LED Reflector Holder round with 5 mm LED

Housing chrome
LED red
Without pre-resistor with exposed LED and external reflector

Housing black dull
LED red
Chalice shape with internal reflector

Housing chrome
LED green
Chalice shape with internal reflector

Housing black dull
LED red
Exposed LED and external reflec

See below:
Approvals and Compliances

Description

- Panel Mounting
- Illumination with 5 mm LED
- available with or without series resistor
- Housing chrome plated or black dull
- Solder terminals

Weblinks

pdf data sheet, html datasheet, CAD-Drawings, Detailed request for product

Technical Data

Electrical Data	
Current consumption	10 mA with Built-in Multiplier
LED	Technical data LED see separate table
Climatical Data	
Allowable Operation Temp.	-25 to 55 °C
Storage Temperature	-55 to 100 °C
Protection Class	IP67

Soldering Data	
Solderability	235 °C / 2 sec acc. to IEC 60068-2-20 , Test Ta, method 1
Resistance to Soldering Heat	350 °C / 5 sec acc. to IEC 60068-2-20 , Test Tb, method 1B
Material	
Housings	Brass chrome-plated
Solder terminals	Tin-Plated Copper
Nut	Nickel-Plated Brass
Sealing	Nitril rubber

Technical Data LED

	LED red	LED green	LED yellow
Let-through courrent DC IF max.	30 mA	30 mA	30 mA
Power Loss PV max.	100 mW	100 mW	100 mW
Forward voltage	typ. 2.0 V; max. 3.0 V	typ. 2.4 V; max. 3.0 V	typ. 2.4 V; max. 3.0 V
Luminous intensity	min. 6.3 mcd; typ. 10 mcd	min. 6.3 mcd; typ. 10 mcd	min. 6.3 mcd; typ. 12 mcd
Viewing angle	60°	60°	60°
Peak wave lenght	typ. 635 nm	typ. 565 nm	typ. 585 nm
Reverse voltage	typ. 15 V	typ. 15 V	typ. 15 V

Approvals and Compliances

Detailed information on product approvals, code requirements, usage instructions and detailed test conditions can be looked up in Details about Approvals

SCHURTER products are designed for use in industrial environments. They have approvals from independent testing bodies according to national and international standards. Products with specific characteristics and requirements such as required in the automotive sector according to IATF 16949, medical technology according to ISO 13485 or in the aerospace industry can be offered exclusively with customer-specific, individual agreements by SCHURTER.

Compliances

The product complies with following Guide Lines

Identification	Details	Initiator	Description
RoHS COMPLIANT	RoHS	SCHURTER AG	Directive RoHS 2011/65/EU, Amendment (EU) 2015/863
REACH	REACH	SCHURTER AG	On 1 June 2007, Regulation (EC) No 1907/2006 on the Registration, Evaluation, Authorization and Restriction of Chemicals 1 (abbreviated as "REACH") entered into force.

Dimension [mm]

LFM with resistor and internal reflector

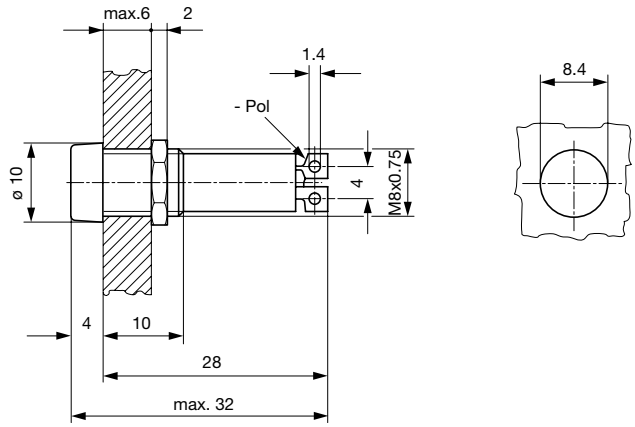

LFM without resistor with internal reflector

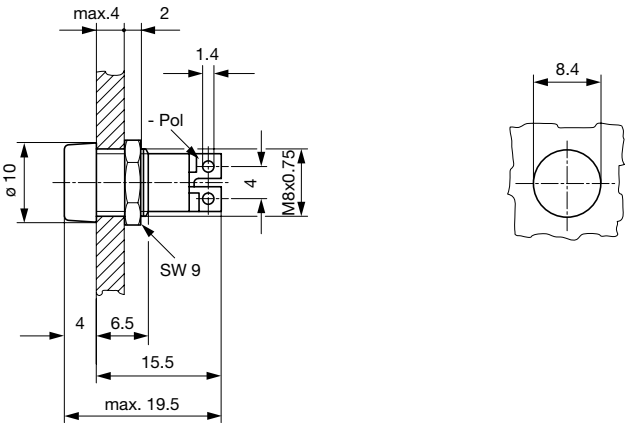

LFM with exposed LED and resistor and external reflector

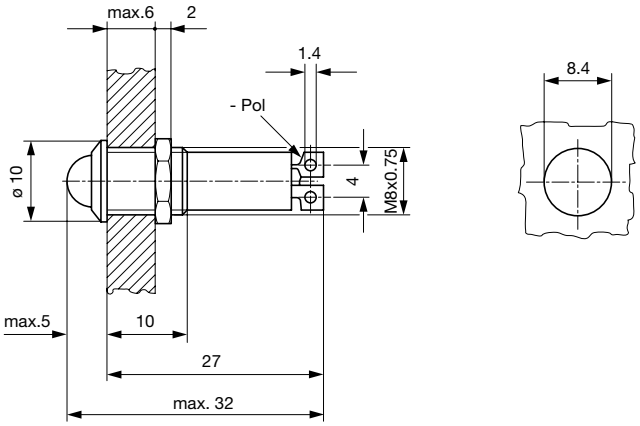

All Variants

Type	Multiplier	Housings	Supply Voltage	Color LED	Order Number
Internal Reflector	with	chrome-plated	24VDC	red	0035.0607
Internal Reflector	with	chrome-plated	24VDC	green	0035.0608
Internal Reflector	with	chrome-plated	24VDC	yellow	0035.0609
Outside Reflector	with	black dull	12VDC	red	0035.0664
Outside Reflector	with	black dull	12VDC	green	0035.0665
Outside Reflector	with	black dull	12VDC	yellow	0035.0666
Outside Reflector	with	black dull	24VDC	red	0035.0667
Outside Reflector	with	black dull	24VDC	green	0035.0668
Outside Reflector	with	black dull	24VDC	yellow	0035.0669
Internal Reflector	without	black dull	-	red	0035.0726
Internal Reflector	without	black dull	-	green	0035.0727

Type	Multiplier	Housings	Supply Voltage	Color LED	Order Number
Internal Reflector	without	black dull	-	yellow	0035.0728

Most Popular.

Availability for all products can be searched real-time:https://www.schurter.com/en/Stock-Check/Stock-Check-SCHURTER

Packaging unit 50 pcs

22.06.2020

The specifications, descriptions and illustrations indicated in this document are based on current information. All content is subject to modifications and amendments. Information furnished is believed to be accurate and reliable. However, users should independently evaluate the suitability and test each product selected for their own applications.

Компания «ЭлектроПласт» предлагает заключение долгосрочных отношений при поставках импортных электронных компонентов на взаимовыгодных условиях!

Наши преимущества:

- Оперативные поставки широкого спектра электронных компонентов отечественного и импортного производства напрямую от производителей и с крупнейших мировых складов;
- Поставка более 17-ти миллионов наименований электронных компонентов;
- Поставка сложных, дефицитных, либо снятых с производства позиций;
- Оперативные сроки поставки под заказ (от 5 рабочих дней);
- Экспресс доставка в любую точку России;
- Техническая поддержка проекта, помощь в подборе аналогов, поставка прототипов;
- Система менеджмента качества сертифицирована по Международному стандарту ISO 9001;
- Лицензия ФСБ на осуществление работ с использованием сведений, составляющих государственную тайну;
- Поставка специализированных компонентов (Xilinx, Altera, Analog Devices, Intersil, Interpoint, Microsemi, Aeroflex, Peregrine, Syfer, Eurofarad, Texas Instrument, Miteq, Cobham, E2V, MA-COM, Hittite, Mini-Circuits,General Dynamics и др.);

Помимо этого, одним из направлений компании «ЭлектроПласт» является направление «Источники питания». Мы предлагаем Вам помощь Конструкторского отдела:

- Подбор оптимального решения, техническое обоснование при выборе компонента;
- Подбор аналогов;
- Консультации по применению компонента;
- Поставка образцов и прототипов;
- Техническая поддержка проекта;
- Защита от снятия компонента с производства.

Как с нами связаться

Телефон: 8 (812) 309 58 32 (многоканальный)
Факс: 8 (812) 320-02-42
Электронная почта: org@eplast1.ru
Адрес: 198099, г. Санкт-Петербург, ул. Калинина, дом 2, корпус 4, литера А.