Innovative Service Around the Globe YAGEO

DATA SHEET

TRIMMABLE CHIP RESISTORS

TR series

0/-10%, 0/-20%, 0/-30%

sizes 0402/0603/0805/1206

RoHS compliant

YAGEO Phycomp

Product specification – Jan 14, 2009 V.1

SCOPE

This specification describes TR0402 to TR1206 trimmable chip resistors with lead-free terminations made by thick film process.

APPLICATIONS

- Hand-held measuring equipment
- Mobile phones
- Camcorders
- Portable radios, CD and cassette
- Tuners
- Photo sensors

FEATURES

- RoHS compliant
  - Products with lead free terminations meet RoHS requirements
  - Pb-glass contained in electrodes, resistor element and glass are exempted by RoHS
- Reducing environmentally hazardous wastes
- High component and equipment reliability
- Saving of PCB space
- None forbidden-materials used in products/production

ORDERING INFORMATION - GLOBAL PART NUMBER & 12NC

Both part numbers are identified by the series, size, tolerance, packing type, temperature coefficient, taping reel and resistance value.

YAGEO BRAND ordering code

GLOBAL PART NUMBER (PREFERRED)

TR XXXX X X X XX XXXX
(1) (2) (3) (4) (5) (6)

(1) SIZE

0402
0603
0805
1206

(2) TOLERANCE

K = 0/-10%
M = 0/-20%
N = 0/-30%

(3) PACKAGING TYPE

R = Paper taping reel

(4) TEMPERATURE COEFFICIENT OF RESISTANCE

– = Base on spec

(5) TAPING REEL

07 = 7 inch dia. Reel

(6) RESISTANCE VALUE

There are 2~4 digits indicated the resistor value. Letter R/K/M is decimal point, no need to mention the last zero after R/K/M, e.g.1K2, not 1K20.

Detailed resistance rules show in table of "Resistance rule of global part number".

(7) OPTIONAL CODE

L = optional symbol (Note)

Resistance rule of global part number

Resistance code rule	Example
XRXX (1 to 9.76 Ω)	1R = 1 Ω 1R5 = 1.5 Ω 9R76 = 9.76 Ω
XXRX (10 to 97.6 Ω)	10R = 10 Ω 97R6 = 97.6 Ω
XXXR (100 to 976 Ω)	100R = 100 Ω
XKXX (1 to 9.76 KΩ)	1K = 1,000 Ω 9K76 = 9760 Ω
XMXX (1 to 9.76 MΩ)	1M = 1,000,000 Ω 9M76= 9,760,000 Ω

ORDERING EXAMPLE

The ordering code of a TR0603 chip resistor, value 330 Ω with 0/-30% tolerance, supplied in 7-inch tape reel is: TR0603NR-07330R(L).

NOTE

1. All our RSMD products meet RoHS compliant. "LFP" of the internal 2D reel label mentions "Lead Free Process"
2. On customized label, "LFP" or specific symbol printed and the optional "L" at the end of GLOBAL PART NUMBER / 12NC can be added (both are on customer request)

PHYCOMP BRAND ordering codes

Both GLOBAL PART NUMBER (preferred) and 12NC (traditional) codes are acceptable to order Phycomp brand products.

GLOBAL PART NUMBER (PREFERRED)

For detailed information of GLOBAL PART NUMBER and ordering example, please refer to page 2.

12NC CODE

2350 XXX XXXXX L
(1) (2) (3) (4)

SIZE	TYPE	START IN (1)	TOL. (%)	RESISTANCE RANGE	PAPER/PE TAPE ON REEL (units) (2) 10,000	5,000/10,000	5,000
0402	RC32TR	2350	0/-10%	1 to 10 MΩ	503 22xxx		-
			0/-20%	1 to 10 MΩ	503 21xxx		-
			0/-30%	1 to 10 MΩ	503 20xxx		-
0603	RC22TR	2350	0/-10%	1 to 10 MΩ	-		502 12xxx
			0/-20%	1 to 10 MΩ	-		502 11xxx
			0/-30%	1 to 10 MΩ	-		502 10xxx
0805	RC12TR	2350	0/-10%	1 to 10 MΩ	-		501 12xxx
			0/-20%	1 to 10 MΩ	-		501 11xxx
			0/-30%	1 to 10 MΩ	-		501 10xxx
1206	RC02TR	2350	0/-10%	1 to 10 MΩ	-		500 12xxx
			0/-20%	1 to 10 MΩ	-		500 11xxx
			0/-30%	1 to 10 MΩ	-		500 10xxx

(1) The resistors have a 12-digit ordering code starting with 2350.

(2) The subsequent 4 or 5 digits indicate the resistor tolerance and packaging.

(3) The remaining 4 or 3 digits represent the resistance value with the last digit indicating the multiplier as shown in the table of "Last digit of 12NC".

(4) "L" is optional symbol (Note).

Last digit of 12NC

Resistance decade (3)	Last digit
0.01 to 0.0976 Ω	0
0.1 to 0.976 Ω	7
1 to 9.76 Ω	8
10 to 97.6 Ω	9
100 to 976 Ω	1
1 to 9.76 KΩ	2
10 to 97.6 KΩ	3
100 to 976 KΩ	4
1 to 9.76 MΩ	5
10 to 97.6 MΩ	6

Example:			
	0.02 Ω	=	0200 or 200
	0.3 Ω	=	3007 or 307
	1 Ω	=	1008 or 108
	33 KΩ	=	3303 or 333
	10 MΩ	=	1006 or 106

ORDERING EXAMPLE

The ordering code of a RC22TR resistor with terminations, value 330 Ω with 0/-30% tolerance, supplied in tape of 5,000 units per reel is: 235050210331(L) or TR0603NR-07330R(L).

NOTE

1. All our RSMD products are RoHS compliant. "LFP" of the internal 2D reel label mentions "Lead Free Process"
2. On customized label, "LFP" or specific symbol printed and the optional "L" at the end of GLOBAL PART NUMBER / 12NC can be added (both are on customer request)

MARKING

TR0402/0603/0805/1206

Fig. 1

No marking

For further marking information, please see special data sheet "Chip resistors marking".

CONSTRUCTION

The resistors are constructed on a high-grade ceramic body (aluminium oxide). Internal metal electrodes are added at each end and a connection is made between them using a resistive metal glaze; the approximate resistor values are dependent on the composition of the glaze.

The resistive layer is covered with a translucent protective coat. Finally, two end electrodes are added, the composition of which has been designed to provide ease of soldering. See fig. 2.

OUTLINES

For dimension see Table 1

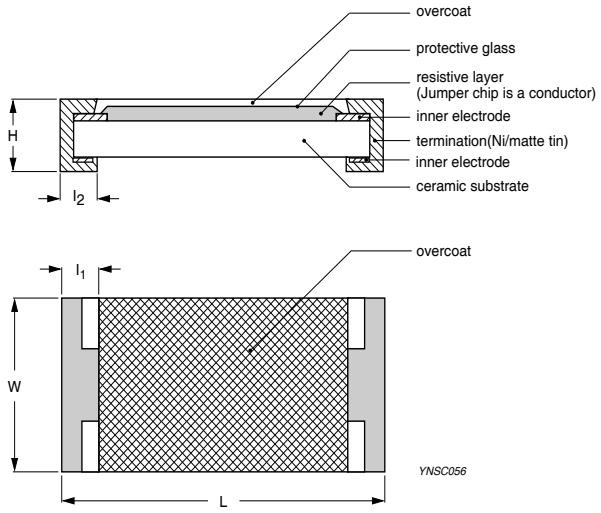

Fig. 2 Chip resistor outlines

DIMENSIONS

Table 1 For outlines see fig. 2

TYPE	L (mm)	W (mm)	H (mm)	l_1 (mm)	l_2 (mm)
TR0402	1.00 ±0.10	0.50 ±0.05	0.35 ±0.05	0.20 ±0.10	0.25 ±0.10
TR0603	1.60 ±0.10	0.80 ±0.10	0.45 ±0.10	0.25 ±0.15	0.25 ±0.15
TR0805	2.00 ±0.10	1.25 ±0.10	0.50 ±0.10	0.35 ±0.20	0.35 ±0.20
TR1206	3.10 ±0.10	1.60 ±0.10	0.55 ±0.10	0.45 ±0.20	0.40 ±0.20

ELECTRICAL CHARACTERISTICS

Table 2

TYPE	RESISTANCE RANGE	CHARACTERISTICS					
		Rated Power	Operating Temperature Range	Max. Working Voltage	Max. Overload Voltage	Dielectric Withstanding Voltage	Temperature Coefficient of Resistance
TR0402	0/-10%, 0/-20%, 0/-30%: 1 Ω to 10 MΩ (E-24)	1/16 W	–55 °C to +125 °C	50 V	100 V	100 V	1 Ω ≤ R ≤ 10 Ω: ±200 ppm/°C 10 Ω < R ≤ 1 MΩ: ±100 ppm/°C 1 MΩ < R ≤ 10 MΩ: ±200 ppm/°C
TR0603		1/16 W		50 V	100 V	100 V	
TR0805		1/8 W	–55 °C to +155 °C	150 V	300 V	500 V	
TR1206		1/4 W		200 V	500 V	500 V	

FOOTPRINT AND SOLDERING PROFILES

For recommended footprint and soldering profiles, please see the special data sheet "Chip resistors mounting".

PACKING STYLE AND PACKAGING QUANTITY

Table 3 Packing style and packaging quantity

PACKING STYLE	REEL DIMENSION	TR0402	TR0603	TR0805	TR1206
Paper taping reel (R)	7" (178 mm)	10,000	5,000	5,000	5,000

NOTE

1. For Paper tape and reel specification/dimensions, please see the special data sheet "Chip resistors packing".

FUNCTIONAL DESCRIPTION

OPERATING TEMPERATURE RANGE

Each type range:

TR0402/0603: –55°C to +125°C;
TR0805/1206: –55°C to +155°C.

POWER RATING

Each type rated power at 70°C:

TR0402=1/16 W; TR0603=1/16 W;
TR0805=1/8 W; TR1206=1/4 W.

RATED VOLTAGE

The DC or AC (rms) continuous working voltage corresponding to the rated power is determined by the following formula:

$V = \sqrt{(P \times R)}$
or max. working voltage whichever is less

Where

V = Continuous rated DC or AC (rms) working voltage (V)

P = Rated power (W)

R = Resistance value (Ω)

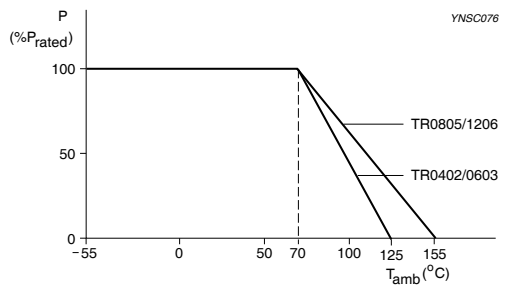

Fig. 3 Maximum dissipation (P_{max}) in percentage of rated power as a function of the operating ambient temperature (T_{amb})

TESTS AND REQUIREMENTS

Table 4 Test condition, procedure and requirements

TEST	TEST METHOD	PROCEDURE	REQUIREMENTS
Life/ Operational Life/ Endurance	MIL-STD-202G-method 108A IEC 60115-1 4.25.1 JIS C 5202-7.10	1,000 hours at 70±5 °C applied RCWV 1.5 hours on, 0.5 hour off, still air required	±(2%+0.05 Ω)
High Temperature Exposure/ Endurance at upper category temperature	MIL-STD-202G-method 108A IEC 60115-1 4.25.3 JIS C 5202-7.11	1,000 hours at maximum operating temperature depending on specification, unpowered No direct impingement of forced air to the parts Tolerances: 155±3 °C	±(1%+0.05 Ω)
Moisture Resistance	MIL-STD-202G-method 106F IEC 60115-1 4.24.2	Each temperature / humidity cycle is defined at 8 hours (method 106F), 3 cycles / 24 hours for 10d with 25 °C / 65 °C 95% R.H, without steps 7a & 7b, unpowered Parts mounted on test-boards, without condensation on parts Measurement at 24±2 hours after test conclusion	±(2%+0.05 Ω)
Thermal Shock	MIL-STD-202G-method 107G	AR0402/0603: -55/+155 °C AR0805/1206: -55/+125 °C Note: Number of cycles required is 300. Devices unmounted Maximum transfer time is 20 seconds. Dwell time is 15 minutes. Air – Air	±(0.5%+0.05 Ω) for 10 KΩ to 10 MΩ ±(1%+0.05 Ω) for others
Short time overload	MIL-R-55342D-para 4.7.5 IEC60115-1 4.13	2.5 times RCWV or maximum overload voltage whichever is less for 5 sec at room temperature	±(2%+0.05 Ω) No visible damage
Board Flex/ Bending	IEC60115-1 4.33	Device mounted on PCB test board as described, only 1 board bending required 3 mm bending Bending time: 60±5 seconds Ohmic value checked during bending	±(1%+0.05 Ω) No visible damage

TEST	TEST METHOD	PROCEDURE	REQUIREMENTS
Solderability - Wetting	IPC/JEDECJ-STD-002B test B IEC 60068-2-58	Electrical Test not required Magnification 50X SMD conditions: 1st step: method B, aging 4 hours at 155 °C dry heat 2nd step: leadfree solder bath at 245±3 °C Dipping time: 3±0.5 seconds	Well tinned (≥95% covered) No visible damage
- Leaching	IPC/JEDECJ-STD-002B test D IEC 60068-2-58	Leadfree solder, 260 °C, 30 seconds immersion time	No visible damage
- Resistance to Soldering Heat	MIL-STD-202G-method 210F IEC 60068-2-58	Condition B, no pre-heat of samples Leadfree solder, 270 °C, 10 seconds immersion time Procedure 2 for SMD: devices fluxed and cleaned with isopropanol	±(1%+0.05 Ω) No visible damage

REVISION HISTORY

REVISION	DATE	CHANGE NOTIFICATION	DESCRIPTION
Version 1	Jan 14, 2009	-	- Change to dual brand datasheet that describes TR0402 to TR1206 with RoHS compliant - Define global part number
Version 0	Oct 18, 2005	-	- New datasheet for trimmable chip resistors sizes of 0402/0603/0805/1206, 0/-10%, 0/-20, and 0/-30% tolerance with lead-free terminations - Replace the 0603/0805/1206 parts of pdf files: RC02TR_12TR_9.pdf, RC22_TR_3.pdf, and combine into a document. - Test method and procedure updated - PE tape added (paper tape will be replaced by PE tape)

" Yageo reserves all the rights for revising the content of this datasheet without further notification, as long as the products itself are unchanged. Any product change will be announced by PCN."

Mouser Electronics

Authorized Distributor

Click to View Pricing, Inventory, Delivery & Lifecycle Information:

Yageo:

TR0603MR-0710RL TR0603MR-074R7L TR0805MR-07150RL TR0603NR-07390RL TR1206NR-0715KL TR1206MR-0782RL TR0603NR-0720RL TR0805NR-0791KL TR1206NR-0756KL TR0805NR-07820RL TR1206KR-0791KL TR0603KR-07100RL TR1206NR-07470RL TR1206KR-07120RL TR0603NR-0791KL TR0603NR-07270RL TR0603NR-07620KL TR0805KR-07300RL TR1206NR-072K4L TR0603KR-0710KL TR0603NR-071RL TR1206MR-07160RL TR0603MR-0715RL TR1206NR-076K2L TR0805MR-0782RL TR0603MR-0768RL TR1206MR-0747KL TR0805MR-074K3L TR1206NR-07100RL TR1206NR-072K2L TR0603MR-07300RL TR0603KR-07360RL TR0603MR-072KL TR0805KR-076R2L TR0603KR-07390RL TR0805NR-07120RL TR0805MR-071K1L TR1206NR-071K5L TR0805NR-0762RL TR1206MR-074K3L TR1206NR-0724KL TR1206NR-071K2L TR0603KR-071ML TR1206MR-07820RL TR0805MR-07200RL TR0603MR-073R9L TR0603KR-074K7L TR0603MR-07180RL TR0805KR-079K1L TR1206KR-0768KL TR1206NR-072R7L TR1206NR-0733KL TR0603KR-07180RL TR0805MR-0724KL TR1206KR-07100KL TR0805MR-071KL TR0603NR-072K4L TR0805NR-071KL TR1206MR-07390RL TR0805KR-075K1L TR0805MR-07270RL TR0603MR-0782RL TR1206KR-074K7L TR1206NR-0710RL TR0603MR-071KL TR0603MR-071K1L TR0603KR-0718KL TR0805MR-07470RL TR1206KR-075K6L TR1206KR-07270RL TR1206MR-072K2L TR1206KR-078K2L TR0805MR-0722KL TR0805KR-072K2L TR0805MR-071K5L TR1206KR-07120KL TR1206MR-0782KL TR0603MR-07220RL TR1206KR-0747KL TR1206MR-07120KL TR0805MR-072R2L TR1206NR-07150RL TR1206MR-0720RL TR0805NR-0747RL TR0402KR-0722RL TR0805MR-07180RL TR1206MR-07510RL TR0603NR-07750KL TR1206KR-071RL TR1206KR-0716KL TR0603KR-071R5L TR0805MR-07330RL TR0603MR-0747RL TR0805KR-0791KL TR0603MR-078K2L TR1206NR-07680RL TR0805KR-0730KL TR0603MR-07560RL TR1206MR-07100KL TR0603MR-07680KL

Компания «ЭлектроПласт» предлагает заключение долгосрочных отношений при поставках импортных электронных компонентов на взаимовыгодных условиях!

Наши преимущества:

- Оперативные поставки широкого спектра электронных компонентов отечественного и импортного производства напрямую от производителей и с крупнейших мировых складов;
- Поставка более 17-ти миллионов наименований электронных компонентов;
- Поставка сложных, дефицитных, либо снятых с производства позиций;
- Оперативные сроки поставки под заказ (от 5 рабочих дней);
- Экспресс доставка в любую точку России;
- Техническая поддержка проекта, помощь в подборе аналогов, поставка прототипов;
- Система менеджмента качества сертифицирована по Международному стандарту ISO 9001;
- Лицензия ФСБ на осуществление работ с использованием сведений, составляющих государственную тайну;
- Поставка специализированных компонентов (Xilinx, Altera, Analog Devices, Intersil, Interpoint, Microsemi, Aeroflex, Peregrine, Syfer, Eurofarad, Texas Instrument, Miteq, Cobham, E2V, MA-COM, Hittite, Mini-Circuits,General Dynamics и др.);

Помимо этого, одним из направлений компании «ЭлектроПласт» является направление «Источники питания». Мы предлагаем Вам помощь Конструкторского отдела:

- Подбор оптимального решения, техническое обоснование при выборе компонента;
- Подбор аналогов;
- Консультации по применению компонента;
- Поставка образцов и прототипов;
- Техническая поддержка проекта;
- Защита от снятия компонента с производства.

Как с нами связаться

Телефон: 8 (812) 309 58 32 (многоканальный)
Факс: 8 (812) 320-02-42
Электронная почта: org@eplast1.ru
Адрес: 198099, г. Санкт-Петербург, ул. Калинина, дом 2, корпус 4, литера А.