Laird TECHNOLOGIES®

Innovative **Technology** for a **Connected** World

Slot Mount Series
Fingerstock Gaskets

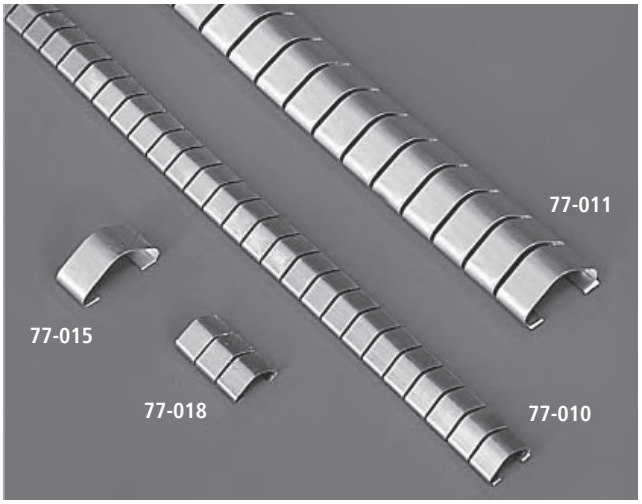

FINGERSTOCK GASKETS AND METAL GROUNDING PRODUCTS

As the world's leading fabricator of fingerstock, Laird Technologies has developed highly sophisticated, and often proprietary, shielding and grounding technology.

Our innovations are necessary to achieve outstanding combinations of performance parameters. From a vast selection of product configurations, platings and mounting techniques, to a full range of low compression force requirements and high transfer impedance characteristics, there is a Laird Technologies gasket or grounding product just right for the job.

Laird Technologies' Slot Mount Series of beryllium copper shielding gaskets is designed for use in a wide variety of slotted applications. This economical product line is ideal for both grounding and shielding applications.

FEATURES

- Minimal slot fabrication cost
- Easy and cost-effective installation since fasteners and adhesives are not required
- Bi-directional wiping and compression action to accommodate a wide variety of designs
- The Slot Mount Series is available in your choice of finishes
- Ideal for grounding and shielding in the following electronic enclosure applications:
  - Front panel handles – Chassis covers
  - Plug-in units – Backplanes
  - Subrack assemblies
- Standard (77-Series) and UltraSoft® (78-Series low compression versions) are also supplied in 25.0 ft. (7.6 m) coils

global solutions: local support™

USA: +1.866.928.8181
Europe: +49.0.8031.2460.0
Asia: +86.755.2714.1166

www.lairdtech.com

Laird TECHNOLOGIES

Innovative **Technology** for a **Connected** World

Slot Mount Series
Fingerstock Gaskets

FINGERSTOCK DIMENSIONS

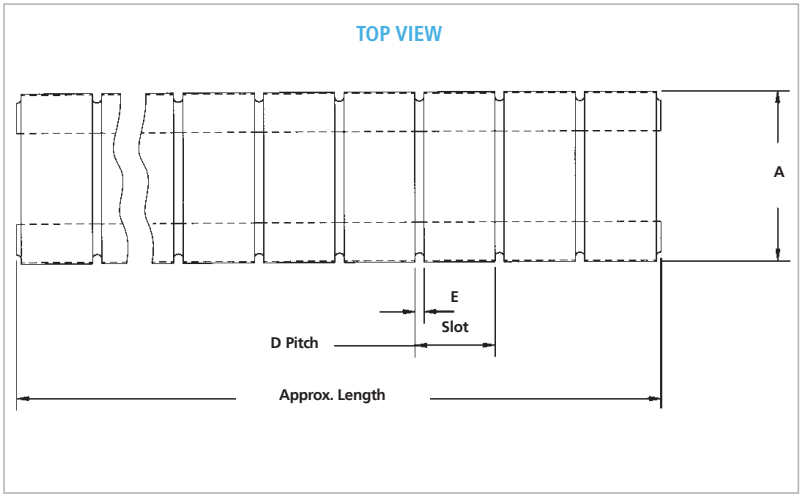

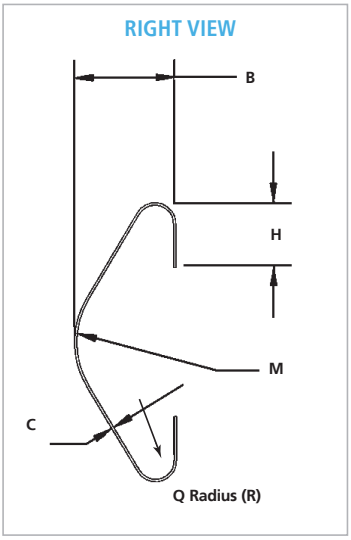

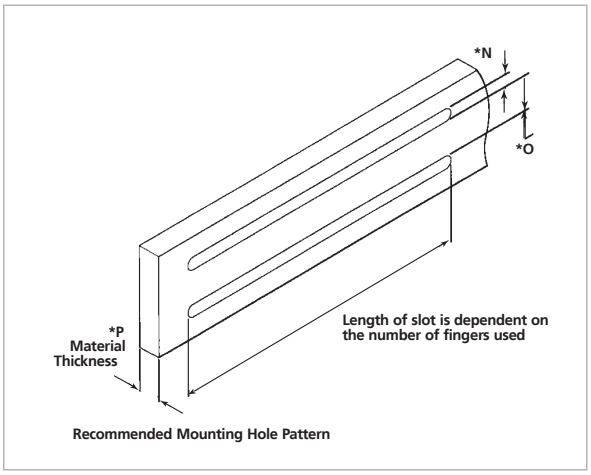

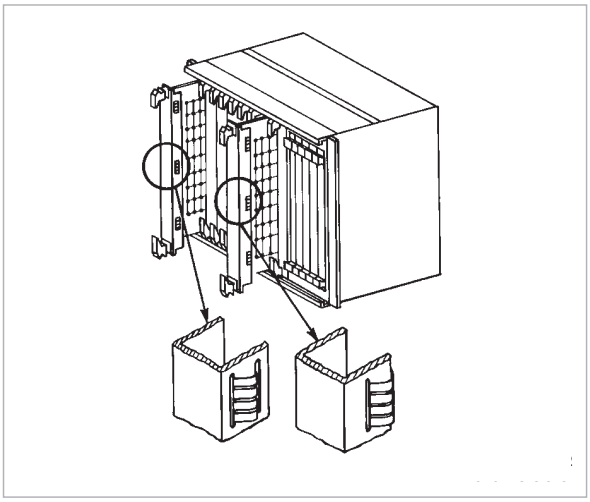

Laird TECHNOLOGIES®

Innovative **Technology** for a **Connected** World

Slot Mount Series
Fingerstock Gaskets

FINGERSTOCK DIMENSIONS

SERIES	A	B	C	D	E	H	M	*N	*O	*P	Q (R)	LENGTH APPROX	# OF FING
								RECOMMENDED					
77-010	0.320	0.110	0.004	0.187	0.018	0.085	0.110	0.090	0.260	0.040	0.020	16.000	86
	(8.128)	(2.794)	(0.102)	(4.750)	(0.457)	(2.159)	(2.794)	(2.286)	(6.604)	(1.016)	(0.508)	(406.400)	—
77-011	0.600	0.220	0.005	0.282	0.032	0.140	0.180	0.140	0.520	0.070	0.040	16.000	57
	(15.240)	(5.588)	(0.127)	(7.163)	(0.813)	(3.556)	(4.572)	(3.556)	(13.208)	(1.778)	(1.016)	(406.400)	—
77-015	0.600	0.220	0.005	N/A	N/A	0.140	0.180	0.140	0.520	0.070	0.040	0.250	1
	(15.240)	(5.588)	(0.127)	—	—	(3.556)	(4.572)	(3.556)	(13.208)	(1.778)	(1.016)	(6.350)	—
77-016	0.320	0.110	0.004	N/A	N/A	0.085	0.110	0.090	0.260	0.040	0.020	0.169	1
	(8.128)	(2.794)	(0.102)	—	—	(2.159)	(2.794)	(2.286)	(6.604)	(1.016)	(0.508)	(4.293)	—
77-017	0.320	0.110	0.004	0.187	0.018	0.085	0.110	0.090	0.260	0.040	0.020	0.356	2
	(8.128)	(2.794)	(0.102)	(4.750)	(0.457)	(2.159)	(2.794)	(2.286)	(6.604)	(1.016)	(0.508)	(9.042)	—
77-018	0.320	0.110	0.004	0.187	0.018	0.085	0.110	0.090	0.260	0.040	0.020	0.543	3
	(8.128)	(2.794)	(0.102)	(4.750)	(0.457)	(2.159)	(2.794)	(2.286)	(6.604)	(1.016)	(0.508)	(13.792)	—
77-019	0.320	0.110	0.004	0.187	0.018	0.085	0.110	0.090	0.260	0.040	0.020	0.730	4
	(8.128)	(2.794)	(0.102)	(4.750)	(0.457)	(2.159)	(2.794)	(2.286)	(6.604)	(1.016)	(0.508)	(18.542)	—
77-020	0.600	0.220	0.005	0.282	0.032	0.140	0.180	0.140	0.520	0.070	0.040	0.532	2
	(15.240)	(5.588)	(0.127)	(7.163)	(0.813)	(3.556)	(4.572)	(3.556)	(13.208)	(1.778)	(1.016)	(13.513)	—
77-021	0.320	0.110	0.004	0.187	0.018	0.085	0.110	0.090	0.260	0.060	0.035	16.000	86
	(8.128)	(2.794)	(0.102)	(4.750)	(0.457)	(2.159)	(2.794)	(2.286)	(6.604)	(1.524)	(0.889)	(406.400)	—
77-023	0.370	0.130	0.004	N/A	N/A	0.085	0.110	0.090	0.300	0.040	0.020	0.225	1
	(9.398)	(3.302)	(0.102)	—	—	(2.159)	(2.794)	(2.286)	(7.620)	(1.016)	(0.508)	(5.715)	—
77-024	0.370	0.130	0.004	0.250	0.025	0.085	0.110	0.090	0.300	0.040	0.020	0.475	2
	(9.398)	(3.302)	(0.102)	(6.350)	(0.635)	(2.159)	(2.794)	(2.286)	(7.620)	(1.016)	(0.508)	(12.065)	—
77-025	0.370	0.130	0.004	0.250	0.025	0.085	0.110	0.090	0.300	0.040	0.020	0.725	3
	(9.398)	(3.302)	(0.102)	(6.350)	(0.635)	(2.159)	(2.794)	(2.286)	(7.620)	(1.016)	(0.508)	(18.415)	—
77-026	0.370	0.130	0.005	0.250	0.025	0.085	0.110	0.090	0.300	0.040	0.020	0.975	4
	(9.398)	(3.302)	(0.127)	(6.350)	(0.635)	(2.159)	(2.794)	(2.286)	(7.620)	(1.016)	(0.508)	(24.765)	—
77-027	0.370	0.130	0.005	0.250	0.025	0.085	0.110	0.090	0.300	0.040	0.020	1.225	5
	(9.398)	(3.302)	(0.127)	(6.350)	(0.635)	(2.159)	(2.794)	(2.286)	(7.620)	(1.016)	(0.508)	(31.115)	—
77-028	0.370	0.130	0.005	0.250	0.025	0.085	0.110	0.090	0.300	0.040	0.020	1.475	6
	(9.398)	(3.302)	(0.127)	(6.350)	(0.635)	(2.159)	(2.794)	(2.286)	(7.620)	(1.016)	(0.508)	(37.465)	—
77-029	0.800	0.320	0.004	N/A	N/A	0.200	0.180	0.220	0.720	0.070	0.040	0.343	1
	(20.320)	(8.128)	(0.102)	—	—	(5.080)	(4.572)	(5.588)	(18.288)	(1.778)	(1.016)	(8.712)	—
77-030	0.800	0.320	0.004	0.375	0.032	0.200	0.180	0.220	0.720	0.070	0.040	0.718	2
	(20.320)	(8.128)	(0.102)	(9.525)	(0.813)	(5.080)	(4.572)	(5.588)	(18.288)	(1.778)	(1.016)	(18.237)	—
77-031	0.800	0.320	0.005	0.375	0.032	0.200	0.180	0.220	0.720	0.070	0.040	1.093	3
	(20.320)	(8.128)	(0.127)	(9.525)	(0.813)	(5.080)	(4.572)	(5.588)	(18.288)	(1.778)	(1.016)	(27.762)	—
77-032	0.800	0.320	0.005	0.375	0.032	0.200	0.180	0.220	0.720	0.070	0.040	1.468	4
	(20.320)	(8.128)	(0.127)	(9.525)	(0.813)	(5.080)	(4.572)	(5.588)	(18.288)	(1.778)	(1.016)	(37.287)	—
77-035	0.310	0.120	0.003	0.250	0.020	0.090	0.115	0.095	0.250	0.040	0.015	0.480	2
	(7.874)	(3.048)	(0.076)	(6.350)	(0.508)	(2.286)	(2.921)	(2.413)	(6.350)	(1.016)	(0.381)	(12.192)	—
77-036	0.310	0.120	0.003	0.250	0.020	0.090	0.115	0.095	0.250	0.040	0.015	0.980	4
	(7.874)	(3.048)	(0.076)	(6.350)	(0.508)	(2.286)	(2.921)	(2.413)	(6.350)	(1.016)	(0.381)	(24.892)	—
77-037	0.310	0.120	0.003	0.250	0.020	0.090	0.115	0.095	0.250	0.040	0.015	1.480	6
	(7.874)	(3.048)	(0.076)	(6.350)	(0.508)	(2.286)	(2.921)	(2.413)	(6.350)	(1.016)	(0.381)	(37.592)	—
77-038	0.310	0.120	0.003	0.250	0.020	0.090	0.115	0.095	0.250	0.040	0.015	1.980	8
	(7.874)	(3.048)	(0.076)	(6.350)	(0.508)	(2.286)	(2.921)	(2.413)	(6.350)	(1.016)	(0.381)	(50.292)	—
77-039	0.280	0.110	0.002	N/A	N/A	0.075	0.110	0.090	0.220	0.040	0.030	0.169	1
	(7.112)	(2.794)	(0.051)	—	—	(1.905)	(2.794)	(2.286)	(5.588)	(1.016)	(0.762)	(4.293)	—
77-040	0.280	0.110	0.002	0.187	0.018	0.075	0.110	0.090	0.220	0.040	0.030	0.356	2
	(7.112)	(2.794)	(0.051)	(4.750)	(0.457)	(1.905)	(2.794)	(2.286)	(5.588)	(1.016)	(0.762)	(9.042)	—
77-041	0.280	0.110	0.002	0.187	0.018	0.075	0.110	0.090	0.220	0.040	0.030	0.543	3
	(7.112)	(2.794)	(0.051)	(4.750)	(0.457)	(1.905)	(2.794)	(2.286)	(5.588)	(1.016)	(0.762)	(13.792)	—
77-042	0.280	0.110	0.002	0.187	0.018	0.075	0.110	0.090	0.220	0.040	0.030	0.730	4
	(7.112)	(2.794)	(0.051)	(4.750)	(0.457)	(1.905)	(2.794)	(2.286)	(5.588)	(1.016)	(0.762)	(18.542)	—
77-044	0.320	0.110	0.004	0.187	0.018	0.085	0.110	0.090	0.260	0.040	0.020	1.104	6
	(8.128)	(2.794)	(0.102)	(4.750)	(0.457)	(2.159)	(2.794)	(2.286)	(6.604)	(1.016)	(0.508)	(28.042)	—

SERIES	A	B	C	D	E	H	M	*N	*O	*P	Q (R)	LENGTH APPROX	# OF FING
								RECOMMENDED					
77-045	0.320	0.110	0.004	N/A	N/A	0.085	0.110	0.090	0.260	0.060	0.040	0.169	1
	(8.128)	(2.794)	(0.102)	—	—	(2.159)	(2.794)	(2.286)	(6.604)	(1.524)	(1.016)	(4.293)	—
77-046	0.320	0.110	0.004	0.187	0.018	0.085	0.110	0.090	0.260	0.060	0.040	0.356	2
	(8.128)	(2.794)	(0.102)	(4.750)	(0.457)	(2.159)	(2.794)	(2.286)	(6.604)	(1.524)	(1.016)	(9.042)	—
77-047	0.320	0.110	0.004	0.187	0.018	0.085	0.110	0.090	0.260	0.060	0.040	0.543	3
	(8.128)	(2.794)	(0.102)	(4.750)	(0.457)	(2.159)	(2.794)	(2.286)	(6604)	(1.524)	(1.016)	(13.792)	—
77-048	0.320	0.110	0.004	0.187	0.018	0.085	0.110	0.090	0.260	0.060	0.040	0.730	4
	(8.128)	(2.794)	(0.102)	(4.750)	(0.457)	(2.159)	(2.794)	(2.286)	(6.604)	(1.524)	(1.016)	(18.542)	—
77-050	0.320	0.110	0.004	0.187	0.018	0.085	0.110	0.090	0.260	0.060	0.040	0.917	5
	(8.128)	(2.794)	(0.102)	(4.750)	(0.457)	(2.159)	(2.794)	(2.286)	(6.604)	(1.524)	(1.016)	(23.292)	—
77-051	0.320	0.110	0.004	0.187	0.018	0.085	0.110	0.090	0.260	0.060	0.040	1.104	6
	(8.128)	(2.794)	(0.102)	(4.750)	(0.457)	(2.159)	(2.794)	(2.286)	(6.604)	(1.524)	(1.016)	(28.042)	—
77-052	0.320	0.110	0.004	0.187	0.018	0.085	0.110	0.090	0.260	0.060	0.040	1.291	7
	(8.128)	(2.794)	(0.102)	(4.750)	(0.457)	(2.159)	(2.794)	(2.286)	(6.604)	(1.524)	(1.016)	(32.791)	—
77-053	0.320	0.110	0.004	0.187	0.018	0.085	0.110	0.090	0.260	0.060	0.040	1.478	8
	(8.128)	(2.794)	(0.102)	(4.750)	(0.457)	(2.159)	(2.794)	(2.286)	(6.604)	(1.524)	(1.016)	(37.541)	—
77-054	0.320	0.110	0.004	0.187	0.018	0.085	0.110	0.090	0.260	0.060	0.040	1.665	9
	(8.128)	(2.794)	(0.102)	(4.750)	(0.457)	(2.159)	(2.794)	(2.286)	(6.604)	(1.524)	(1.016)	(42.291)	—
77-055	0.320	0.110	0.004	0.187	0.018	0.085	0.110	0.090	0.260	0.060	0.040	1.852	10
	(8.128)	(2.794)	(0.102)	(4.750)	(0.457)	(2.159)	(2.794)	(2.286)	(6.604)	(1.524)	(1.016)	(47.041)	—
77-058	0.320	0.110	0.004	0.187	0.018	0.085	0.110	0.090	0.260	0.040	0.020	0.917	5
	(8.128)	(2.794)	(0.102)	(4.750)	(0.457)	(2.159)	(2.794)	(2.286)	(6.604)	(1.016)	(0.508)	(23.292)	—
77-059	0.370	0.130	0.004	0.250	0.025	0.085	0.110	0.090	0.310	0.040	0.020	16.000	64
	(9.398)	(3.302)	(0.102)	(6.350)	(0.635)	(2.159)	(2.794)	(2.286)	(7.874)	(1.016)	(0.508)	(406.400)	—
77-062	0.320	0.110	0.004	0.187	0.018	0.085	0.110	0.090	0.260	0.048	0.025	0.169	1
	(8.128)	(2.794)	(0.102)	(4.750)	(0.457)	(2.159)	(2.794)	(2.286)	(6.604)	(1.219)	(0.635)	(4.293)	—
77-063	0.320	0.110	0.004	0.187	0.018	0.085	0.110	0.090	0.260	0.048	0.025	0.356	2
	(8.128)	(2.794)	(0.102)	(4.750)	(0.457)	(2.159)	(2.794)	(2.286)	(6.604)	(1.219)	(0.635)	(9.042)	—
77-064	0.320	0.110	0.004	0.187	0.018	0.085	0.110	0.090	0.260	0.048	0.025	0.543	3
	(8.128)	(2.794)	(0.102)	(4.750)	(0.457)	(2.159)	(2.794)	(2.286)	(6.604)	(1.219)	(0.635)	(13.792)	—
77-065	0.320	0.110	0.004	0.187	0.018	0.085	0.110	0.090	0.260	0.048	0.025	0.730	4
	(8.128)	(2.794)	(0.102)	(4.750)	(0.457)	(2.159)	(2.794)	(2.286)	(6.604)	(1.219)	(0.635)	(18.542)	—
77-070	0.320	0.110	0.004	0.187	0.018	0.085	0.110	0.090	0.260	0.062	0.035	16.000	86
	(8.128)	(2.794)	(0.102)	(4.750)	(0.457)	(2.159)	(2.794)	(2.286)	(6.604)	(1.575)	(0.889)	(406.400)	—
77-076	0.600	0.220	0.005	N/A	N/A	0.140	0.180	0.140	0.520	0.070	0.020	0.340	1
	(15.240)	(5.588)	(0.127)	—	—	(3.556)	(4.572)	(3.556)	(13.208)	(1.778)	(0.508)	(8.636)	—
77-087	0.563	0.110	0.003	0.187	0.018	0.085	0.110	0.090	0.260	0.040	0.020	1.291	7
	(14.300)	(2.794)	(0.076)	(4.750)	(0.457)	(2.159)	(2.794)	(2.286)	(6.604)	(1.016)	(0.508)	(32.791)	—
77-088	0.563	0.110	0.003	0.187	0.018	0.085	0.110	0.090	0.260	0.040	0.020	1.478	8
	(14.300)	(2.794)	(0.076)	(4.750)	(0.457)	(2.159)	(2.794)	(2.286)	(6.604)	(1.016)	(0.508)	(37.541)	—
77-089	0.600	0.220	0.005	0.282	0.032	0.140	0.180	0.140	0.520	0.070	0.040	0.810	3
	(15.240)	(5.588)	(0.127)	(7.163)	(0.813)	(3.556)	(4.572)	(3.556)	(13.208)	(1.778)	(1.016)	(20.574)	—
77-094	0.358	0.128	0.003	0.202	0.018	0.110	0.100	0.115	0.300	0.030	0.030	0.389	2
	(9.093)	(3.251)	(0.076)	(5.131)	(0.457)	(2.794)	(2.54)	(2.921)	(7.620)	(0.762)	(0.762)	(9.881)	—
77-096	0.600	0.220	0.005	0.282	0.032	0.140	0.180	0.095	0.520	0.040	0.040	1.096	4
	(15.240)	(5.588)	(0.127)	(7.163)	(0.813)	(3.556)	(4.572)	(2.413)	(13.208)	(1.016)	(1.016)	(27.838)	—
77-097	0.600	0.220	0.005	0.375	0.032	0.140	0.180	0.140	0.520	0.070	0.040	16.000	43
	(15.240)	(5.588)	(0.127)	(9.525)	(0.813)	(3.556)	(4.572)	(3.556)	(13.208)	(1.778)	(1.016)	(406.400)	—
77-099	0.600	0.220	0.005	0.375	0.032	0.140	0.180	0.140	0.520	0.070	0.040	1.378	5
	(15.240)	(5.588)	(0.127)	(9.525)	(0.813)	(3.556)	(4.572)	(3.556)	(13.208)	(1.778)	(1.016)	(35.001)	—
77-100	0.600	0.220	0.005	0.375	0.032	0.140	0.180	0.140	0.520	0.070	0.040	1.660	6
	(15.240)	(5.588)	(0.127)	(9.525)	(0.813)	(3.556)	(4.572)	(3.556)	(13.208)	(1.778)	(1.016)	(42.164)	—
77-101	0.600	0.220	0.005	0.375	0.032	0.140	0.180	0.140	0.520	0.070	0.040	1.942	7
	(15.240)	(5.588)	(0.127)	(9.525)	(0.813)	(3.556)	(4.572)	(3.556)	(13.208)	(1.778)	(1.016)	(49.327)	—

* May vary depending upon application.

Any information furnished by Laird Technologies, Inc. and its agents is believed to be accurate and reliable. All specifications are subject to change without notice. Responsibility for the use and application of Laird Technologies materials rests with the end user. Laird Technologies makes no warranties as to the fitness, merchantability, suitability or non-infringement of any Laird Technologies materials or products for any specific or general uses. Laird Technologies shall not be liable for incidental or consequential damages of any kind. All Laird Technologies products are sold pursuant to the Laird Technologies' Terms and Conditions of sale in effect from time to time, a copy of which will be furnished upon request. © Copyright 2011 Laird Technologies, Inc. All Rights Reserved. Laird, Laird Technologies, the Laird Technologies Logo, and other marks are trade marks or registered trade marks of Laird Technologies, Inc. or an affiliate company thereof. Other product or service names may be the property of third parties. Nothing herein provides a license under any Laird Technologies or any third party intellectual property rights.

Компания «ЭлектроПласт» предлагает заключение долгосрочных отношений при поставках импортных электронных компонентов на взаимовыгодных условиях!

Наши преимущества:

- Оперативные поставки широкого спектра электронных компонентов отечественного и импортного производства напрямую от производителей и с крупнейших мировых складов;
- Поставка более 17-ти миллионов наименований электронных компонентов;
- Поставка сложных, дефицитных, либо снятых с производства позиций;
- Оперативные сроки поставки под заказ (от 5 рабочих дней);
- Экспресс доставка в любую точку России;
- Техническая поддержка проекта, помощь в подборе аналогов, поставка прототипов;
- Система менеджмента качества сертифицирована по Международному стандарту ISO 9001;
- Лицензия ФСБ на осуществление работ с использованием сведений, составляющих государственную тайну;
- Поставка специализированных компонентов (Xilinx, Altera, Analog Devices, Intersil, Interpoint, Microsemi, Aeroflex, Peregrine, Syfer, Eurofarad, Texas Instrument, Miteq, Cobham, E2V, MA-COM, Hittite, Mini-Circuits,General Dynamics и др.);

Помимо этого, одним из направлений компании «ЭлектроПласт» является направление «Источники питания». Мы предлагаем Вам помощь Конструкторского отдела:

- Подбор оптимального решения, техническое обоснование при выборе компонента;
- Подбор аналогов;
- Консультации по применению компонента;
- Поставка образцов и прототипов;
- Техническая поддержка проекта;
- Защита от снятия компонента с производства.

Как с нами связаться

Телефон: 8 (812) 309 58 32 (многоканальный)
Факс: 8 (812) 320-02-42
Электронная почта: org@eplast1.ru
Адрес: 198099, г. Санкт-Петербург, ул. Калинина, дом 2, корпус 4, литера А.