# S-8211C Series

## BATTERY PROTECTION IC FOR 1-CELL PACK

© ABLIC Inc., 2004-2015

Rev.7.7_03

The S-8211C Series is a protection IC for 1-cell lithium-ion / lithium polymer rechargeable battery and includes high-accuracy voltage detection circuits and delay circuits.
The S-8211C Series is suitable for protecting 1-cell lithium-ion / lithium polymer rechargeable battery packs from overcharge, overdischarge, and overcurrent.

## ■ Features

- High-accuracy voltage detection circuit

| | | |
|---|---|---|
| Overcharge detection voltage | 3.9 V to 4.5 V (5 mV step) | Accuracy ±25 mV (Ta = +25°C) |
| | | Accuracy ±30 mV (Ta = −5°C to +55°C) |
| Overcharge release voltage | 3.8 V to 4.43 V*1 | Accuracy ±50 mV |
| Overdischarge detection voltage | 2.0 V to 3.0 V (10 mV step) | Accuracy ±50 mV |
| Overdischarge release voltage | 2.0 V to 3.4 V*2 | Accuracy ±100 mV |
| Discharge overcurrent detection voltage | 0.05 V to 0.30 V (10 mV step) | Accuracy ±15 mV |
| Load short-circuiting detection voltage | 0.5 V (fixed) | Accuracy ±200 mV |
| Charge overcurrent detection voltage | −0.1 V (fixed) | Accuracy ±30 mV |

- Detection delay times are generated only by an internal circuit (external capacitors are unnecessary). Accuracy ±20%
- High-withstand voltage (VM pin and CO pin: Absolute maximum rating = 28 V)
- 0 V battery charge function "available" / "unavailable" is selectable.
- Power-down function "available" / "unavailable" is selectable.
- Wide operation temperature range Ta = −40°C to +85°C
- Low current consumption

| | |
|---|---|
| During operation | 3.0 μA typ., 5.5 μA max. (Ta = +25°C) |
| During power-down | 0.2 μA max. (Ta = +25°C) |

- Lead-free, Sn 100%, halogen-free*3

***1.** Overcharge release voltage = Overcharge detection voltage − Overcharge hysteresis voltage
(Overcharge hysteresis voltage can be selected as 0 V or from a range of 0.1 V to 0.4 V in 50 mV step.)
***2.** Overdischarge release voltage = Overdischarge detection voltage + Overdischarge hysteresis voltage
(Overdischarge hysteresis voltage can be selected as 0 V or from a range of 0.1 V to 0.7 V in 100 mV step.)
***3.** Refer to "■ **Product Name Structure**" for details.

## ■ Applications

- Lithium-ion rechargeable battery pack
- Lithium polymer rechargeable battery pack

## ■ Packages

- SOT-23-5
- SNT-6A

## ■ Block Diagram

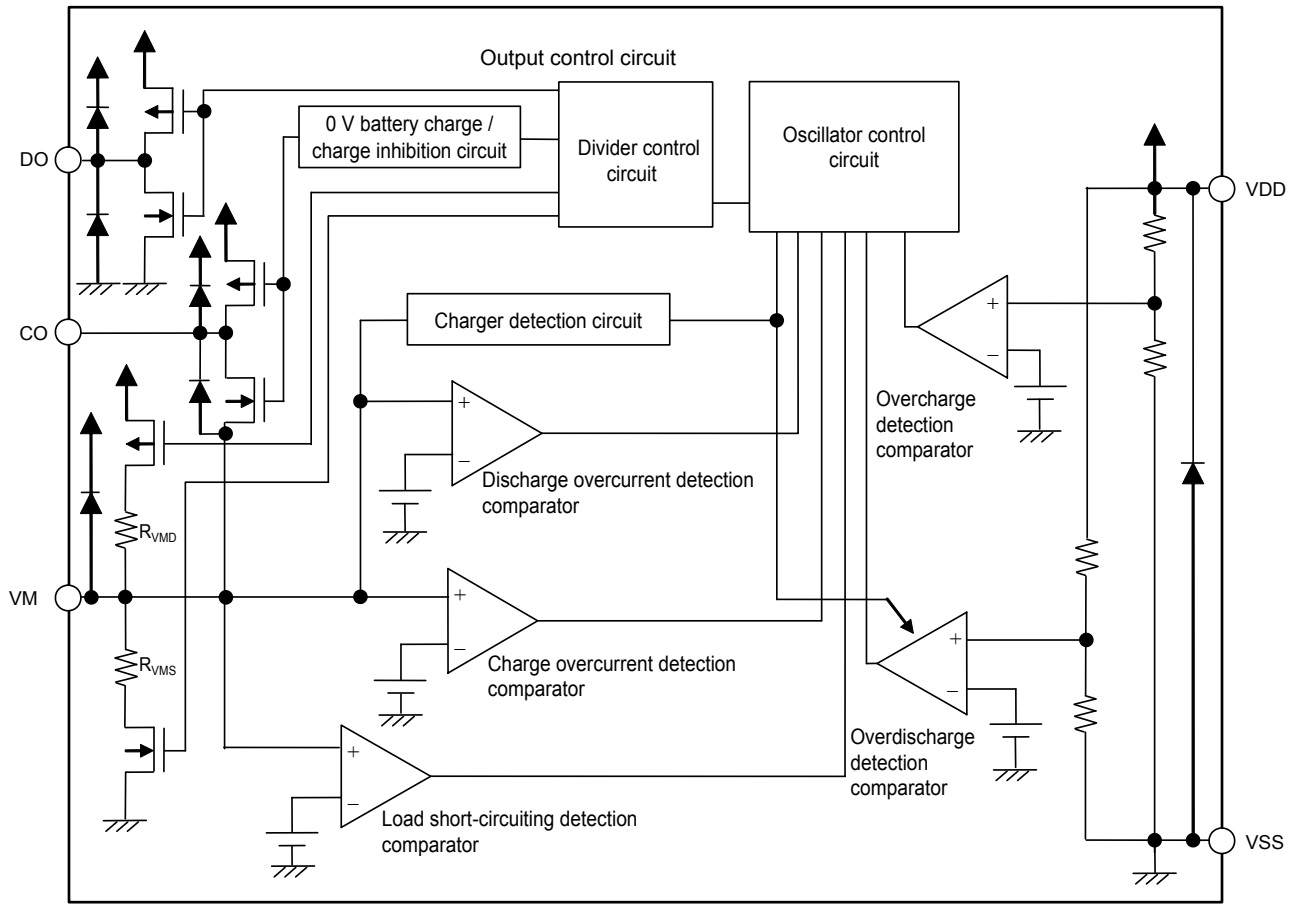


**Remark** All diodes shown in figure are parasitic diodes.

**Figure 1**

## ■ Product Name Structure

### 1. Product name

#### 1. 1 SOT-23-5

**S-8211C xx - M5T1 x**

- x: Environmental code
  - U: Lead-free (Sn 100%), halogen-free
  - G: Lead-free (for details, please contact our sales office)
- M5T1: Package name (abbreviation) and IC packing specifications*1
  - M5T1: SOT-23-5, Tape
- xx: Serial code*2
  - Sequentially set from AA to ZZ

***1.** Refer to the tape drawing.
***2.** Refer to "**3. Product name list**".

#### 1. 2 SNT-6A

**S-8211C xx - I6T1 U**

- U: Environmental code
  - U: Lead-free (Sn 100%), halogen-free
- I6T1: Package name (abbreviation) and IC packing specifications*1
  - I6T1: SNT-6A, Tape
- xx: Serial code*2
  - Sequentially set from AA to ZZ

***1.** Refer to the tape drawing.
***2.** Refer to "**3. Product name list**".

### 2. Packages

**Table 1 Package Drawing Codes**

| Package Name | Dimension | Tape | Reel | Land |
|---|---|---|---|---|
| SOT-23-5 | MP005-A-P-SD | MP005-A-C-SD | MP005-A-R-SD | – |
| SNT-6A | PG006-A-P-SD | PG006-A-C-SD | PG006-A-R-SD | PG006-A-L-SD |

## 3. Product name list

### 3. 1 SOT-23-5

**Table 2**

| Product Name | Over-charge Detection Voltage [$V_{CU}$] | Over-charge Release Voltage [$V_{CL}$] | Over-discharge Detection Voltage [$V_{DL}$] | Over-discharge Release Voltage [$V_{DU}$] | Discharge Overcurrent Detection Voltage [$V_{DIOV}$] | 0 V Battery Charge Function | Delay Time Combination*1 | Power-down Function |
|---|---|---|---|---|---|---|---|---|
| S-8211CAA-M5T1x | 4.275 V | 4.175 V | 2.30 V | 2.40 V | 0.10 V | Available | (1) | Available |
| S-8211CAB-M5T1x | 4.325 V | 4.075 V | 2.50 V | 2.90 V | 0.15 V | Unavailable | (2) | Available |
| S-8211CAD-M5T1x | 4.350 V | 4.150 V | 2.30 V | 3.00 V | 0.20 V | Available | (3) | Available |
| S-8211CAE-M5T1x | 4.280 V | 4.180 V | 2.30 V | 2.30 V | 0.12 V | Available | (4) | Available |
| S-8211CAF-M5T1x | 4.275 V | 4.275 V | 2.30 V | 2.30 V | 0.10 V | Available | (5) | Available |
| S-8211CAH-M5T1x | 4.280 V | 4.080 V | 2.30 V | 2.30 V | 0.08 V | Available | (1) | Available |
| S-8211CAI-M5T1x | 4.280 V | 4.080 V | 2.30 V | 2.30 V | 0.10 V | Available | (1) | Available |
| S-8211CAJ-M5T1x | 4.280 V | 4.080 V | 2.30 V | 2.30 V | 0.10 V | Unavailable | (1) | Available |
| S-8211CAK-M5T1x | 4.280 V | 4.080 V | 2.30 V | 2.30 V | 0.13 V | Unavailable | (1) | Available |
| S-8211CAL-M5T1x | 4.280 V | 4.130 V | 2.60 V | 3.10 V | 0.15 V | Unavailable | (1) | Available |
| S-8211CAM-M5T1x | 4.280 V | 4.130 V | 2.80 V | 3.10 V | 0.15 V | Unavailable | (1) | Available |
| S-8211CAN-M5T1x | 4.200 V | 4.100 V | 2.80 V | 2.90 V | 0.15 V | Unavailable | (1) | Available |
| S-8211CAO-M5T1x | 4.275 V | 4.075 V | 2.30 V | 2.30 V | 0.12 V | Available | (5) | Available |
| S-8211CAP-M5T1x | 4.275 V | 4.075 V | 2.30 V | 2.30 V | 0.13 V | Available | (5) | Available |
| S-8211CAQ-M5T1x | 4.275 V | 4.075 V | 2.30 V | 2.30 V | 0.15 V | Available | (5) | Available |
| S-8211CAR-M5T1x | 4.275 V | 4.075 V | 2.30 V | 2.30 V | 0.15 V | Available | (1) | Available |
| S-8211CAS-M5T1x | 4.280 V | 4.130 V | 2.80 V | 3.10 V | 0.10 V | Unavailable | (1) | Available |
| S-8211CAT-M5T1x | 4.275 V | 4.075 V | 2.80 V | 3.10 V | 0.10 V | Available | (4) | Available |
| S-8211CAU-M5T1x | 4.280 V | 4.130 V | 2.80 V | 3.10 V | 0.05 V | Unavailable | (1) | Available |
| S-8211CAV-M5T1x | 4.325 V | 4.075 V | 2.50 V | 2.90 V | 0.15 V | Available | (2) | Available |
| S-8211CAY-M5T1x | 4.280 V | 4.280 V | 2.80 V | 2.80 V | 0.05 V | Available | (1) | Available |
| S-8211CAZ-M5T1x | 4.280 V | 4.280 V | 3.00 V | 3.00 V | 0.075 V | Available | (1) | Available |
| S-8211CBV-M5T1x | 4.280 V | 4.080 V | 2.80 V | 2.80 V | 0.15 V | Available | (4) | Available |
| S-8211CCD-M5T1U | 4.280 V | 4.130 V | 2.70 V | 3.10 V | 0.20 V | Available | (1) | Available |
| S-8211CCJ-M5T1U*2 | 4.225 V | 4.025 V | 2.50 V | 2.90 V | 0.15 V | Available | (8) | Unavailable |
| S-8211CCK-M5T1U | 4.350 V | 4.150 V | 2.10 V | 2.20 V | 0.30 V | Unavailable | (1) | Available |
| S-8211CCQ-M5T1U | 4.350 V | 4.150 V | 2.10 V | 2.20 V | 0.12 V | Unavailable | (1) | Available |
| S-8211CCR-M5T1U | 4.350 V | 4.150 V | 2.10 V | 2.20 V | 0.15 V | Unavailable | (1) | Available |
| S-8211CCT-M5T1U | 4.150 V | 4.050 V | 2.50 V | 2.80 V | 0.16 V | Available | (1) | Available |
| S-8211CCV-M5T1U | 4.220 V | 4.120 V | 2.50 V | 2.80 V | 0.16 V | Available | (1) | Unavailable |
| S-8211CCW-M5T1U | 4.280 V | 4.130 V | 2.30 V | 3.00 V | 0.20 V | Available | (3) | Available |
| S-8211CDB-M5T1U | 4.100 V | 3.850 V | 2.50 V | 2.90 V | 0.15 V | Unavailable | (1) | Available |
| S-8211CDD-M5T1U | 4.350 V | 4.150 V | 2.10 V | 2.20 V | 0.12 V | Unavailable | (6) | Available |
| S-8211CDG-M5T1U | 4.275 V | 4.075 V | 2.50 V | 3.00 V | 0.16 V | Available | (1) | Available |
| S-8211CDJ-M5T1U | 4.150 V | 4.050 V | 2.90 V | 3.00 V | 0.15 V | Unavailable | (1) | Available |
| S-8211CDN-M5T1U | 4.350 V | 4.150 V | 2.80 V | 3.10 V | 0.05 V | Available | (1) | Available |

***1.** Refer to **Table 4** about the details of the delay time combinations.
***2.** The charge overcurrent detection voltage: −0.15 V ± 0.03 V (Ta = +25°C)

**Remark 1.** Please contact our sales office for the products with detection voltage value other than those specified above.
**2.** x: G or U
**3.** Please select products of environmental code = U for Sn 100%, halogen-free products.

### 3. 2 SNT-6A

**Table 3 (1 / 2)**

| Product Name | Over-charge Detection Voltage [$V_{CU}$] | Over-charge Release Voltage [$V_{CL}$] | Over-discharge Detection Voltage [$V_{DL}$] | Over-discharge Release Voltage [$V_{DU}$] | Discharge Overcurrent Detection Voltage [$V_{DIOV}$] | 0 V Battery Charge Function | Delay Time Combination*1 | Power-down Function |
|---|---|---|---|---|---|---|---|---|
| S-8211CAA-I6T1U | 4.275 V | 4.175 V | 2.30 V | 2.40 V | 0.10 V | Available | (1) | Available |
| S-8211CAB-I6T1U | 4.325 V | 4.075 V | 2.50 V | 2.90 V | 0.15 V | Unavailable | (2) | Available |
| S-8211CAD-I6T1U | 4.350 V | 4.150 V | 2.30 V | 3.00 V | 0.20 V | Available | (3) | Available |
| S-8211CAE-I6T1U | 4.280 V | 4.180 V | 2.30 V | 2.30 V | 0.12 V | Available | (4) | Available |
| S-8211CAF-I6T1U | 4.275 V | 4.275 V | 2.30 V | 2.30 V | 0.10 V | Available | (5) | Available |
| S-8211CAH-I6T1U | 4.280 V | 4.080 V | 2.30 V | 2.30 V | 0.08 V | Available | (1) | Available |
| S-8211CAI-I6T1U | 4.280 V | 4.080 V | 2.30 V | 2.30 V | 0.10 V | Available | (1) | Available |
| S-8211CAJ-I6T1U | 4.280 V | 4.080 V | 2.30 V | 2.30 V | 0.10 V | Unavailable | (1) | Available |
| S-8211CAK-I6T1U | 4.280 V | 4.080 V | 2.30 V | 2.30 V | 0.13 V | Unavailable | (1) | Available |
| S-8211CAL-I6T1U | 4.280 V | 4.130 V | 2.60 V | 3.10 V | 0.15 V | Unavailable | (1) | Available |
| S-8211CAM-I6T1U | 4.280 V | 4.130 V | 2.80 V | 3.10 V | 0.15 V | Unavailable | (1) | Available |
| S-8211CAN-I6T1U | 4.200 V | 4.100 V | 2.80 V | 2.90 V | 0.15 V | Unavailable | (1) | Available |
| S-8211CAO-I6T1U | 4.275 V | 4.075 V | 2.30 V | 2.30 V | 0.12 V | Available | (5) | Available |
| S-8211CAP-I6T1U | 4.275 V | 4.075 V | 2.30 V | 2.30 V | 0.13 V | Available | (5) | Available |
| S-8211CAQ-I6T1U | 4.275 V | 4.075 V | 2.30 V | 2.30 V | 0.15 V | Available | (5) | Available |
| S-8211CAR-I6T1U | 4.275 V | 4.075 V | 2.30 V | 2.30 V | 0.15 V | Available | (1) | Available |
| S-8211CAS-I6T1U | 4.280 V | 4.130 V | 2.80 V | 3.10 V | 0.10 V | Unavailable | (1) | Available |
| S-8211CAT-I6T1U | 4.275 V | 4.075 V | 2.80 V | 3.10 V | 0.10 V | Available | (4) | Available |
| S-8211CAU-I6T1U | 4.280 V | 4.130 V | 2.80 V | 3.10 V | 0.05 V | Unavailable | (1) | Available |
| S-8211CAV-I6T1U | 4.325 V | 4.075 V | 2.50 V | 2.90 V | 0.15 V | Available | (2) | Available |
| S-8211CAW-I6T1U | 4.280 V | 4.080 V | 2.40 V | 2.40 V | 0.05 V | Unavailable | (6) | Available |
| S-8211CAX-I6T1U | 4.275 V | 4.175 V | 2.30 V | 2.30 V | 0.12 V | Available | (4) | Available |
| S-8211CAY-I6T1U | 4.280 V | 4.280 V | 2.80 V | 2.80 V | 0.05 V | Available | (1) | Available |
| S-8211CAZ-I6T1U | 4.280 V | 4.280 V | 3.00 V | 3.00 V | 0.075 V | Available | (1) | Available |
| S-8211CBA-I6T1U | 4.275 V | 4.175 V | 2.30 V | 2.40 V | 0.05 V | Available | (1) | Available |
| S-8211CBB-I6T1U | 4.300 V | 4.100 V | 2.30 V | 2.30 V | 0.13 V | Available | (1) | Available |
| S-8211CBD-I6T1U | 4.275 V | 4.275 V | 2.30 V | 2.30 V | 0.05 V | Available | (5) | Available |
| S-8211CBF-I6T1U | 4.300 V | 4.100 V | 2.10 V | 2.10 V | 0.13 V | Available | (1) | Available |
| S-8211CBH-I6T1U | 4.275 V | 4.175 V | 2.80 V | 2.90 V | 0.08 V | Available | (1) | Available |
| S-8211CBJ-I6T1U | 4.275 V | 4.075 V | 2.80 V | 2.90 V | 0.10 V | Available | (5) | Available |
| S-8211CBN-I6T1U | 4.225 V | 4.125 V | 2.00 V | 2.00 V | 0.20 V | Unavailable | (7) | Available |
| S-8211CBO-I6T1U | 4.270 V | 4.070 V | 2.30 V | 2.30 V | 0.10 V | Available | (5) | Available |
| S-8211CBR-I6T1U | 4.280 V | 4.180 V | 2.30 V | 2.30 V | 0.12 V | Unavailable | (4) | Available |
| S-8211CBV-I6T1U | 4.280 V | 4.080 V | 2.80 V | 2.80 V | 0.15 V | Available | (4) | Available |
| S-8211CBW-I6T1U | 4.280 V | 4.180 V | 2.50 V | 2.70 V | 0.19 V | Unavailable | (1) | Available |
| S-8211CBZ-I6T1U | 4.375 V | 4.125 V | 2.50 V | 2.90 V | 0.12 V | Unavailable | (4) | Available |
| S-8211CCB-I6T1U | 4.250 V | 4.050 V | 3.00 V | 3.20 V | 0.10 V | Available | (1) | Available |
| S-8211CCC-I6T1U | 4.270 V | 4.070 V | 3.00 V | 3.00 V | 0.10 V | Available | (5) | Available |
| S-8211CCD-I6T1U | 4.280 V | 4.130 V | 2.70 V | 3.10 V | 0.20 V | Available | (1) | Available |
| S-8211CCE-I6T1U*2 | 4.225 V | 4.025 V | 2.80 V | 2.80 V | 0.15 V | Available | (8) | Unavailable |
| S-8211CCF-I6T1U | 4.350 V | 4.050 V | 2.30 V | 2.30 V | 0.13 V | Available | (5) | Available |
| S-8211CCG-I6T1U | 4.275 V | 4.075 V | 2.50 V | 2.70 V | 0.16 V | Unavailable | (1) | Available |

**Table 3 (2 / 2)**

| Product Name | Over-charge Detection Voltage [$V_{CU}$] | Over-charge Release Voltage [$V_{CL}$] | Over-discharge Detection Voltage [$V_{DL}$] | Over-discharge Release Voltage [$V_{DU}$] | Discharge Overcurrent Detection Voltage [$V_{DIOV}$] | 0 V Battery Charge Function | Delay Time Combination*1 | Power-down Function |
|---|---|---|---|---|---|---|---|---|
| S-8211CCH-I6T1U*2 | 4.275 V | 4.075 V | 2.80 V | 2.80 V | 0.15 V | Unavailable | (8) | Available |
| S-8211CCI-I6T1U | 4.275 V | 4.075 V | 2.60 V | 2.60 V | 0.15 V | Available | (5) | Available |
| S-8211CCJ-I6T1U*2 | 4.225 V | 4.025 V | 2.50 V | 2.90 V | 0.15 V | Available | (8) | Unavailable |
| S-8211CCM-I6T1U | 4.275 V | 4.075 V | 2.80 V | 3.10 V | 0.20 V | Available | (4) | Available |
| S-8211CCN-I6T1U*2 | 4.280 V | 4.180 V | 2.50 V | 2.70 V | 0.17 V | Unavailable | (1) | Available |
| S-8211CCS-I6T1U | 4.425 V | 4.225 V | 2.30 V | 2.30 V | 0.165 V | Unavailable | (5) | Available |
| S-8211CCU-I6T1U | 4.425 V | 4.225 V | 2.50 V | 2.50 V | 0.13 V | Available | (5) | Available |
| S-8211CCW-I6T1U | 4.280 V | 4.130 V | 2.30 V | 3.00 V | 0.20 V | Available | (3) | Available |
| S-8211CCX-I6T1U | 4.425 V | 4.225 V | 2.30 V | 2.30 V | 0.07 V | Available | (5) | Available |
| S-8211CCY-I6T1U | 4.280 V | 4.180 V | 2.80 V | 2.80 V | 0.12 V | Unavailable | (4) | Available |
| S-8211CCZ-I6T1U | 4.280 V | 4.180 V | 2.50 V | 2.50 V | 0.12 V | Unavailable | (4) | Available |
| S-8211CDA-I6T1U | 4.280 V | 4.130 V | 2.60 V | 3.10 V | 0.10 V | Unavailable | (1) | Available |
| S-8211CDC-I6T1U | 4.280 V | 4.130 V | 3.00 V | 3.10 V | 0.15 V | Unavailable | (1) | Available |
| S-8211CDE-I6T1U | 4.425 V | 4.225 V | 2.50 V | 2.50 V | 0.10 V | Available | (5) | Available |
| S-8211CDF-I6T1U | 4.425 V | 4.225 V | 2.80 V | 2.80 V | 0.12 V | Available | (5) | Available |
| S-8211CDH-I6T1U | 4.275 V | 4.075 V | 2.60 V | 2.60 V | 0.10 V | Available | (5) | Available |
| S-8211CDI-I6T1U | 4.425 V | 4.225 V | 2.50 V | 2.50 V | 0.15 V | Available | (5) | Available |
| S-8211CDK-I6T1U | 4.425 V | 4.225 V | 2.50 V | 2.50 V | 0.15 V | Unavailable | (5) | Available |
| S-8211CDL-I6T1U | 4.425 V | 4.225 V | 2.50 V | 2.90 V | 0.13 V | Available | (5) | Unavailable |
| S-8211CDM-I6T1U | 4.425 V | 4.225 V | 2.50 V | 3.10 V | 0.10 V | Unavailable | (1) | Available |
| S-8211CDO-I6T1U | 4.425 V | 4.225 V | 2.50 V | 2.50 V | 0.10 V | Unavailable | (1) | Available |
| S-8211CDP-I6T1U | 4.425 V | 4.225 V | 2.50 V | 2.50 V | 0.13 V | Available | (9) | Available |

***1.** Refer to **Table 4** about the details of the delay time combinations.
***2.** The charge overcurrent detection voltage: −0.15 V ± 0.03 V (Ta = +25°C)

**Remark** Please contact our sales office for the products with detection voltage value other than those specified above.

**Table 4**

| Delay Time Combination | Overcharge Detection Delay Time [$t_{CU}$] | Overdischarge Detection Delay Time [$t_{DL}$] | Discharge Overcurrent Detection Delay Time [$t_{DIOV}$] | Load Short-circuiting Detection Delay Time [$t_{SHORT}$] | Charge Overcurrent Detection Delay Time [$t_{CIOV}$] |
|---|---|---|---|---|---|
| (1) | 1.2 s | 150 ms | 9 ms | 300 μs | 9 ms |
| (2) | 1.2 s | 150 ms | 9 ms | 560 μs | 9 ms |
| (3) | 143 ms | 38 ms | 18 ms | 300 μs | 9 ms |
| (4) | 1.2 s | 150 ms | 18 ms | 300 μs | 9 ms |
| (5) | 1.2 s | 38 ms | 9 ms | 300 μs | 9 ms |
| (6) | 1.2 s | 150 ms | 4.5 ms | 300 μs | 9 ms |
| (7) | 573 ms | 150 ms | 4.5 ms | 300 μs | 4.5 ms |
| (8) | 1.2 s | 75 ms | 9 ms | 300 μs | 9 ms |
| (9) | 1.2 s | 300 ms | 9 ms | 300 μs | 9 ms |

**Remark** The delay times can be changed within the range listed in **Table 5**. For details, please contact our sales office.

**Table 5**

| Delay Time | Symbol | Selection Range | | | | Remark |
|---|---|---|---|---|---|---|
| Overcharge detection delay time | $t_{CU}$ | – | 143 ms | 573 ms | 1.2 s*1 | Select a value from the left. |
| Overdischarge detection delay time | $t_{DL}$ | 38 ms | 75 ms | 150 ms*1 | 300 ms | Select a value from the left. |
| Discharge overcurrent detection delay time | $t_{DIOV}$ | – | 4.5 ms | 9 ms*1 | 18 ms | Select a value from the left. |
| Load short-circuiting detection delay time | $t_{SHORT}$ | – | – | 300 μs*1 | 560 μs | Select a value from the left. |
| Charge overcurrent detection delay time | $t_{CIOV}$ | – | 4.5 ms | 9 ms*1 | 18 ms | Select a value from the left. |

***1.** The value is the delay time of the standard products.

## ■ Pin Configurations

### 1. SOT-23-5

Top view

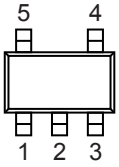


**Figure 2**

**Table 6**

| Pin No. | Symbol | Description |
|---|---|---|
| 1 | VM | Voltage detection pin between VM pin and VSS pin (Overcurrent / charger detection pin) |
| 2 | VDD | Input pin for positive power supply |
| 3 | VSS | Input pin for negative power supply |
| 4 | DO | Connection pin of discharge control FET gate (CMOS output) |
| 5 | CO | Connection pin of charge control FET gate (CMOS output) |

### 2. SNT-6A

Top view

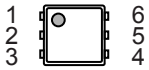


**Figure 3**

**Table 7**

| Pin No. | Symbol | Description |
|---|---|---|
| 1 | NC*1 | No connection |
| 2 | CO | Connection pin of charge control FET gate (CMOS output) |
| 3 | DO | Connection pin of discharge control FET gate (CMOS output) |
| 4 | VSS | Input pin for negative power supply |
| 5 | VDD | Input pin for positive power supply |
| 6 | VM | Voltage detection pin between VM pin and VSS pin (Overcurrent / charger detection pin) |

***1.** The NC pin is electrically open.
The NC pin can be connected to VDD pin or VSS pin.

## ■ Absolute Maximum Ratings

**Table 8**

(Ta = +25°C unless otherwise specified)

| Item | | Symbol | Applied pin | Absolute Maximum Rating | Unit |
|---|---|---|---|---|---|
| Input voltage between VDD pin and VSS pin | | $V_{DS}$ | VDD | $V_{SS}$ − 0.3 to $V_{SS}$ + 12 | V |
| VM pin input voltage | | $V_{VM}$ | VM | $V_{DD}$ − 28 to $V_{DD}$ + 0.3 | V |
| DO pin output voltage | | $V_{DO}$ | DO | $V_{SS}$ − 0.3 to $V_{DD}$ + 0.3 | V |
| CO pin output voltage | | $V_{CO}$ | CO | $V_{VM}$ − 0.3 to $V_{DD}$ + 0.3 | V |
| Power dissipation | SOT-23-5 | $P_D$ | − | 250 (When not mounted on board) | mW |
| | | | − | 600*1 | mW |
| | SNT-6A | | − | 400*1 | mW |
| Operation ambient temperature | | $T_{opr}$ | − | −40 to +85 | °C |
| Storage temperature | | $T_{stg}$ | − | −55 to +125 | °C |

***1.** When mounted on board
[Mounted board]
(1) Board size: 114.3 mm × 76.2 mm × t1.6 mm
(2) Board name: JEDEC STANDARD51-7

**Caution The absolute maximum ratings are rated values exceeding which the product could suffer physical damage. These values must therefore not be exceeded under any conditions.**

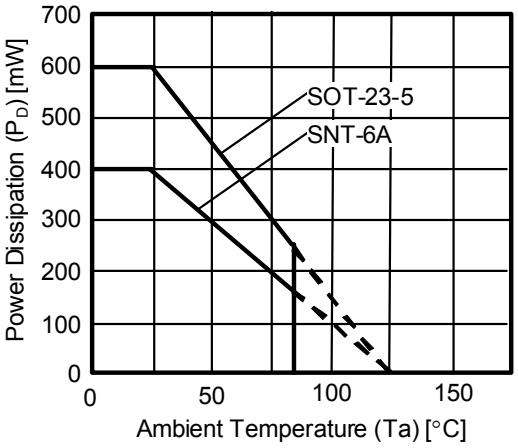


**Figure 4 Power Dissipation of Package (When Mounted on Board)**

## ■ Electrical Characteristics

### 1. Except detection delay time (Ta = +25°C)

**Table 9**

(Ta = +25°C unless otherwise specified)

| Item | Symbol | Condition | | Min. | Typ. | Max. | Unit | Test Condition | Test Circuit |
|---|---|---|---|---|---|---|---|---|---|
| **Detection Voltage** | | | | | | | | | |
| Overcharge detection voltage | $V_{CU}$ | 3.90 V to 4.50 V, adjustable | | $V_{CU}$ − 0.025 | $V_{CU}$ | $V_{CU}$ + 0.025 | V | 1 | 1 |
| | | 3.90 V to 4.50 V, adjustable, Ta = −5°C to +55°C*1 | | $V_{CU}$ − 0.03 | $V_{CU}$ | $V_{CU}$ + 0.03 | V | 1 | 1 |
| Overcharge release voltage | $V_{CL}$ | 3.80 V to 4.43 V, adjustable | $V_{CL} \neq V_{CU}$ | $V_{CL}$ − 0.05 | $V_{CL}$ | $V_{CL}$ + 0.05 | V | 1 | 1 |
| | | | $V_{CL} = V_{CU}$ | $V_{CL}$ − 0.025 | $V_{CL}$ | $V_{CL}$ + 0.025 | V | 1 | 1 |
| Overdischarge detection voltage | $V_{DL}$ | 2.00 V to 3.00 V, adjustable | | $V_{DL}$ − 0.05 | $V_{DL}$ | $V_{DL}$ + 0.05 | V | 2 | 2 |
| Overdischarge release voltage | $V_{DU}$ | 2.00 V to 3.40 V, adjustable | $V_{DU} \neq V_{DL}$ | $V_{DU}$ − 0.10 | $V_{DU}$ | $V_{DU}$ + 0.10 | V | 2 | 2 |
| | | | $V_{DU} = V_{DL}$ | $V_{DU}$ − 0.05 | $V_{DU}$ | $V_{DU}$ + 0.05 | V | 2 | 2 |
| Discharge overcurrent detection voltage | $V_{DIOV}$ | 0.05 V to 0.30 V, adjustable | | $V_{DIOV}$ − 0.015 | $V_{DIOV}$ | $V_{DIOV}$ + 0.015 | V | 3 | 2 |
| Load short-circuiting detection voltage*2 | $V_{SHORT}$ | − | | 0.30 | 0.50 | 0.70 | V | 3 | 2 |
| Charge overcurrent detection voltage | $V_{CIOV}$ | − | | −0.13 | −0.1 | −0.07 | V | 4 | 2 |
| **0 V Battery Charge Function** | | | | | | | | | |
| 0 V battery charge starting charger voltage | $V_{0CHA}$ | 0 V battery charge function "available" | | 1.2 | − | − | V | 11 | 2 |
| 0 V battery charge inhibition battery voltage | $V_{0INH}$ | 0 V battery charge function "unavailable" | | − | − | 0.5 | V | 12 | 2 |
| **Internal Resistance** | | | | | | | | | |
| Resistance between VM pin and VDD pin | $R_{VMD}$ | $V_{DD}$ = 1.8 V, $V_{VM}$ = 0 V | | 100 | 300 | 900 | kΩ | 6 | 3 |
| Resistance between VM pin and VSS pin | $R_{VMS}$ | $V_{DD}$ = 3.5 V, $V_{VM}$ = 1.0 V | | 10 | 20 | 40 | kΩ | 6 | 3 |
| **Input Voltage** | | | | | | | | | |
| Operation voltage between VDD pin and VSS pin | $V_{DSOP1}$ | − | | 1.5 | − | 8 | V | − | − |
| Operation voltage between VDD pin and VM pin | $V_{DSOP2}$ | − | | 1.5 | − | 28 | V | − | − |
| **Input Current (With Power-down Function)** | | | | | | | | | |
| Current consumption during operation | $I_{OPE}$ | $V_{DD}$ = 3.5 V, $V_{VM}$ = 0 V | | 1.0 | 3.0 | 5.5 | μA | 5 | 2 |
| Current consumption during power-down | $I_{PDN}$ | $V_{DD} = V_{VM}$ = 1.5 V | | − | − | 0.2 | μA | 5 | 2 |
| **Input Current (Without Power-down Function)** | | | | | | | | | |
| Current consumption during operation | $I_{OPE}$ | $V_{DD}$ = 3.5 V, $V_{VM}$ = 0 V | | 1.0 | 3.0 | 5.5 | μA | 5 | 2 |
| Current consumption during overdischarge | $I_{OPED}$ | $V_{DD} = V_{VM}$ = 1.5 V | | 0.3 | 2.0 | 3.5 | μA | 5 | 2 |
| **Output Resistance** | | | | | | | | | |
| CO pin resistance "H" | $R_{COH}$ | $V_{CO}$ = 3.0 V, $V_{DD}$ = 3.5 V, $V_{VM}$ = 0 V | | 2.5 | 5 | 10 | kΩ | 7 | 4 |
| CO pin resistance "L" | $R_{COL}$ | $V_{CO}$ = 0.5 V, $V_{DD}$ = 4.5 V, $V_{VM}$ = 0 V | | 2.5 | 5 | 10 | kΩ | 7 | 4 |
| DO pin resistance "H" | $R_{DOH}$ | $V_{DO}$ = 3.0 V, $V_{DD}$ = 3.5 V, $V_{VM}$ = 0 V | | 2.5 | 5 | 10 | kΩ | 8 | 4 |
| DO pin resistance "L" | $R_{DOL}$ | $V_{DO}$ = 0.5 V, $V_{DD} = V_{VM}$ = 1.8 V | | 2.5 | 5 | 10 | kΩ | 8 | 4 |

***1.** Since products are not screened at high and low temperature, the specification for this temperature range is guaranteed by design, not tested in production.

***2.** In any conditions, load short-circuiting detection voltage ($V_{SHORT}$) is higher than discharge overcurrent detection voltage ($V_{DIOV}$).

### 2. Except detection delay time (Ta = −40°C to +85°C*1)

**Table 10**

(Ta = −40°C to +85°C*1 unless otherwise specified)

| Item | Symbol | Condition | | Min. | Typ. | Max. | Unit | Test Condition | Test Circuit |
|---|---|---|---|---|---|---|---|---|---|
| **Detection Voltage** | | | | | | | | | |
| Overcharge detection voltage | $V_{CU}$ | 3.90 V to 4.50 V, adjustable | | $V_{CU}$ − 0.060 | $V_{CU}$ | $V_{CU}$ + 0.040 | V | 1 | 1 |
| Overcharge release voltage | $V_{CL}$ | 3.80 V to 4.43 V, adjustable | $V_{CL} \neq V_{CU}$ | $V_{CL}$ − 0.08 | $V_{CL}$ | $V_{CL}$ + 0.065 | V | 1 | 1 |
| | | | $V_{CL} = V_{CU}$ | $V_{CL}$ − 0.06 | $V_{CL}$ | $V_{CL}$ + 0.04 | V | 1 | 1 |
| Overdischarge detection voltage | $V_{DL}$ | 2.00 V to 3.00 V, adjustable | | $V_{DL}$ − 0.11 | $V_{DL}$ | $V_{DL}$ + 0.13 | V | 2 | 2 |
| Overdischarge release voltage | $V_{DU}$ | 2.00 V to 3.40 V, adjustable | $V_{DU} \neq V_{DL}$ | $V_{DU}$ − 0.15 | $V_{DU}$ | $V_{DU}$ + 0.19 | V | 2 | 2 |
| | | | $V_{DU} = V_{DL}$ | $V_{DU}$ − 0.11 | $V_{DU}$ | $V_{DU}$ + 0.13 | V | 2 | 2 |
| Discharge overcurrent detection voltage | $V_{DIOV}$ | 0.05 V to 0.30 V, adjustable | | $V_{DIOV}$ − 0.021 | $V_{DIOV}$ | $V_{DIOV}$ + 0.024 | V | 3 | 2 |
| Load short-circuiting detection voltage*2 | $V_{SHORT}$ | − | | 0.16 | 0.50 | 0.84 | V | 3 | 2 |
| Charge overcurrent detection voltage | $V_{CIOV}$ | − | | −0.14 | − 0.1 | −0.06 | V | 4 | 2 |
| **0 V Battery Charge Function** | | | | | | | | | |
| 0 V battery charge starting charger voltage | $V_{0CHA}$ | 0 V battery charge function "available" | | 1.7 | − | − | V | 11 | 2 |
| 0 V battery charge inhibition battery voltage | $V_{0INH}$ | 0 V battery charge function "unavailable" | | − | − | 0.3 | V | 12 | 2 |
| **Internal Resistance** | | | | | | | | | |
| Resistance between VM pin and VDD pin | $R_{VMD}$ | $V_{DD}$ = 1.8 V, $V_{VM}$ = 0 V | | 78 | 300 | 1310 | kΩ | 6 | 3 |
| Resistance between VM pin and VSS pin | $R_{VMS}$ | $V_{DD}$ = 3.5 V, $V_{VM}$ = 1.0 V | | 7.2 | 20 | 44 | kΩ | 6 | 3 |
| **Input Voltage** | | | | | | | | | |
| Operation voltage between VDD pin and VSS pin | $V_{DSOP1}$ | − | | 1.5 | − | 8 | V | − | − |
| Operation voltage between VDD pin and VM pin | $V_{DSOP2}$ | − | | 1.5 | − | 28 | V | − | − |
| **Input Current (With Power-down Function)** | | | | | | | | | |
| Current consumption during operation | $I_{OPE}$ | $V_{DD}$ = 3.5 V, $V_{VM}$ = 0 V | | 0.7 | 3.0 | 6.0 | μA | 5 | 2 |
| Current consumption during power-down | $I_{PDN}$ | $V_{DD} = V_{VM}$ = 1.5 V | | − | − | 0.3 | μA | 5 | 2 |
| **Input Current (Without Power-down Function)** | | | | | | | | | |
| Current consumption during operation | $I_{OPE}$ | $V_{DD}$ = 3.5 V, $V_{VM}$ = 0 V | | 0.7 | 3.0 | 6.0 | μA | 5 | 2 |
| Current consumption during overdischarge | $I_{OPED}$ | $V_{DD} = V_{VM}$ = 1.5 V | | 0.2 | 2.0 | 3.8 | μA | 5 | 2 |
| **Output Resistance** | | | | | | | | | |
| CO pin resistance "H" | $R_{COH}$ | $V_{CO}$ = 3.0 V, $V_{DD}$ = 3.5 V, $V_{VM}$ = 0 V | | 1.2 | 5 | 15 | kΩ | 7 | 4 |
| CO pin resistance "L" | $R_{COL}$ | $V_{CO}$ = 0.5 V, $V_{DD}$ = 4.5 V, $V_{VM}$ = 0 V | | 1.2 | 5 | 15 | kΩ | 7 | 4 |
| DO pin resistance "H" | $R_{DOH}$ | $V_{DO}$ = 3.0 V, $V_{DD}$ = 3.5 V, $V_{VM}$ = 0 V | | 1.2 | 5 | 15 | kΩ | 8 | 4 |
| DO pin resistance "L" | $R_{DOL}$ | $V_{DO}$ = 0.5 V, $V_{DD} = V_{VM}$ = 1.8 V | | 1.2 | 5 | 15 | kΩ | 8 | 4 |

***1.** Since products are not screened at high and low temperature, the specification for this temperature range is guaranteed by design, not tested in production.

***2.** In any conditions, load short-circuiting detection voltage ($V_{SHORT}$) is higher than discharge overcurrent detection voltage ($V_{DIOV}$).

## 3. Detection delay time

### 3. 1 S-8211CAA, S-8211CAH, S-8211CAI, S-8211CAJ, S-8211CAK, S-8211CAL, S-8211CAM, S-8211CAN, S-8211CAR, S-8211CAS, S-8211CAU, S-8211CAY, S-8211CAZ, S-8211CBA, S-8211CBB, S-8211CBF, S-8211CBH, S-8211CBW, S-8211CCB, S-8211CCD, S-8211CCG, S-8211CCK, S-8211CCN, S-8211CCQ, S-8211CCR, S-8211CCT, S-8211CCV, S-8211CDA, S-8211CDB, S-8211CDC, S-8211CDG, S-8211CDJ, S-8211CDM, S-8211CDN, S-8211CDO

**Table 11**

| Item | Symbol | Condition | Min. | Typ. | Max. | Unit | Test Condition | Test Circuit |
|---|---|---|---|---|---|---|---|---|
| **Delay Time (Ta = +25°C)** | | | | | | | | |
| Overcharge detection delay time | $t_{CU}$ | – | 0.96 | 1.2 | 1.4 | s | 9 | 5 |
| Overdischarge detection delay time | $t_{DL}$ | – | 120 | 150 | 180 | ms | 9 | 5 |
| Discharge overcurrent detection delay time | $t_{DIOV}$ | – | 7.2 | 9 | 11 | ms | 10 | 5 |
| Load short-circuiting detection delay time | $t_{SHORT}$ | – | 240 | 300 | 360 | μs | 10 | 5 |
| Charge overcurrent detection delay time | $t_{CIOV}$ | – | 7.2 | 9 | 11 | ms | 10 | 5 |
| **Delay Time (Ta = –40°C to +85°C)*1** | | | | | | | | |
| Overcharge detection delay time | $t_{CU}$ | – | 0.7 | 1.2 | 2.0 | s | 9 | 5 |
| Overdischarge detection delay time | $t_{DL}$ | – | 83 | 150 | 255 | ms | 9 | 5 |
| Discharge overcurrent detection delay time | $t_{DIOV}$ | – | 5 | 9 | 15 | ms | 10 | 5 |
| Load short-circuiting detection delay time | $t_{SHORT}$ | – | 150 | 300 | 540 | μs | 10 | 5 |
| Charge overcurrent detection delay time | $t_{CIOV}$ | – | 5 | 9 | 15 | ms | 10 | 5 |

***1.** Since products are not screened at high and low temperature, the specification for this temperature range is guaranteed by design, not tested in production.

### 3. 2 S-8211CAB, S-8211CAV

**Table 12**

| Item | Symbol | Condition | Min. | Typ. | Max. | Unit | Test Condition | Test Circuit |
|---|---|---|---|---|---|---|---|---|
| **Delay Time (Ta = +25°C)** | | | | | | | | |
| Overcharge detection delay time | $t_{CU}$ | – | 0.96 | 1.2 | 1.4 | s | 9 | 5 |
| Overdischarge detection delay time | $t_{DL}$ | – | 120 | 150 | 180 | ms | 9 | 5 |
| Discharge overcurrent detection delay time | $t_{DIOV}$ | – | 7.2 | 9 | 11 | ms | 10 | 5 |
| Load short-circuiting detection delay time | $t_{SHORT}$ | – | 450 | 560 | 670 | μs | 10 | 5 |
| Charge overcurrent detection delay time | $t_{CIOV}$ | – | 7.2 | 9 | 11 | ms | 10 | 5 |
| **Delay Time (Ta = –40°C to +85°C)*1** | | | | | | | | |
| Overcharge detection delay time | $t_{CU}$ | – | 0.7 | 1.2 | 2.0 | s | 9 | 5 |
| Overdischarge detection delay time | $t_{DL}$ | – | 83 | 150 | 255 | ms | 9 | 5 |
| Discharge overcurrent detection delay time | $t_{DIOV}$ | – | 5 | 9 | 15 | ms | 10 | 5 |
| Load short-circuiting detection delay time | $t_{SHORT}$ | – | 260 | 560 | 940 | μs | 10 | 5 |
| Charge overcurrent detection delay time | $t_{CIOV}$ | – | 5 | 9 | 15 | ms | 10 | 5 |

***1.** Since products are not screened at high and low temperature, the specification for this temperature range is guaranteed by design, not tested in production.

### 3. 3 S-8211CAD, S-8211CCW

**Table 13**

| Item | Symbol | Condition | Min. | Typ. | Max. | Unit | Test Condition | Test Circuit |
|---|---|---|---|---|---|---|---|---|
| **Delay Time (Ta = +25°C)** | | | | | | | | |
| Overcharge detection delay time | $t_{CU}$ | – | 115 | 143 | 172 | ms | 9 | 5 |
| Overdischarge detection delay time | $t_{DL}$ | – | 30 | 38 | 46 | ms | 9 | 5 |
| Discharge overcurrent detection delay time | $t_{DIOV}$ | – | 14.5 | 18 | 22 | ms | 10 | 5 |
| Load short-circuiting detection delay time | $t_{SHORT}$ | – | 240 | 300 | 360 | μs | 10 | 5 |
| Charge overcurrent detection delay time | $t_{CIOV}$ | – | 7.2 | 9 | 11 | ms | 10 | 5 |
| **Delay Time (Ta = –40°C to +85°C)*1** | | | | | | | | |
| Overcharge detection delay time | $t_{CU}$ | – | 82 | 143 | 240 | ms | 9 | 5 |
| Overdischarge detection delay time | $t_{DL}$ | – | 20 | 38 | 65 | ms | 9 | 5 |
| Discharge overcurrent detection delay time | $t_{DIOV}$ | – | 10 | 18 | 30 | ms | 10 | 5 |
| Load short-circuiting detection delay time | $t_{SHORT}$ | – | 150 | 300 | 540 | μs | 10 | 5 |
| Charge overcurrent detection delay time | $t_{CIOV}$ | – | 5 | 9 | 15 | ms | 10 | 5 |

***1.** Since products are not screened at high and low temperature, the specification for this temperature range is guaranteed by design, not tested in production.

### 3. 4 S-8211CAE, S-8211CAT, S-8211CAX, S-8211CBR, S-8211CBV, S-8211CBZ, S-8211CCM, S-8211CCY, S-8211CCZ

**Table 14**

| Item | Symbol | Condition | Min. | Typ. | Max. | Unit | Test Condition | Test Circuit |
|---|---|---|---|---|---|---|---|---|
| **Delay Time (Ta = +25°C)** | | | | | | | | |
| Overcharge detection delay time | $t_{CU}$ | – | 0.96 | 1.2 | 1.4 | s | 9 | 5 |
| Overdischarge detection delay time | $t_{DL}$ | – | 120 | 150 | 180 | ms | 9 | 5 |
| Discharge overcurrent detection delay time | $t_{DIOV}$ | – | 14.5 | 18 | 22 | ms | 10 | 5 |
| Load short-circuiting detection delay time | $t_{SHORT}$ | – | 240 | 300 | 360 | μs | 10 | 5 |
| Charge overcurrent detection delay time | $t_{CIOV}$ | – | 7.2 | 9 | 11 | ms | 10 | 5 |
| **Delay Time (Ta = –40°C to +85°C)*1** | | | | | | | | |
| Overcharge detection delay time | $t_{CU}$ | – | 0.7 | 1.2 | 2.0 | s | 9 | 5 |
| Overdischarge detection delay time | $t_{DL}$ | – | 83 | 150 | 255 | ms | 9 | 5 |
| Discharge overcurrent detection delay time | $t_{DIOV}$ | – | 10 | 18 | 30 | ms | 10 | 5 |
| Load short-circuiting detection delay time | $t_{SHORT}$ | – | 150 | 300 | 540 | μs | 10 | 5 |
| Charge overcurrent detection delay time | $t_{CIOV}$ | – | 5 | 9 | 15 | ms | 10 | 5 |

***1.** Since products are not screened at high and low temperature, the specification for this temperature range is guaranteed by design, not tested in production.

### 3. 5 S-8211CAF, S-8211CAO, S-8211CAP, S-8211CAQ, S-8211CBD, S-8211CBJ, S-8211CBO, S-8211CCC, S-8211CCF, S-8211CCI, S-8211CCS, S-8211CCU, S-8211CCX, S-8211CDE, S-8211CDF, S-8211CDH, S-8211CDI, S-8211CDK, S-8211CDL

**Table 15**

| Item | Symbol | Condition | Min. | Typ. | Max. | Unit | Test Condition | Test Circuit |
|---|---|---|---|---|---|---|---|---|
| **Delay Time (Ta = +25°C)** | | | | | | | | |
| Overcharge detection delay time | $t_{CU}$ | – | 0.96 | 1.2 | 1.4 | s | 9 | 5 |
| Overdischarge detection delay time | $t_{DL}$ | – | 30 | 38 | 46 | ms | 9 | 5 |
| Discharge overcurrent detection delay time | $t_{DIOV}$ | – | 7.2 | 9 | 11 | ms | 10 | 5 |
| Load short-circuiting detection delay time | $t_{SHORT}$ | – | 240 | 300 | 360 | μs | 10 | 5 |
| Charge overcurrent detection delay time | $t_{CIOV}$ | – | 7.2 | 9 | 11 | ms | 10 | 5 |
| **Delay Time (Ta = –40°C to +85°C)*1** | | | | | | | | |
| Overcharge detection delay time | $t_{CU}$ | – | 0.7 | 1.2 | 2.0 | s | 9 | 5 |
| Overdischarge detection delay time | $t_{DL}$ | – | 20 | 38 | 65 | ms | 9 | 5 |
| Discharge overcurrent detection delay time | $t_{DIOV}$ | – | 5 | 9 | 15 | ms | 10 | 5 |
| Load short-circuiting detection delay time | $t_{SHORT}$ | – | 150 | 300 | 540 | μs | 10 | 5 |
| Charge overcurrent detection delay time | $t_{CIOV}$ | – | 5 | 9 | 15 | ms | 10 | 5 |

***1.** Since products are not screened at high and low temperature, the specification for this temperature range is guaranteed by design, not tested in production.

### 3. 6 S-8211CAW, S-8211CDD

**Table 16**

| Item | Symbol | Condition | Min. | Typ. | Max. | Unit | Test Condition | Test Circuit |
|---|---|---|---|---|---|---|---|---|
| **Delay Time (Ta = +25°C)** | | | | | | | | |
| Overcharge detection delay time | $t_{CU}$ | – | 0.96 | 1.2 | 1.4 | s | 9 | 5 |
| Overdischarge detection delay time | $t_{DL}$ | – | 120 | 150 | 180 | ms | 9 | 5 |
| Discharge overcurrent detection delay time | $t_{DIOV}$ | – | 3.6 | 4.5 | 5.4 | ms | 10 | 5 |
| Load short-circuiting detection delay time | $t_{SHORT}$ | – | 240 | 300 | 360 | μs | 10 | 5 |
| Charge overcurrent detection delay time | $t_{CIOV}$ | – | 7.2 | 9 | 11 | ms | 10 | 5 |
| **Delay Time (Ta = –40°C to +85°C)*1** | | | | | | | | |
| Overcharge detection delay time | $t_{CU}$ | – | 0.7 | 1.2 | 2.0 | s | 9 | 5 |
| Overdischarge detection delay time | $t_{DL}$ | – | 83 | 150 | 255 | ms | 9 | 5 |
| Discharge overcurrent detection delay time | $t_{DIOV}$ | – | 2.5 | 4.5 | 7.7 | ms | 10 | 5 |
| Load short-circuiting detection delay time | $t_{SHORT}$ | – | 150 | 300 | 540 | μs | 10 | 5 |
| Charge overcurrent detection delay time | $t_{CIOV}$ | – | 5 | 9 | 15 | ms | 10 | 5 |

***1.** Since products are not screened at high and low temperature, the specification for this temperature range is guaranteed by design, not tested in production.

### 3. 7 S-8211CBN

**Table 17**

| Item | Symbol | Condition | Min. | Typ. | Max. | Unit | Test Condition | Test Circuit |
|---|---|---|---|---|---|---|---|---|
| **Delay Time (Ta = +25°C)** | | | | | | | | |
| Overcharge detection delay time | $t_{CU}$ | – | 458 | 573 | 687 | ms | 9 | 5 |
| Overdischarge detection delay time | $t_{DL}$ | – | 120 | 150 | 180 | ms | 9 | 5 |
| Discharge overcurrent detection delay time | $t_{DIOV}$ | – | 3.6 | 4.5 | 5.4 | ms | 10 | 5 |
| Load short-circuiting detection delay time | $t_{SHORT}$ | – | 240 | 300 | 360 | μs | 10 | 5 |
| Charge overcurrent detection delay time | $t_{CIOV}$ | – | 3.6 | 4.5 | 5.4 | ms | 10 | 5 |
| **Delay Time (Ta = –40°C to +85°C)*1** | | | | | | | | |
| Overcharge detection delay time | $t_{CU}$ | – | 334 | 573 | 955 | ms | 9 | 5 |
| Overdischarge detection delay time | $t_{DL}$ | – | 83 | 150 | 255 | ms | 9 | 5 |
| Discharge overcurrent detection delay time | $t_{DIOV}$ | – | 2.5 | 4.5 | 7.7 | ms | 10 | 5 |
| Load short-circuiting detection delay time | $t_{SHORT}$ | – | 150 | 300 | 540 | μs | 10 | 5 |
| Charge overcurrent detection delay time | $t_{CIOV}$ | – | 2.5 | 4.5 | 7.7 | ms | 10 | 5 |

***1.** Since products are not screened at high and low temperature, the specification for this temperature range is guaranteed by design, not tested in production.

### 3. 8 S-8211CCE, S-8211CCH, S-8211CCJ

**Table 18**

| Item | Symbol | Condition | Min. | Typ. | Max. | Unit | Test Condition | Test Circuit |
|---|---|---|---|---|---|---|---|---|
| **Delay Time (Ta = +25°C)** | | | | | | | | |
| Overcharge detection delay time | $t_{CU}$ | – | 0.96 | 1.2 | 1.4 | s | 9 | 5 |
| Overdischarge detection delay time | $t_{DL}$ | – | 61 | 75 | 90 | ms | 9 | 5 |
| Discharge overcurrent detection delay time | $t_{DIOV}$ | – | 7.2 | 9 | 11 | ms | 10 | 5 |
| Load short-circuiting detection delay time | $t_{SHORT}$ | – | 240 | 300 | 360 | μs | 10 | 5 |
| Charge overcurrent detection delay time | $t_{CIOV}$ | – | 7.2 | 9 | 11 | ms | 10 | 5 |
| **Delay Time (Ta = –40°C to +85°C)*1** | | | | | | | | |
| Overcharge detection delay time | $t_{CU}$ | – | 0.7 | 1.2 | 2.0 | s | 9 | 5 |
| Overdischarge detection delay time | $t_{DL}$ | – | 41 | 75 | 128 | ms | 9 | 5 |
| Discharge overcurrent detection delay time | $t_{DIOV}$ | – | 5 | 9 | 15 | ms | 10 | 5 |
| Load short-circuiting detection delay time | $t_{SHORT}$ | – | 150 | 300 | 540 | μs | 10 | 5 |
| Charge overcurrent detection delay time | $t_{CIOV}$ | – | 5 | 9 | 15 | ms | 10 | 5 |

***1.** Since products are not screened at high and low temperature, the specification for this temperature range is guaranteed by design, not tested in production.

### 3. 9 S-8211CDP

**Table 19**

| Item | Symbol | Condition | Min. | Typ. | Max. | Unit | Test Condition | Test Circuit |
|---|---|---|---|---|---|---|---|---|
| **Delay Time (Ta = +25°C)** | | | | | | | | |
| Overcharge detection delay time | $t_{CU}$ | – | 0.96 | 1.2 | 1.4 | s | 9 | 5 |
| Overdischarge detection delay time | $t_{DL}$ | – | 240 | 300 | 360 | ms | 9 | 5 |
| Discharge overcurrent detection delay time | $t_{DIOV}$ | – | 7.2 | 9 | 11 | ms | 10 | 5 |
| Load short-circuiting detection delay time | $t_{SHORT}$ | – | 240 | 300 | 360 | μs | 10 | 5 |
| Charge overcurrent detection delay time | $t_{CIOV}$ | – | 7.2 | 9 | 11 | ms | 10 | 5 |
| **Delay Time (Ta = –40°C to +85°C)*1** | | | | | | | | |
| Overcharge detection delay time | $t_{CU}$ | – | 0.7 | 1.2 | 2.0 | s | 9 | 5 |
| Overdischarge detection delay time | $t_{DL}$ | – | 166 | 300 | 510 | ms | 9 | 5 |
| Discharge overcurrent detection delay time | $t_{DIOV}$ | – | 5 | 9 | 15 | ms | 10 | 5 |
| Load short-circuiting detection delay time | $t_{SHORT}$ | – | 150 | 300 | 540 | μs | 10 | 5 |
| Charge overcurrent detection delay time | $t_{CIOV}$ | – | 5 | 9 | 15 | ms | 10 | 5 |

***1.** Since products are not screened at high and low temperature, the specification for this temperature range is guaranteed by design, not tested in production.

## ■ Test Circuits

**Caution Unless otherwise specified, the output voltage levels "H" and "L" at CO pin ($V_{CO}$) and DO pin ($V_{DO}$) are judged by the threshold voltage (1.0 V) of the N-channel FET. Judge the CO pin level with respect to $V_{VM}$ and the DO pin level with respect to $V_{SS}$.**

### 1. Overcharge detection voltage, overcharge release voltage (Test condition 1, test circuit 1)

Overcharge detection voltage ($V_{CU}$) is defined as the voltage between the VDD pin and VSS pin at which $V_{CO}$ goes from "H" to "L" when the voltage V1 is gradually increased from the starting condition of V1 = 3.5 V. Overcharge release voltage ($V_{CL}$) is defined as the voltage between the VDD pin and VSS pin at which $V_{CO}$ goes from "L" to "H" when the voltage V1 is then gradually decreased. Overcharge hysteresis voltage ($V_{HC}$) is defined as the difference between overcharge detection voltage ($V_{CU}$) and overcharge release voltage ($V_{CL}$).

### 2. Overdischarge detection voltage, overdischarge release voltage (Test condition 2, test circuit 2)

Overdischarge detection voltage ($V_{DL}$) is defined as the voltage between the VDD pin and VSS pin at which $V_{DO}$ goes from "H" to "L" when the voltage V1 is gradually decreased from the starting condition of V1 = 3.5 V, V2 = 0 V. Overdischarge release voltage ($V_{DU}$) is defined as the voltage between the VDD pin and VSS pin at which $V_{DO}$ goes from "L" to "H" when the voltage V1 is then gradually increased. Overdischarge hysteresis voltage ($V_{HD}$) is defined as the difference between overdischarge release voltage ($V_{DU}$) and overdischarge detection voltage ($V_{DL}$).

### 3. Discharge overcurrent detection voltage (Test condition 3, test circuit 2)

Discharge overcurrent detection voltage ($V_{DIOV}$) is defined as the voltage between the VM pin and VSS pin whose delay time for changing $V_{DO}$ from "H" to "L" lies between the minimum and the maximum value of discharge overcurrent delay time when the voltage V2 is increased rapidly (within 10 μs) from the starting condition of V1 = 3.5 V, V2 = 0 V.

### 4. Load short-circuiting detection voltage (Test condition 3, test circuit 2)

Load short-circuiting detection voltage ($V_{SHORT}$) is defined as the voltage between the VM pin and VSS pin whose delay time for changing $V_{DO}$ from "H" to "L" lies between the minimum and the maximum value of load short-circuiting delay time when the voltage V2 is increased rapidly (within 10 μs) from the starting condition of V1 = 3.5 V, V2 = 0 V.

### 5. Charge overcurrent detection voltage (Test condition 4, test circuit 2)

Charge overcurrent detection voltage ($V_{CIOV}$) is defined as the voltage between the VM pin and VSS pin whose delay time for changing $V_{CO}$ from "H" to "L" lies between the minimum and the maximum value of charge overcurrent delay time when the voltage V2 is decreased rapidly (within 10 μs) from the starting condition of V1 = 3.5 V, V2 = 0 V.

### 6. Current consumption during operation (Test condition 5, test circuit 2)

The current consumption during operation ($I_{OPE}$) is the current that flows through the VDD pin ($I_{DD}$) under the set conditions of V1 = 3.5 V and V2 = 0 V (normal status).

## 7. Current consumption during power-down, current consumption during overdischarge (Test condition 5, test circuit 2)

### 7. 1 With power-down function

The current consumption during power-down ($I_{PDN}$) is the current that flows through the VDD pin ($I_{DD}$) under the set condition of V1 = V2 = 1.5 V (overdischarge status).

### 7. 2 Without power-down function

The current consumption during overdischarge ($I_{OPED}$) is the current that flows through the VDD pin ($I_{DD}$) under the set condition of V1 = V2 = 1.5 V (overdischarge status).

## 8. Resistance between VM pin and VDD pin (Test condition 6, test circuit 3)

The resistance between VM pin and VDD pin ($R_{VMD}$) is the resistance between VM pin and VDD pin under the set conditions of V1 = 1.8 V, V2 = 0 V.

## 9. Resistance between VM pin and VSS pin (Test condition 6, test circuit 3)

The resistance between VM pin and VSS pin ($R_{VMS}$) is the resistance between VM pin and VSS pin under the set conditions of V1 = 3.5 V, V2 = 1.0 V.

## 10. CO pin resistance "H" (Test condition 7, test circuit 4)

The CO pin resistance "H" ($R_{COH}$) is the resistance at the CO pin under the set conditions of V1 = 3.5 V, V2 = 0 V, V3 = 3.0 V.

## 11. CO pin resistance "L" (Test condition 7, test circuit 4)

The CO pin resistance "L" ($R_{COL}$) is the resistance at the CO pin under the set conditions of V1 = 4.5 V, V2 = 0 V, V3 = 0.5 V.

## 12. DO pin resistance "H" (Test condition 8, test circuit 4)

The DO pin resistance "H" ($R_{DOH}$) is the resistance at the DO pin under the set conditions of V1 = 3.5 V, V2 = 0 V, V4 = 3.0 V.

## 13. DO pin resistance "L" (Test condition 8, test circuit 4)

The DO pin resistance "L" ($R_{DOL}$) is the resistance at the DO pin under the set conditions of V1 = 1.8 V, V2 = 0 V, V4 = 0.5 V.

## 14. Overcharge detection delay time (Test condition 9, test circuit 5)

The overcharge detection delay time ($t_{CU}$) is the time needed for $V_{CO}$ to change from "H" to "L" just after the voltage V1 momentarily increases (within 10 μs) from overcharge detection voltage ($V_{CU}$) − 0.2 V to overcharge detection voltage ($V_{CU}$) + 0.2 V under the set condition of V2 = 0 V.

## 15. Overdischarge detection delay time (Test condition 9, test circuit 5)

The overdischarge detection delay time ($t_{DL}$) is the time needed for $V_{DO}$ to change from "H" to "L" just after the voltage V1 momentarily decreases (within 10 μs) from overdischarge detection voltage ($V_{DL}$) + 0.2 V to overdischarge detection voltage ($V_{DL}$) − 0.2 V under the set condition of V2 = 0 V.

### 16. Discharge overcurrent detection delay time (Test condition 10, test circuit 5)

Discharge overcurrent detection delay time ($t_{DIOV}$) is the time needed for $V_{DO}$ to go to "L" after the voltage V2 momentarily increases (within 10 μs) from 0 V to 0.35 V under the set conditions of V1 = 3.5 V, V2 = 0 V.

### 17. Load short-circuiting detection delay time (Test condition 10, test circuit 5)

Load short-circuiting detection delay time ($t_{SHORT}$) is the time needed for $V_{DO}$ to go to "L" after the voltage V2 momentarily increases (within 10 μs) from 0 V to 1.6 V under the set conditions of V1 = 3.5 V, V2 = 0 V.

### 18. Charge overcurrent detection delay time (Test condition 10, test circuit 5)

Charge overcurrent detection delay time ($t_{CIOV}$) is the time needed for $V_{CO}$ to go to "L" after the voltage V2 momentarily decreases (within 10 μs) from 0 V to − 0.3 V under the set conditions of V1 = 3.5 V, V2 = 0 V.

### 19. 0 V battery charge starting charger voltage (0 V battery charge function "available") (Test condition 11, test circuit 2)

The 0 V battery charge starting charger voltage ($V_{0CHA}$) is defined as the voltage between the VDD pin and VM pin at which $V_{CO}$ goes to "H" ($V_{VM}$ + 0.1 V or higher) when the voltage V2 is gradually decreased from the starting condition of V1 = V2 = 0 V.

### 20. 0 V battery charge inhibition battery voltage (0 V battery charge function "unavailable") (Test condition 12, test circuit 2)

The 0 V battery charge inhibition battery voltage ($V_{0INH}$) is defined as the voltage between the VDD pin and VSS pin at which $V_{CO}$ goes to "H" ($V_{VM}$ + 0.1 V or higher) when the voltage V1 is gradually increased from the starting conditions of V1 = 0 V, V2 = −4 V.

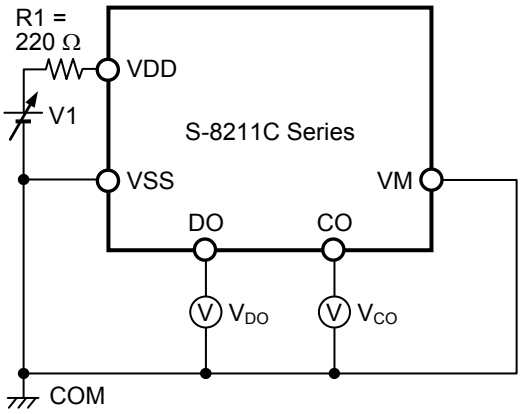


**Figure 5 Test Circuit 1**

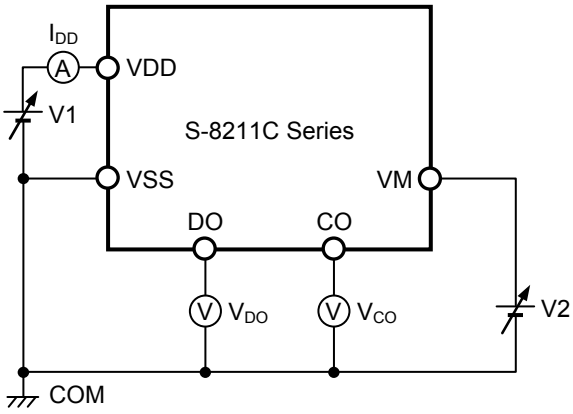


**Figure 6 Test Circuit 2**

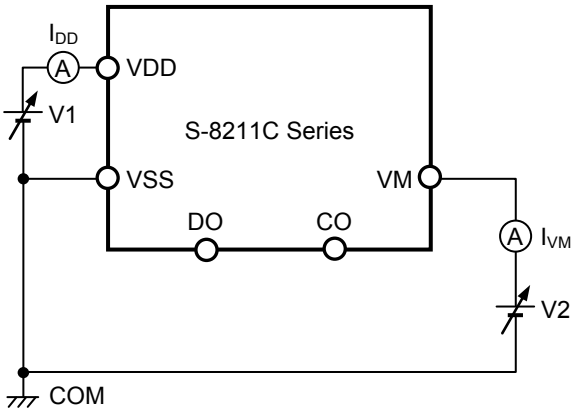


**Figure 7 Test Circuit 3**

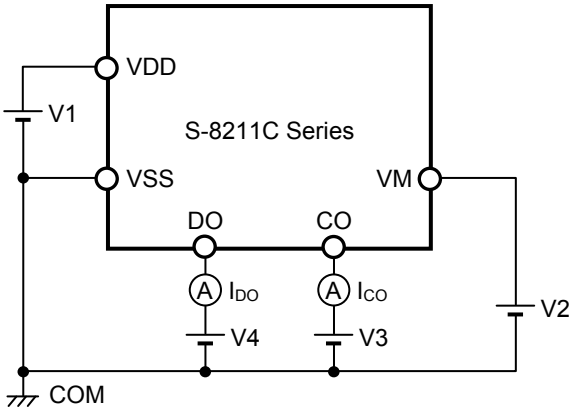


**Figure 8 Test Circuit 4**

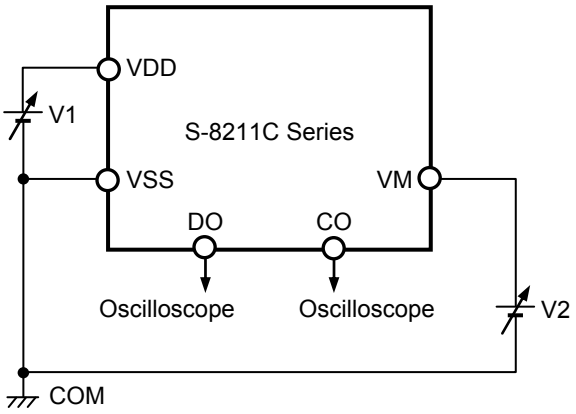


**Figure 9 Test Circuit 5**

## ■ Operation

**Remark** Refer to "■ **Battery Protection IC Connection Example**".

### 1. Normal status

The S-8211C Series monitors the voltage of the battery connected between the VDD pin and VSS pin and the voltage difference between the VM pin and VSS pin to control charging and discharging. When the battery voltage is in the range from overdischarge detection voltage ($V_{DL}$) to overcharge detection voltage ($V_{CU}$), and the VM pin voltage is in the range from the charge overcurrent detection voltage ($V_{CIOV}$) to discharge overcurrent detection voltage ($V_{DIOV}$), the S-8211C Series turns both the charging and discharging control FETs on. This condition is called the normal status, and in this condition charging and discharging can be carried out freely.
The resistance ($R_{VMD}$) between the VM pin and VDD pin, and the resistance ($R_{VMS}$) between the VM pin and VSS pin are not connected in the normal status.

**Caution When the battery is connected for the first time, discharging may not be enabled. In this case, short the VM pin and VSS pin, or set the VM pin's voltage at the level of the charge overcurrent detection voltage ($V_{CIOV}$) or more and the discharge overcurrent detection voltage ($V_{DIOV}$) or less by connecting the charger. The S-8211C Series then returns to the normal status.**

### 2. Overcharge status

When the battery voltage becomes higher than overcharge detection voltage ($V_{CU}$) during charging in the normal status and detection continues for the overcharge detection delay time ($t_{CU}$) or longer, the S-8211C Series turns the charging control FET off to stop charging. This condition is called the overcharge status.
The resistance ($R_{VMD}$) between the VM pin and VDD pin, and the resistance ($R_{VMS}$) between the VM pin and VSS pin are not connected in the overcharge status.
The overcharge status is released in the following two cases ( (1) and (2) ).

(1) In the case that the VM pin voltage is higher than or equal to the charge overcurrent detection voltage ($V_{CIOV}$), and is lower than the discharge overcurrent detection voltage ($V_{DIOV}$), the S-8211C Series releases the overcharge status when the battery voltage falls below the overcharge release voltage ($V_{CL}$).
(2) In the case that the VM pin voltage is higher than or equal to the discharge overcurrent detection voltage ($V_{DIOV}$), the S-8211C Series releases the overcharge status when the battery voltage falls below the overcharge detection voltage ($V_{CU}$).

The discharge is started by connecting a load after the overcharge detection, the VM pin voltage rises more than the VSS pin voltage due to the $V_f$ voltage of the parasitic diode, because the discharge current flows through the parasitic diode in the charging control FET. If this VM pin voltage is higher than or equal to the discharge overcurrent detection voltage ($V_{DIOV}$), the S-8211C Series releases the overcharge status when the battery voltage is lower than or equal to the overcharge detection voltage ($V_{CU}$).
For the actual application boards, changing the battery voltage and the charger voltage simultaneously enables to measure the overcharge release voltage ($V_{CL}$). In this case, the charger is always necessary to have the equivalent voltage level to the battery voltage. The charger keeps VM pin voltage higher than or equal to the charge overcurrent detection voltage ($V_{CIOV}$) and lower than or equal to the discharge overcurrent detection voltage ($V_{DIOV}$). The S-8211C Series releases the overcharge status when the battery voltage falls below the overcharge release voltage ($V_{CL}$).

**Caution**
1. **If the battery is charged to a voltage higher than overcharge detection voltage ($V_{CU}$) and the battery voltage does not fall below overcharge detection voltage ($V_{CU}$) even when a heavy load is connected, discharge overcurrent detection and load short-circuiting detection do not function until the battery voltage falls below overcharge detection voltage ($V_{CU}$). Since an actual battery has an internal impedance of tens of mΩ, the battery voltage drops immediately after a heavy load that causes overcurrent is connected, and discharge overcurrent detection and load short-circuiting detection function.**
2. **When a charger is connected after overcharge detection, the overcharge status is not released even if the battery voltage is below overcharge release voltage ($V_{CL}$). The overcharge status is released when the VM pin voltage goes over the charge overcurrent detection voltage ($V_{CIOV}$) by removing the charger.**

## 3. Overdischarge status

### 3. 1 With power-down function

When the battery voltage falls below overdischarge detection voltage ($V_{DL}$) during discharging in the normal status and the detection continues for the overdischarge detection delay time ($t_{DL}$) or longer, the S-8211C Series turns the discharging control FET off to stop discharging. This condition is called the overdischarge status. Under the overdischarge status, the VM pin voltage is pulled up by the resistor between the VM pin and VDD pin in the S-8211C Series ($R_{VMD}$). When voltage difference between the VM pin and VDD pin then is 1.3 V typ. or lower, the current consumption is reduced to the power-down current consumption ($I_{PDN}$). This condition is called the power-down status.
The resistance ($R_{VMS}$) between the VM pin and VSS pin is not connected in the power-down status and the overdischarge status.
The power-down status is released when a charger is connected and the voltage difference between the VM pin and VDD pin becomes 1.3 V typ. or higher.
When a battery in the overdischarge status is connected to a charger and provided that the VM pin voltage is lower than −0.7 V typ., the S-8211C Series releases the overdischarge status and turns the discharging FET on when the battery voltage reaches overdischarge detection voltage ($V_{DL}$) or higher.
When a battery in the overdischarge status is connected to a charger and provided that the VM pin voltage is not lower than −0.7 V typ., the S-8211C Series releases the overdischarge status when the battery voltage reaches overdischarge release voltage ($V_{DU}$) or higher.

### 3. 2 Without power-down function

When the battery voltage falls below overdischarge detection voltage ($V_{DL}$) during discharging in the normal status and the detection continues for the overdischarge detection delay time ($t_{DL}$) or longer, the S-8211C Series turns the discharging control FET off to stop discharging. This condition is called the overdischarge status. Under the overdischarge status, the VM pin voltage is pulled up by the resistor between the VM pin and VDD pin in the S-8211C Series ($R_{VMD}$).
The resistance ($R_{VMS}$) between the VM pin and VSS pin is not connected in the overdischarge status.
When a battery in the overdischarge status is connected to a charger and provided that the VM pin voltage is lower than −0.7 V typ., the S-8211C Series releases the overdischarge status and turns the discharging FET on when the battery voltage reaches overdischarge detection voltage ($V_{DL}$) or higher.
When a battery in the overdischarge status is connected to a charger and provided that the VM pin voltage is not lower than −0.7 V typ., the S-8211C Series releases the overdischarge status when the battery voltage reaches overdischarge release voltage ($V_{DU}$) or higher.

## 4. Discharge overcurrent status (discharge overcurrent, load short-circuiting)

When a battery in the normal status is in the status where the VM pin voltage is equal to or higher than the discharge overcurrent detection voltage ($V_{DIOV}$) because the discharge current is higher than the specified value and the status lasts for the discharge overcurrent detection delay time ($t_{DIOV}$), the discharge control FET is turned off and discharging is stopped. This status is called the discharge overcurrent status.
In the discharge overcurrent status, the VM pin and VSS pin are shorted by the resistor between VM pin and VSS pin ($R_{VMS}$) in the S-8211C Series. However, the VM pin voltage is at the $V_{DD}$ potential due to the load as long as the load is connected. When the load is disconnected completely, the VM pin returns to the $V_{SS}$ potential.
If the S-8211C Series detects that the VM pin voltage returns to discharge overcurrent detection voltage ($V_{DIOV}$) or lower, the discharge overcurrent status is restored to the normal status.
The S-8211C Series will be restored to the normal status from discharge overcurrent detection status even when the VM pin voltage becomes the discharge overcurrent detection voltage ($V_{DIOV}$) or lower by connecting the charger.
The resistance ($R_{VMD}$) between the VM pin and VDD pin is not connected in the discharge overcurrent status.

### 5. Charge overcurrent status

When a battery in the normal status is in the status where the VM pin voltage is lower than the charge overcurrent detection voltage ($V_{CIOV}$) because the charge current is higher than the specified value and the status lasts for the charge overcurrent detection delay time ($t_{CIOV}$), the charge control FET is turned off and charging is stopped. This status is called the charge overcurrent status.
The S-8211C Series will be restored to the normal status from the charge overcurrent status when the VM pin voltage returns to charge overcurrent detection voltage ($V_{CIOV}$) or higher by removing the charger.
The charge overcurrent detection function does not work in the overdischarge status.
The resistance ($R_{VMD}$) between the VM pin and VDD pin, and the resistance ($R_{VMS}$) between the VM pin and VSS pin are not connected in the charge overcurrent status.

### 6. 0 V Battery charge function "available"

This function is used to recharge a connected battery whose voltage is 0 V due to self-discharge. When the 0 V battery charge starting charger voltage ($V_{0CHA}$) or a higher voltage is applied between the EB+ and EB− pins by connecting a charger, the charging control FET gate is fixed to the VDD pin voltage.
When the voltage between the gate and source of the charging control FET becomes equal to or higher than the turn-on voltage due to the charger voltage, the charging control FET is turned on to start charging. At this time, the discharging control FET is off and the charging current flows through the internal parasitic diode in the discharging control FET. When the battery voltage becomes equal to or higher than overdischarge release voltage ($V_{DU}$), the S-8211C Series enters the normal status.

**Caution 1. Some battery providers do not recommend charging for a completely self-discharged battery. Please ask the battery provider to determine whether to enable or inhibit the 0 V battery charge function.**
**2. The 0 V battery charge function has higher priority than the charge overcurrent detection function. Consequently, a product in which use of the 0 V battery charge function is enabled charges a battery forcibly and the charge overcurrent cannot be detected when the battery voltage is lower than overdischarge detection voltage ($V_{DL}$).**

### 7. 0 V Battery charge function "unavailable"

This function inhibits recharging when a battery that is internally short-circuited (0 V battery) is connected. When the battery voltage is the 0 V battery charge inhibition battery voltage ($V_{0INH}$) or lower, the charging control FET gate is fixed to the EB− pin voltage to inhibit charging. When the battery voltage is the 0 V battery charge inhibition battery voltage ($V_{0INH}$) or higher, charging can be performed.

**Caution Some battery providers do not recommend charging for a completely self-discharged battery. Please ask the battery provider to determine whether to enable or inhibit the 0 V battery charge function.**

### 8. Delay circuit

The detection delay times are determined by dividing a clock of approximately 3.5 kHz by the counter.

**Remark 1.** The discharge overcurrent detection delay time ($t_{DIOV}$) and the load short-circuiting detection delay time ($t_{SHORT}$) start when the discharge overcurrent detection voltage ($V_{DIOV}$) is detected. When the load short-circuiting detection voltage ($V_{SHORT}$) is detected over the load short-circuiting detection delay time ($t_{SHORT}$) after the detection of discharge overcurrent detection voltage ($V_{DIOV}$), the S-8211C Series turns the discharging control FET off within the load short-circuiting detection delay time ($t_{SHORT}$) from the time of detecting $V_{SHORT}$.

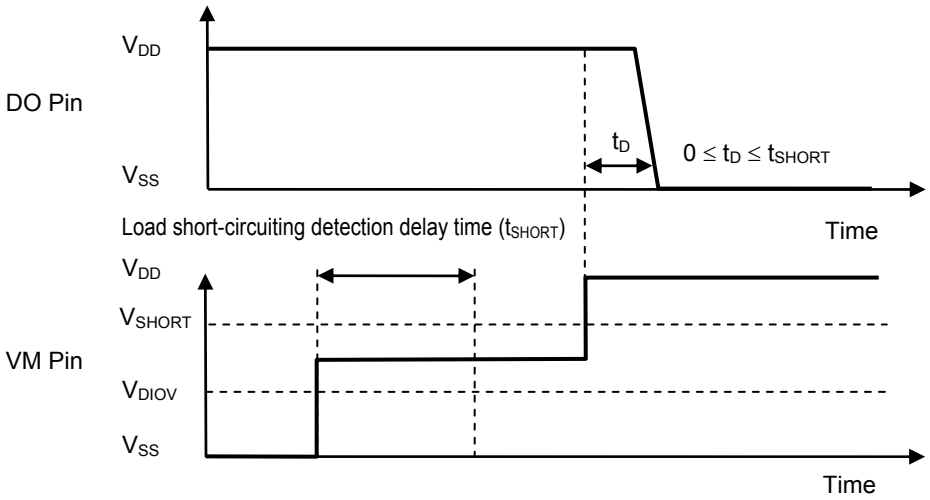


**Figure 10**

**2. With power-down function**

When any overcurrent is detected and the overcurrent continues for longer than the overdischarge detection delay time ($t_{DL}$) without the load being released, the status changes to the power-down status at the point where the battery voltage falls below overdischarge detection voltage ($V_{DL}$).

When the battery voltage falls below overdischarge detection voltage ($V_{DL}$) due to overcurrent, the S-8211C Series turns the discharging control FET off via overcurrent detection. In this case, if the recovery of the battery voltage is so slow that the battery voltage after the overdischarge detection delay time ($t_{DL}$) is still lower than the overdischarge detection voltage ($V_{DL}$), the S-8211C Series shifts to the power-down status.

**Without power-down function**

When any overcurrent is detected and the overcurrent continues for longer than the overdischarge detection delay time ($t_{DL}$) without the load being released, the status changes to the overdischarge status at the point where the battery voltage falls below overdischarge detection voltage ($V_{DL}$).

When the battery voltage falls below overdischarge detection voltage ($V_{DL}$) due to overcurrent, the S-8211C Series turns the discharging control FET off via overcurrent detection. In this case, if the recovery of the battery voltage is so slow that the battery voltage after the overdischarge detection delay time ($t_{DL}$) is still lower than the overdischarge detection voltage ($V_{DL}$), the S-8211C Series shifts to the overdischarge status.

## ■ Timing Charts

### 1. Overcharge detection, overdischarge detection

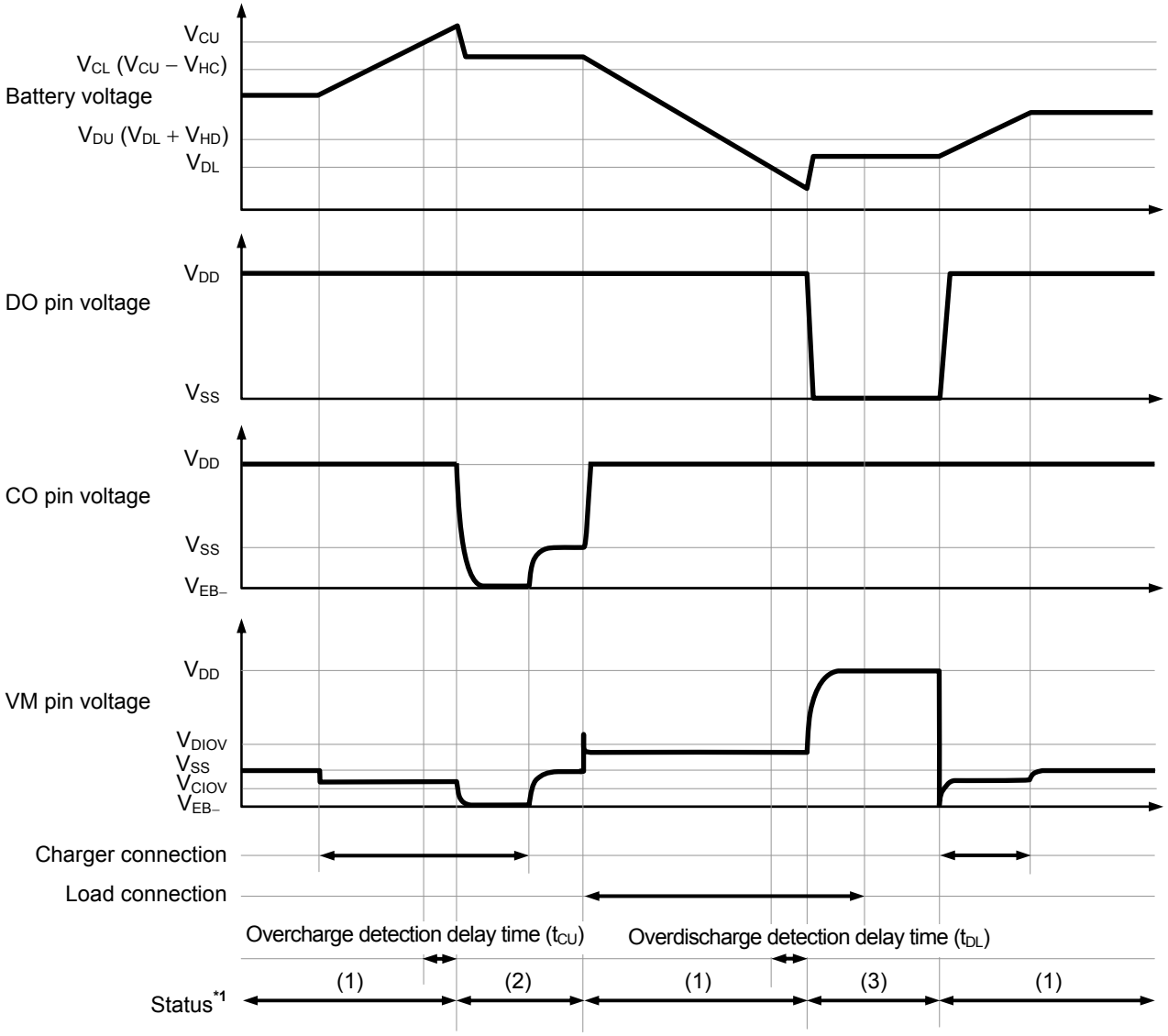


***1.** (1): Normal status
(2): Overcharge status
(3): Overdischarge status

**Remark** The charger is assumed to charge with a constant current.

**Figure 11**

**2. Discharge overcurrent detection**

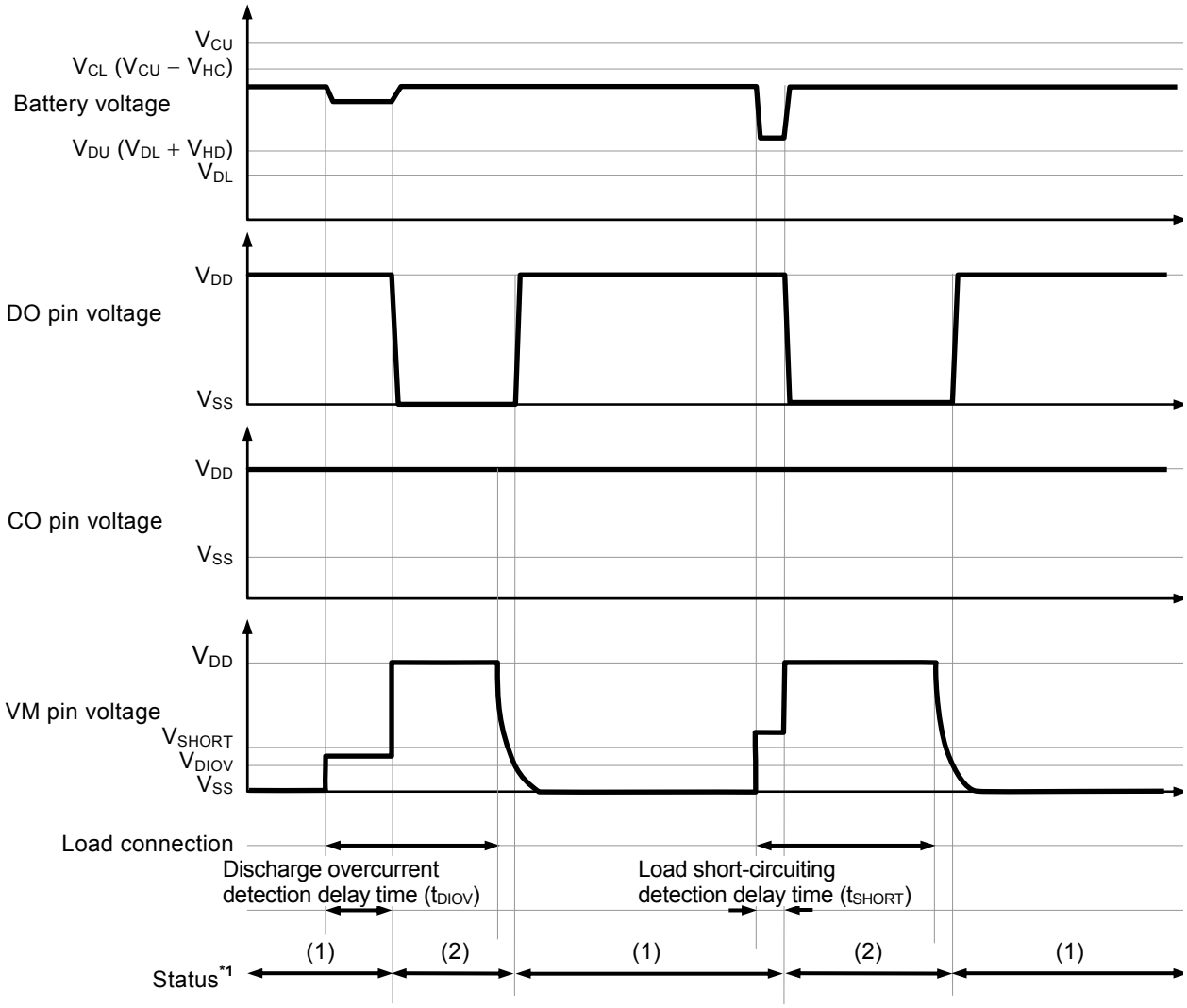


***1.** (1): Normal status
(2): Discharge overcurrent status

**Remark** The charger is assumed to charge with a constant current.

**Figure 12**

### 3. Charge overcurrent detection

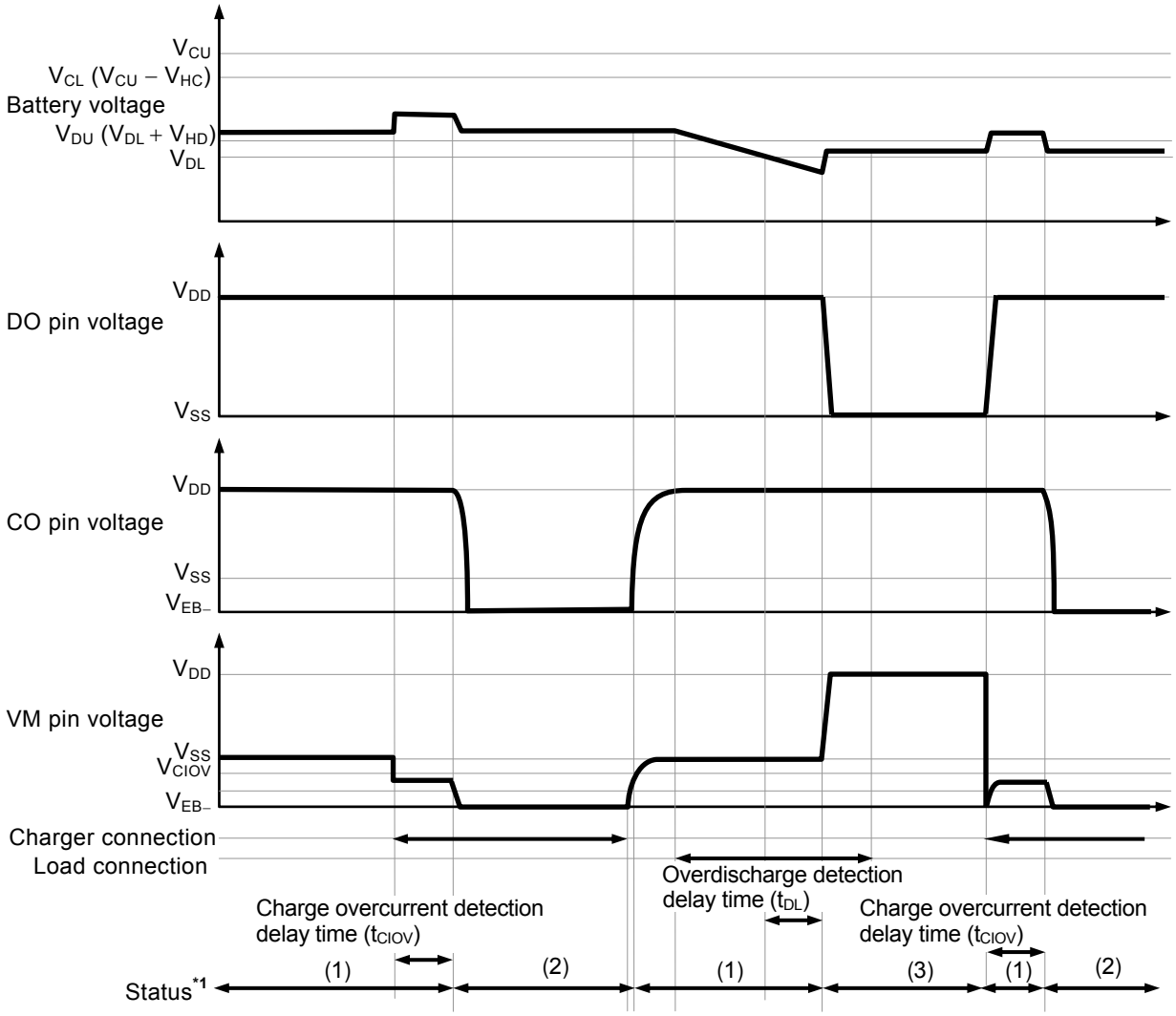


***1.** (1): Normal status
(2): Charge overcurrent status
(3): Overdischarge status

**Remark** The charger is assumed to charge with a constant current.

**Figure 13**

## ■ Battery Protection IC Connection Example

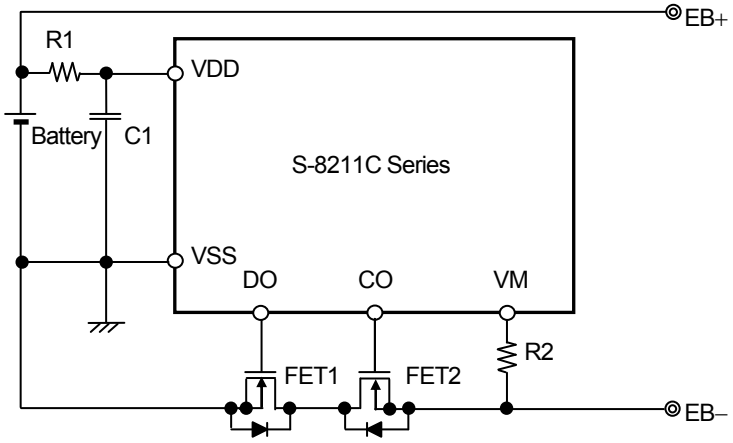


**Figure 14**

**Table 20 Constants for External Components**

| Symbol | Part | Purpose | Min. | Typ. | Max. | Remark |
|---|---|---|---|---|---|---|
| FET1 | N-channel MOS FET | Discharge control | – | – | – | Threshold voltage ≤ Overdischarge detection voltage*1<br>Gate to source withstand voltage ≥ Charger voltage*2 |
| FET2 | N-channel MOS FET | Charge control | – | – | – | Threshold voltage ≤ Overdischarge detection voltage*1<br>Gate to source withstand voltage ≥ Charger voltage*2 |
| R1 | Resistor | ESD protection,<br>For power fluctuation | 100 Ω | 220 Ω | 330 Ω | Resistance should be as small as possible to avoid lowering the overcharge detection accuracy due to current consumption.*3 |
| C1 | Capacitor | For power fluctuation | 0.022 μF | 0.1 μF | 1.0 μF | Connect a capacitor of 0.022 μF or higher between VDD pin and VSS pin.*4 |
| R2 | Resistor | Protection for reverse connection of a charger | 300 Ω | 2 kΩ | 2 kΩ | Select as large a resistance as possible to prevent current when a charger is connected in reverse.*5 |

***1.** If the threshold voltage of a FET is low, the FET may not cut the charge current. If a FET with a threshold voltage equal to or higher than the overdischarge detection voltage is used, discharging may be stopped before overdischarge is detected.

***2.** If the withstand voltage between the gate and source is lower than the charger voltage, the FET may be destroyed.

***3.** If a high resistor is connected to R1, the voltage between VDD pin and VSS pin may exceed the absolute maximum rating when a charger is connected in reverse since the current flows from the charger to the IC. Insert a resistor of 100 Ω or higher as R1 for ESD protection.

***4.** If a capacitor of less than 0.022 μF is connected to C1, DO pin may oscillate when load short-circuiting is detected. Be sure to connect a capacitor of 0.022 μF or higher to C1.

***5.** If a resistor of 2 kΩ or higher is connected to R2, the charge current may not be cut when a high-voltage charger is connected.

**Caution 1. The above constants may be changed without notice.**

**2. It has not been confirmed whether the operation is normal or not in circuits other than the above example of connection. In addition, the example of connection shown above and the constant do not guarantee proper operation. Perform thorough evaluation using the actual application to set the constant.**

## ■ Precautions

- The application conditions for the input voltage, output voltage, and load current should not exceed the package power dissipation.
- Do not apply an electrostatic discharge to this IC that exceeds the performance ratings of the built-in electrostatic protection circuit.
- ABLIC Inc. claims no responsibility for any and all disputes arising out of or in connection with any infringement by products including this IC of patents owned by a third party.

## ■ Characteristics (Typical Data)

### 1. Current consumption

**1. 1 $I_{OPE}$ vs. Ta**

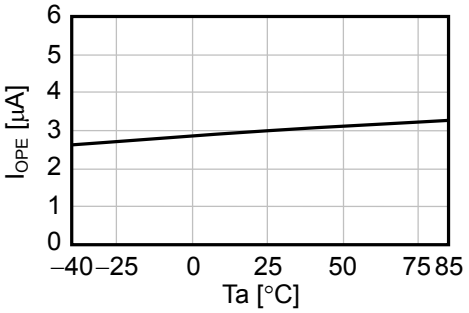


**1. 2 $I_{PDN}$ vs. Ta**

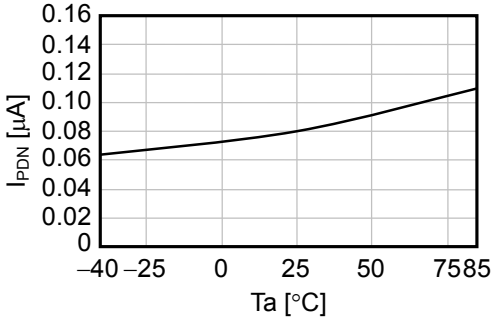


**1. 3 $I_{OPE}$ vs. $V_{DD}$**

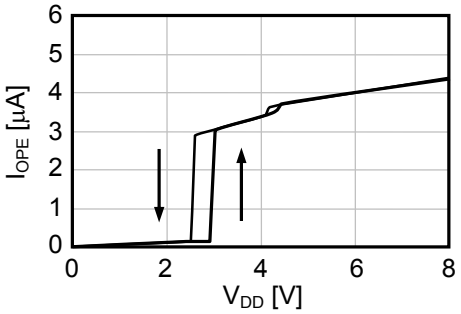


### 2. Overcharge detection / release voltage, overdischarge detection / release voltage, overcurrent detection voltage, and delay time

**2. 1 $V_{CU}$ vs. Ta**

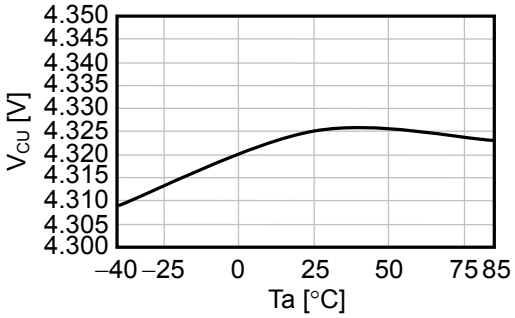


**2. 2 $V_{CL}$ vs. Ta**

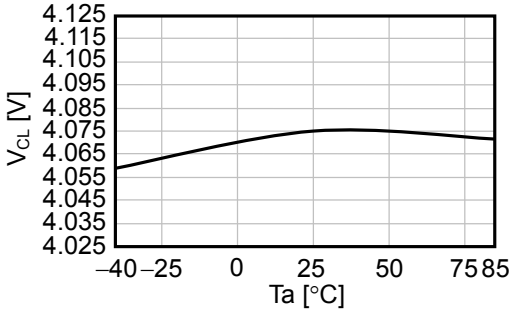


**2. 3 $V_{DU}$ vs. Ta**

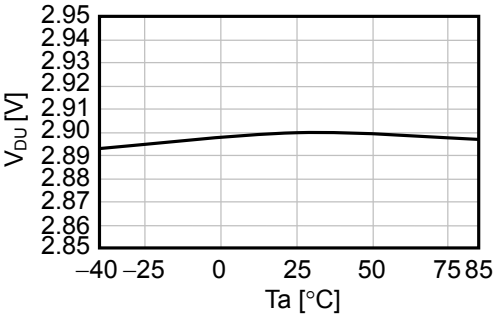


**2. 4 $V_{DL}$ vs. Ta**

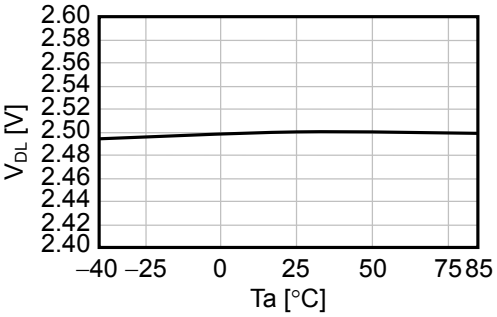

**2. 5 $t_{CU}$ vs. Ta**

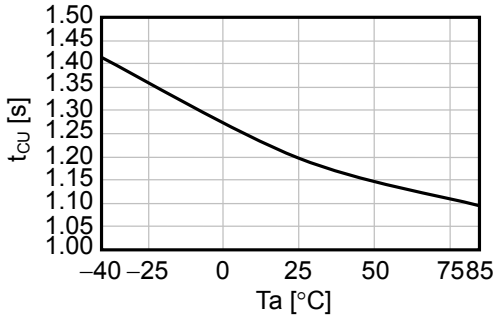


**2. 6 $t_{DL}$ vs. Ta**

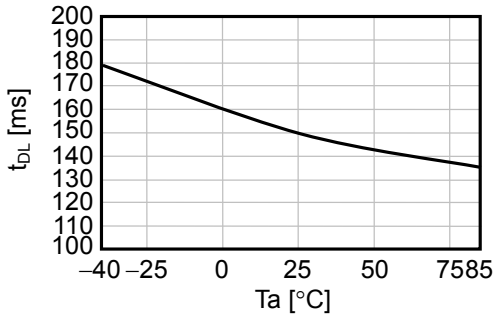


**2. 7 $V_{DIOV}$ vs. Ta**

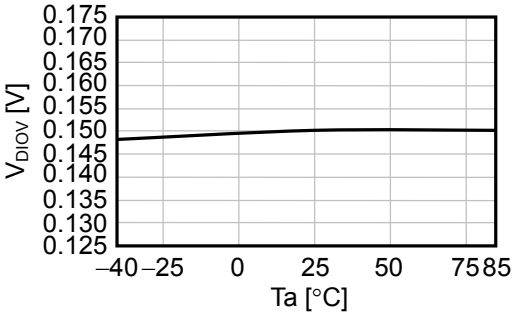


**2. 8 $t_{DIOV}$ vs. $V_{DD}$**

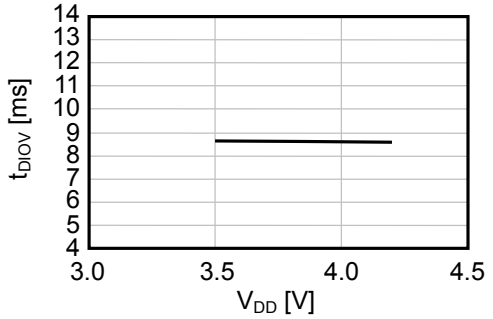


**2. 9 $t_{DIOV}$ vs. Ta**

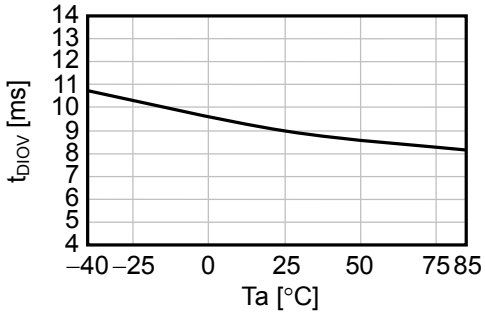


**2. 10 $V_{CIOV}$ vs. Ta**

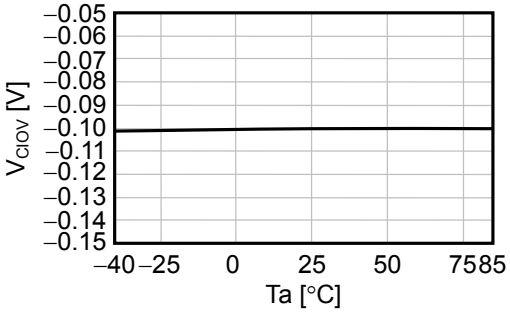


**2. 11 $t_{CIOV}$ vs. $V_{DD}$**

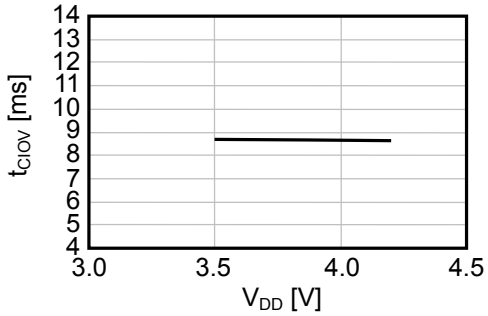


**2. 12 $t_{CIOV}$ vs. Ta**

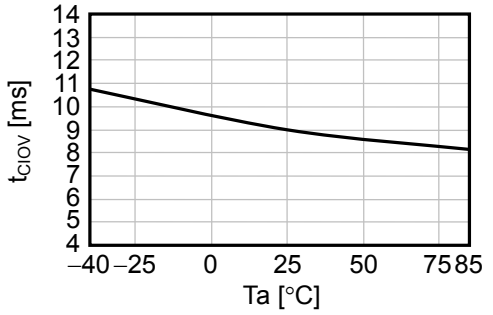

**2. 13 $V_{SHORT}$ vs. Ta**

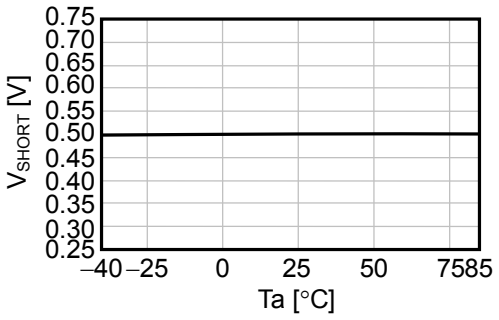


**2. 14 $t_{SHORT}$ vs. $V_{DD}$**

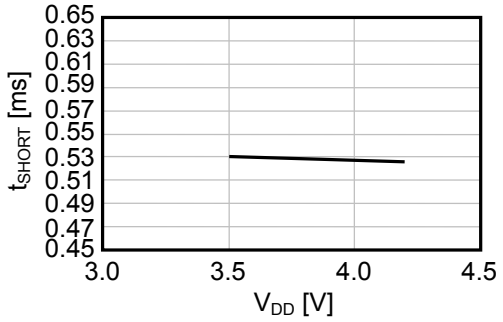


**2. 15 $t_{SHORT}$ vs. Ta**

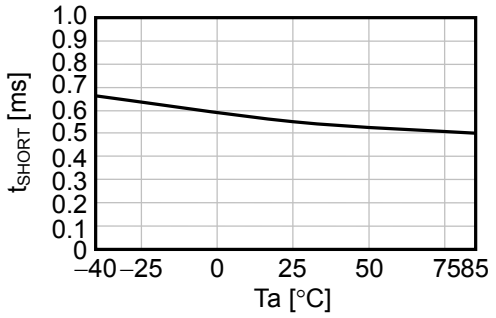

### 3. CO pin / DO pin

**3. 1 $I_{COH}$ vs. $V_{CO}$**

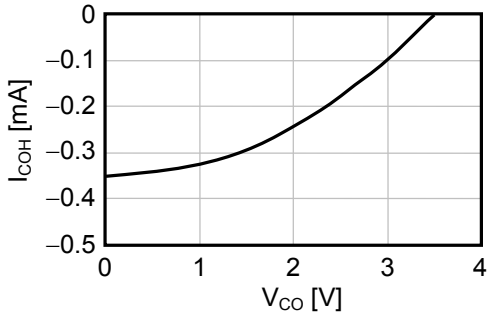


**3. 2 $I_{COL}$ vs. $V_{CO}$**

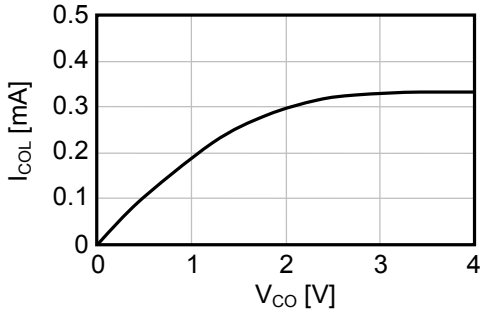


**3. 3 $I_{DOH}$ vs. $V_{DO}$**

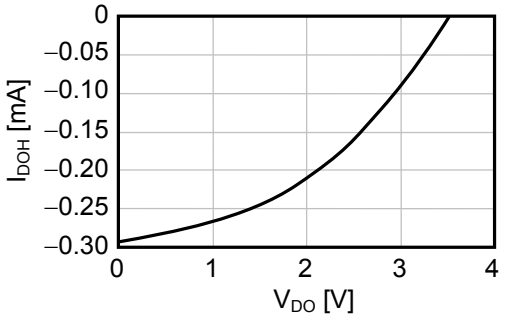


**3. 4 $I_{DOL}$ vs. $V_{DO}$**

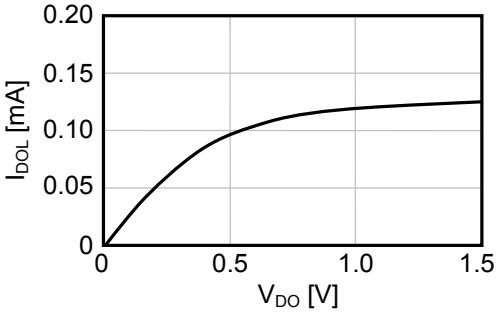

## ■ Marking Specifications

### 1. SOT-23-5

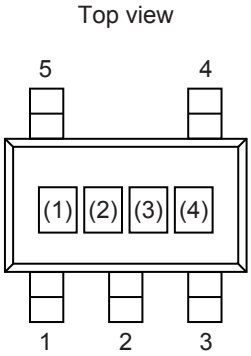


(1) to (3): Product code (refer to **Product name vs. Product code**)
(4): Lot number

**Product name vs. Product code**

| Product Name | Product Code | | |
|---|---|---|---|
| | (1) | (2) | (3) |
| S-8211CAA-M5T1x | R | Z | A |
| S-8211CAB-M5T1x | R | Z | B |
| S-8211CAD-M5T1x | R | Z | D |
| S-8211CAE-M5T1x | R | Z | E |
| S-8211CAF-M5T1x | R | Z | F |
| S-8211CAH-M5T1x | R | Z | H |
| S-8211CAI-M5T1x | R | Z | I |
| S-8211CAJ-M5T1x | R | Z | J |
| S-8211CAK-M5T1x | R | Z | K |
| S-8211CAL-M5T1x | R | Z | L |
| S-8211CAM-M5T1x | R | Z | M |
| S-8211CAN-M5T1x | R | Z | N |
| S-8211CAO-M5T1x | R | Z | O |
| S-8211CAP-M5T1x | R | Z | P |
| S-8211CAQ-M5T1x | R | Z | Q |
| S-8211CAR-M5T1x | R | Z | R |
| S-8211CAS-M5T1x | R | Z | S |
| S-8211CAT-M5T1x | R | Z | T |

| Product Name | Product Code | | |
|---|---|---|---|
| | (1) | (2) | (3) |
| S-8211CAU-M5T1x | R | Z | U |
| S-8211CAV-M5T1x | R | Z | V |
| S-8211CAY-M5T1x | R | Z | Y |
| S-8211CAZ-M5T1x | R | Z | Z |
| S-8211CBV-M5T1x | R | 7 | V |
| S-8211CCD-M5T1U | R | 8 | D |
| S-8211CCJ-M5T1U | R | 8 | J |
| S-8211CCK-M5T1U | R | 8 | K |
| S-8211CCQ-M5T1U | R | 8 | Q |
| S-8211CCR-M5T1U | R | 8 | R |
| S-8211CCT-M5T1U | R | 8 | T |
| S-8211CCV-M5T1U | R | 8 | V |
| S-8211CCW-M5T1U | R | 8 | W |
| S-8211CDB-M5T1U | R | 6 | B |
| S-8211CDD-M5T1U | R | 6 | D |
| S-8211CDG-M5T1U | R | 6 | G |
| S-8211CDJ-M5T1U | R | 6 | J |
| S-8211CDN-M5T1U | R | 6 | N |

**Remark 1.** x: G or U
**2.** Please select products of environmental code = U for Sn 100%, halogen-free products.

## 2. SNT-6A

Top view

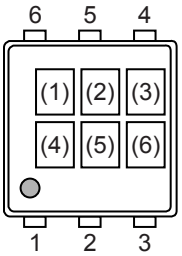


(1) to (3): Product code (refer to **Product name vs. Product code**)
(4) to (6): Lot number

**Product name vs. Product code**

| Product Name | Product Code | | |
|---|---|---|---|
| | (1) | (2) | (3) |
| S-8211CAA-I6T1U | R | Z | A |
| S-8211CAB-I6T1U | R | Z | B |
| S-8211CAD-I6T1U | R | Z | D |
| S-8211CAE-I6T1U | R | Z | E |
| S-8211CAF-I6T1U | R | Z | F |
| S-8211CAH-I6T1U | R | Z | H |
| S-8211CAI-I6T1U | R | Z | I |
| S-8211CAJ-I6T1U | R | Z | J |
| S-8211CAK-I6T1U | R | Z | K |
| S-8211CAL-I6T1U | R | Z | L |
| S-8211CAM-I6T1U | R | Z | M |
| S-8211CAN-I6T1U | R | Z | N |
| S-8211CAO-I6T1U | R | Z | O |
| S-8211CAP-I6T1U | R | Z | P |
| S-8211CAQ-I6T1U | R | Z | Q |
| S-8211CAR-I6T1U | R | Z | R |
| S-8211CAS-I6T1U | R | Z | S |
| S-8211CAT-I6T1U | R | Z | T |
| S-8211CAU-I6T1U | R | Z | U |
| S-8211CAV-I6T1U | R | Z | V |
| S-8211CAW-I6T1U | R | Z | W |
| S-8211CAX-I6T1U | R | Z | X |
| S-8211CAY-I6T1U | R | Z | Y |
| S-8211CAZ-I6T1U | R | Z | Z |
| S-8211CBA-I6T1U | R | 7 | A |
| S-8211CBB-I6T1U | R | 7 | B |
| S-8211CBD-I6T1U | R | 7 | D |
| S-8211CBF-I6T1U | R | 7 | F |
| S-8211CBH-I6T1U | R | 7 | H |
| S-8211CBJ-I6T1U | R | 7 | J |
| S-8211CBN-I6T1U | R | 7 | N |
| S-8211CBO-I6T1U | R | 7 | O |

| Product Name | Product Code | | |
|---|---|---|---|
| | (1) | (2) | (3) |
| S-8211CBR-I6T1U | R | 7 | R |
| S-8211CBV-I6T1U | R | 7 | V |
| S-8211CBW-I6T1U | R | 7 | W |
| S-8211CBZ-I6T1U | R | 7 | Z |
| S-8211CCB-I6T1U | R | 8 | B |
| S-8211CCC-I6T1U | R | 8 | C |
| S-8211CCD-I6T1U | R | 8 | D |
| S-8211CCE-I6T1U | R | 8 | E |
| S-8211CCF-I6T1U | R | 8 | F |
| S-8211CCG-I6T1U | R | 8 | G |
| S-8211CCH-I6T1U | R | 8 | H |
| S-8211CCI-I6T1U | R | 8 | I |
| S-8211CCJ-I6T1U | R | 8 | J |
| S-8211CCM-I6T1U | R | 8 | M |
| S-8211CCN-I6T1U | R | 8 | N |
| S-8211CCS-I6T1U | R | 8 | S |
| S-8211CCU-I6T1U | R | 8 | U |
| S-8211CCW-I6T1U | R | 8 | W |
| S-8211CCX-I6T1U | R | 8 | X |
| S-8211CCY-I6T1U | R | 8 | Y |
| S-8211CCZ-I6T1U | R | 8 | Z |
| S-8211CDA-I6T1U | R | 6 | A |
| S-8211CDC-I6T1U | R | 6 | C |
| S-8211CDE-I6T1U | R | 6 | F |
| S-8211CDF-I6T1U | R | 6 | E |
| S-8211CDH-I6T1U | R | 6 | H |
| S-8211CDI-I6T1U | R | 6 | I |
| S-8211CDK-I6T1U | R | 6 | K |
| S-8211CDL-I6T1U | R | 6 | L |
| S-8211CDM-I6T1U | R | 6 | M |
| S-8211CDO-I6T1U | R | 6 | O |
| S-8211CDP-I6T1U | R | 6 | P |

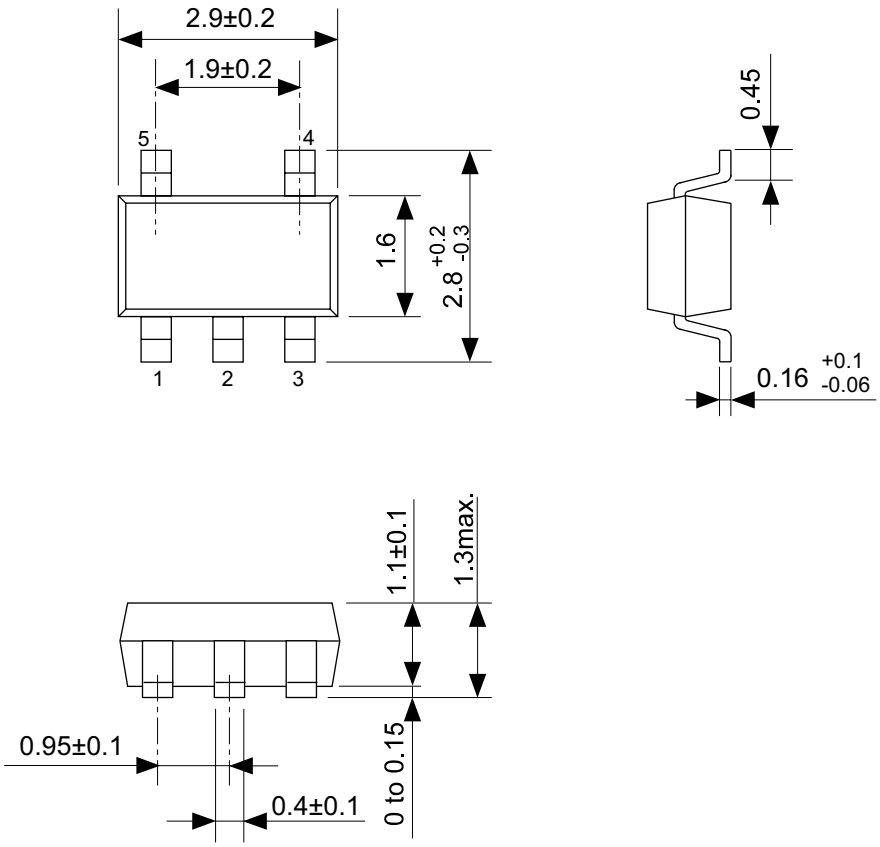


No. MP005-A-P-SD-1.3

| | |
|---|---|
| TITLE | SOT235-A-PKG Dimensions |
| No. | MP005-A-P-SD-1.3 |
| ANGLE | |
| UNIT | mm |
| | |

**ABLIC Inc.**

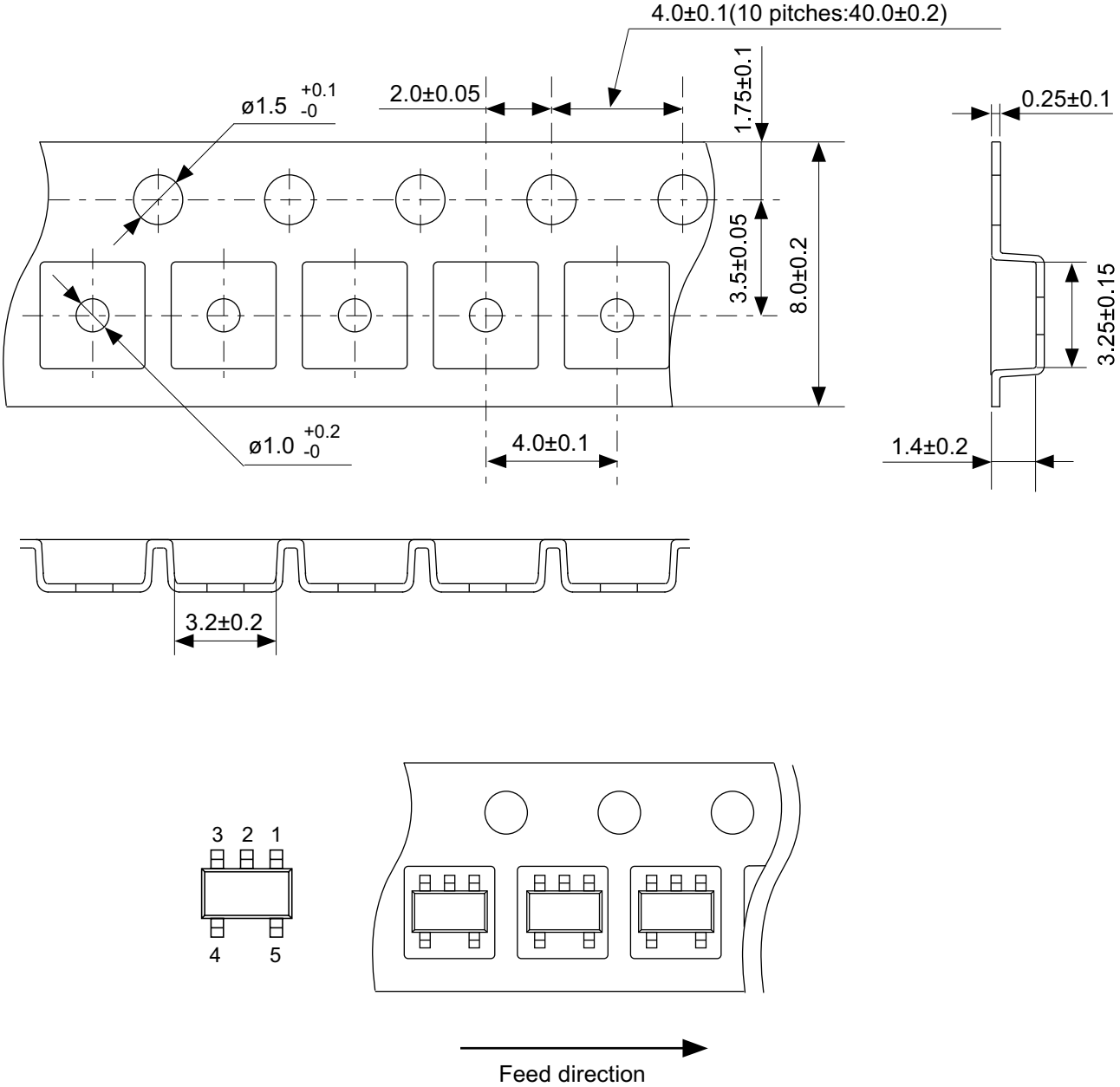


No. MP005-A-C-SD-2.1

| | |
|---|---|
| TITLE | SOT235-A-Carrier Tape |
| No. | MP005-A-C-SD-2.1 |
| ANGLE | |
| UNIT | mm |
| | |

**ABLIC Inc.**

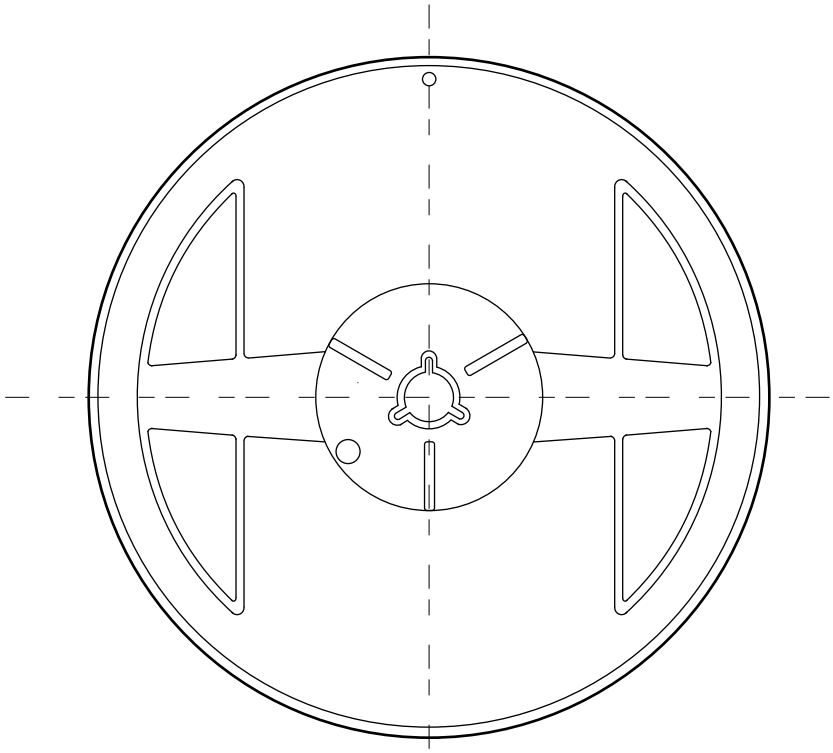

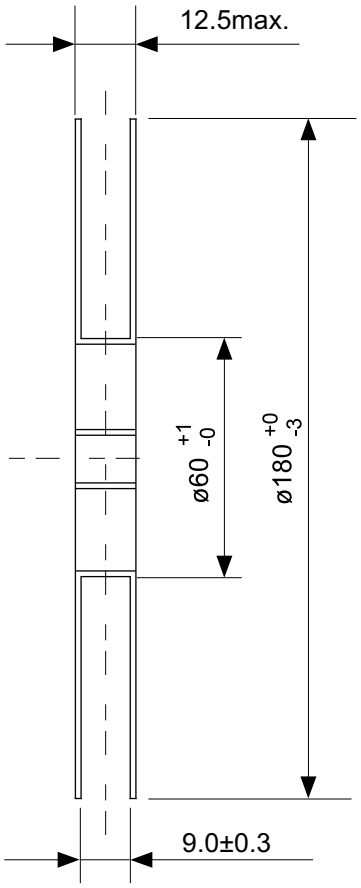


Enlarged drawing in the central part

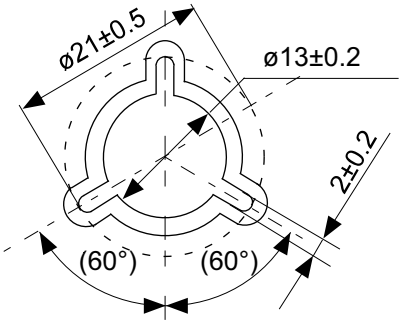


No. MP005-A-R-SD-1.1

| | | | |
|---|---|---|---|
| TITLE | SOT235-A-Reel | | |
| No. | MP005-A-R-SD-1.1 | | |
| ANGLE | | QTY. | 3,000 |
| UNIT | mm | | |
| | | | |
| ABLIC Inc. | | | |

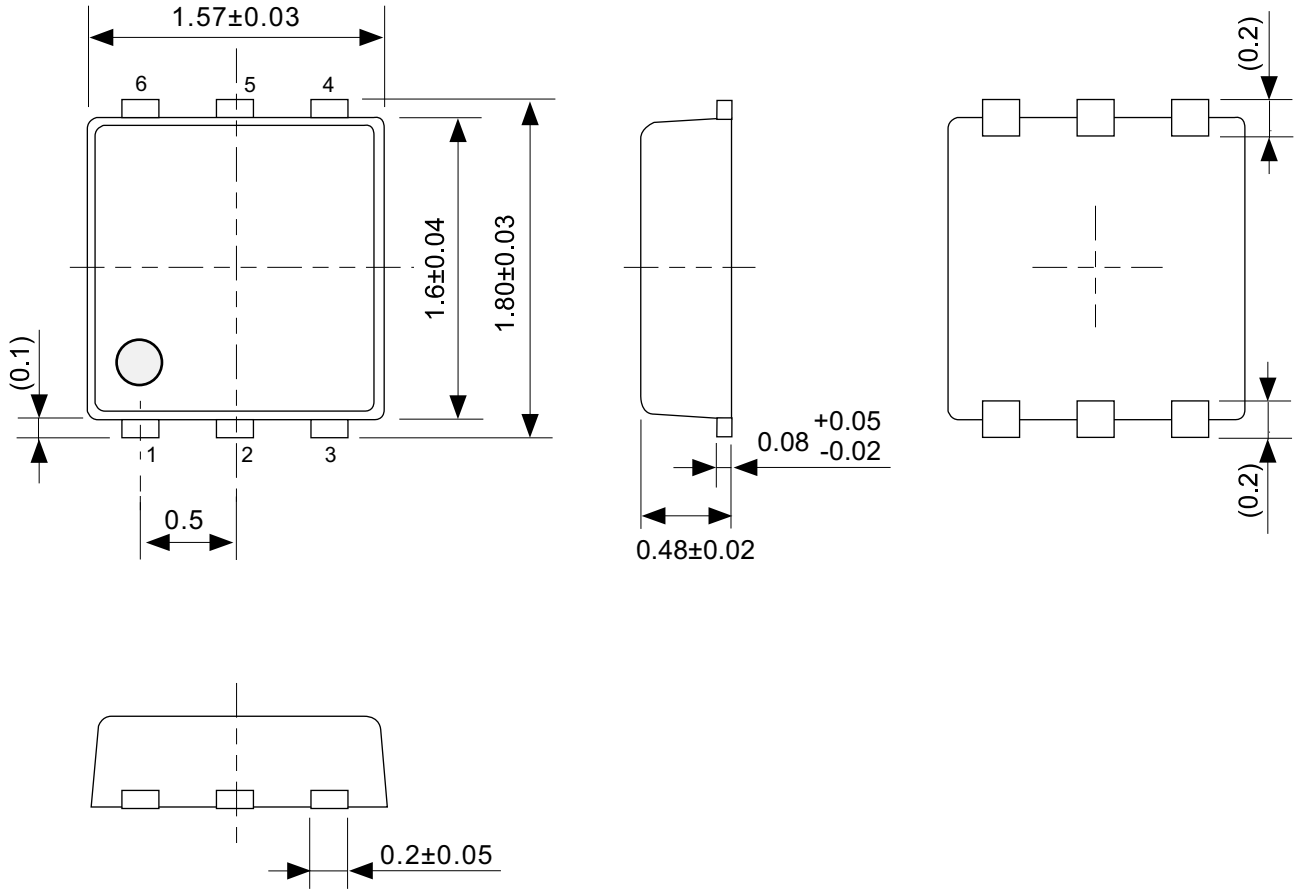


No. PG006-A-P-SD-2.1

| | |
|---|---|
| TITLE | SNT-6A-A-PKG Dimensions |
| No. | PG006-A-P-SD-2.1 |
| ANGLE | |
| UNIT | mm |
| | |

**ABLIC Inc.**

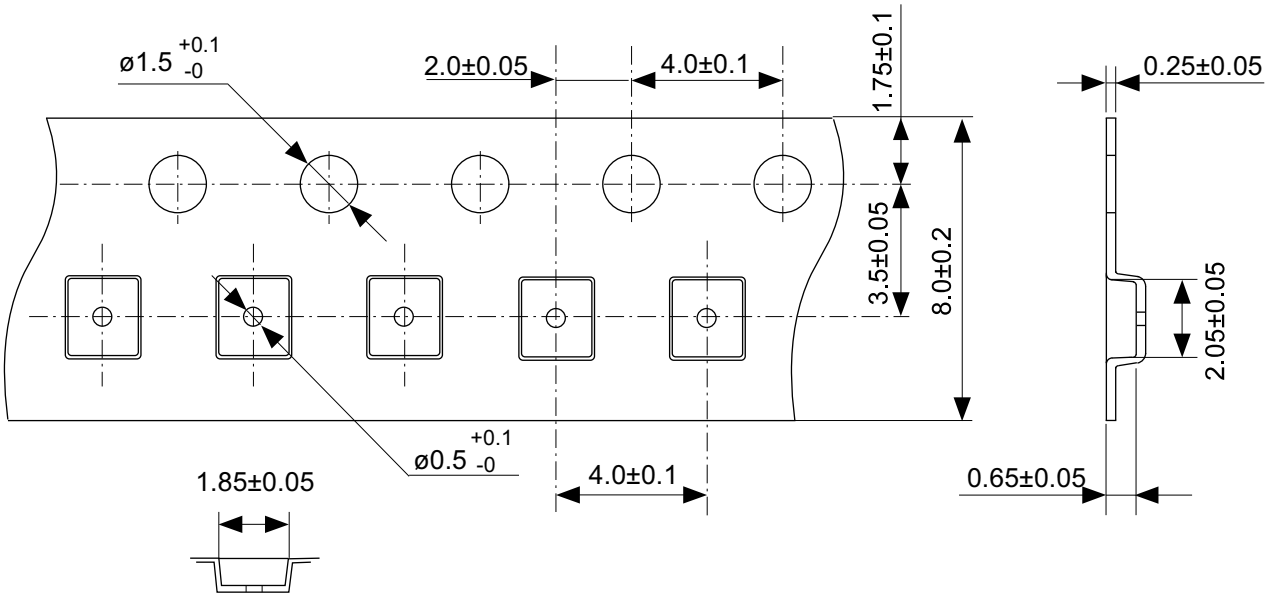


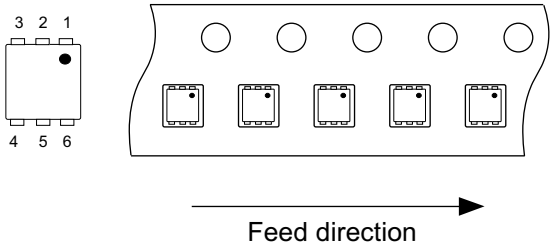


No. PG006-A-C-SD-2.0

| | |
|---|---|
| TITLE | SNT-6A-A-Carrier Tape |
| No. | PG006-A-C-SD-2.0 |
| ANGLE | |
| UNIT | mm |
| | |

**ABLIC Inc.**

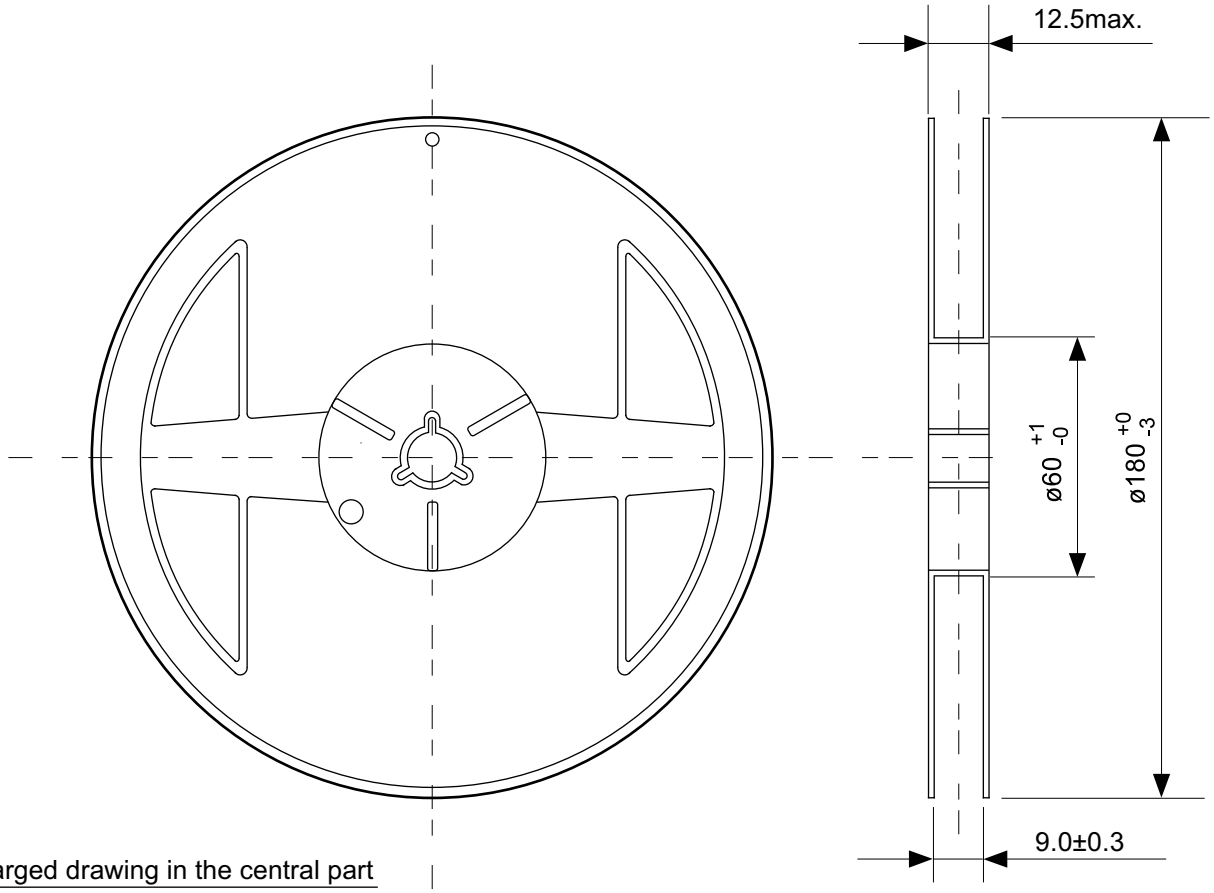


Enlarged drawing in the central part

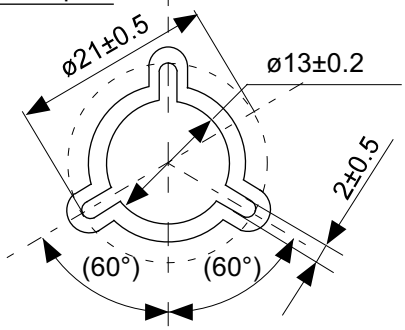


No. PG006-A-R-SD-1.0

| | | | |
|---|---|---|---|
| TITLE | SNT-6A-A-Reel | | |
| No. | PG006-A-R-SD-1.0 | | |
| ANGLE | | QTY. | 5,000 |
| UNIT | mm | | |
| | | | |
| ABLIC Inc. | | | |

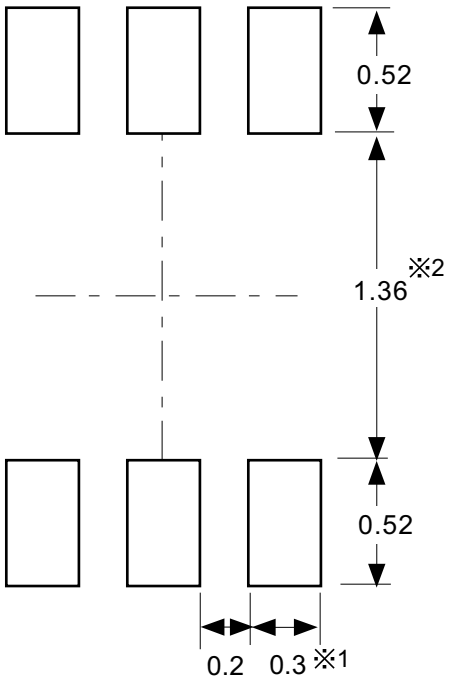


※1. ランドパターンの幅に注意してください (0.25 mm min. / 0.30 mm typ.)。
※2. パッケージ中央にランドパターンを広げないでください (1.30 mm ~ 1.40 mm)。

注意 1. パッケージのモールド樹脂下にシルク印刷やハンダ印刷などしないでください。
2. パッケージ下の配線上のソルダーレジストなどの厚みをランドパターン表面から0.03 mm 以下にしてください。
3. マスク開口サイズと開口位置はランドパターンと合わせてください。
4. 詳細は〝SNTパッケージ活用の手引き〟を参照してください。

※1. Pay attention to the land pattern width (0.25 mm min. / 0.30 mm typ.).
※2. Do not widen the land pattern to the center of the package ( 1.30 mm ~ 1.40 mm ).

**Caution 1. Do not do silkscreen printing and solder printing under the mold resin of the package.**
**2. The thickness of the solder resist on the wire pattern under the package should be 0.03 mm or less from the land pattern surface.**
**3. Match the mask aperture size and aperture position with the land pattern.**
**4. Refer to "SNT Package User's Guide" for details.**

※1. 请注意焊盘模式的宽度 (0.25 mm min. / 0.30 mm typ.)。
※2. 请勿向封装中间扩展焊盘模式 (1.30 mm ~ 1.40 mm)。

注意 1. 请勿在树脂型封装的下面印刷丝网、焊锡。
2. 在封装下、布线上的阻焊膜厚度 (从焊盘模式表面起) 请控制在 0.03 mm 以下。
3. 钢网的开口尺寸和开口位置请与焊盘模式对齐。
4. 详细内容请参阅 "SNT 封装的应用指南"。

No. PG006-A-L-SD-4.1

| | |
|---|---|
| TITLE | SNT-6A-A -Land Recommendation |
| No. | PG006-A-L-SD-4.1 |
| ANGLE | |
| UNIT | mm |
| | |
| ABLIC Inc. | |

## Disclaimers (Handling Precautions)

1. All the information described herein (product data, specifications, figures, tables, programs, algorithms and application circuit examples, etc.) is current as of publishing date of this document and is subject to change without notice.
2. The circuit examples and the usages described herein are for reference only, and do not guarantee the success of any specific mass-production design.
   ABLIC Inc. is not liable for any losses, damages, claims or demands caused by the reasons other than the products described herein (hereinafter "the products") or infringement of third-party intellectual property right and any other right due to the use of the information described herein.
3. ABLIC Inc. is not liable for any losses, damages, claims or demands caused by the incorrect information described herein.
4. Be careful to use the products within their ranges described herein. Pay special attention for use to the absolute maximum ratings, operation voltage range and electrical characteristics, etc.
   ABLIC Inc. is not liable for any losses, damages, claims or demands caused by failures and / or accidents, etc. due to the use of the products outside their specified ranges.
5. Before using the products, confirm their applications, and the laws and regulations of the region or country where they are used and verify suitability, safety and other factors for the intended use.
6. When exporting the products, comply with the Foreign Exchange and Foreign Trade Act and all other export-related laws, and follow the required procedures.
7. The products are strictly prohibited from using, providing or exporting for the purposes of the development of weapons of mass destruction or military use. ABLIC Inc. is not liable for any losses, damages, claims or demands caused by any provision or export to the person or entity who intends to develop, manufacture, use or store nuclear, biological or chemical weapons or missiles, or use any other military purposes.
8. The products are not designed to be used as part of any device or equipment that may affect the human body, human life, or assets (such as medical equipment, disaster prevention systems, security systems, combustion control systems, infrastructure control systems, vehicle equipment, traffic systems, in-vehicle equipment, aviation equipment, aerospace equipment, and nuclear-related equipment), excluding when specified for in-vehicle use or other uses by ABLIC, Inc. Do not apply the products to the above listed devices and equipments.
   ABLIC Inc. is not liable for any losses, damages, claims or demands caused by unauthorized or unspecified use of the products.
9. In general, semiconductor products may fail or malfunction with some probability. The user of the products should therefore take responsibility to give thorough consideration to safety design including redundancy, fire spread prevention measures, and malfunction prevention to prevent accidents causing injury or death, fires and social damage, etc. that may ensue from the products' failure or malfunction.
   The entire system in which the products are used must be sufficiently evaluated and judged whether the products are allowed to apply for the system on customer's own responsibility.
10. The products are not designed to be radiation-proof. The necessary radiation measures should be taken in the product design by the customer depending on the intended use.
11. The products do not affect human health under normal use. However, they contain chemical substances and heavy metals and should therefore not be put in the mouth. The fracture surfaces of wafers and chips may be sharp. Be careful when handling these with the bare hands to prevent injuries, etc.
12. When disposing of the products, comply with the laws and ordinances of the country or region where they are used.
13. The information described herein contains copyright information and know-how of ABLIC Inc. The information described herein does not convey any license under any intellectual property rights or any other rights belonging to ABLIC Inc. or a third party. Reproduction or copying of the information from this document or any part of this document described herein for the purpose of disclosing it to a third-party is strictly prohibited without the express permission of ABLIC Inc.
14. For more details on the information described herein or any other questions, please contact ABLIC Inc.'s sales representative.
15. This Disclaimers have been delivered in a text using the Japanese language, which text, despite any translations into the English language and the Chinese language, shall be controlling.

2.4-2019.07

# Mouser Electronics

Authorized Distributor

Click to View Pricing, Inventory, Delivery & Lifecycle Information:

ABLIC:

S-8211CBV-M5T1G S-8211CAA-M5T1G S-8211CAB-M5T1G S-8211CAD-M5T1G S-8211CAE-M5T1G S-8211CAF-M5T1G S-8211CAH-M5T1G S-8211CAI-M5T1G S-8211CAJ-M5T1G S-8211CAK-M5T1G S-8211CAL-M5T1G S-8211CAM-M5T1G S-8211CAN-M5T1G S-8211CAO-M5T1G S-8211CAP-M5T1G S-8211CAQ-M5T1G S-8211CAR-M5T1G S-8211CAS-M5T1G S-8211CAT-M5T1G S-8211CAU-M5T1G S-8211CAV-M5T1G S-8211CAX-I6T1G S-8211CAY-M5T1G S-8211CAZ-M5T1G S-8211CAQ-I6T1U S-8211CAP-I6T1U S-8211CAU-I6T1U S-8211CAR-I6T1U S-8211CAV-I6T1U S-8211CAT-I6T1U S-8211CBR-I6T1U S-8211CBN-I6T1U S-8211CBD-I6T1U S-8211CBB-I6T1U S-8211CBA-I6T1U S-8211CBV-I6T1U S-8211CAH-I6T1U S-8211CBW-I6T1U S-8211CAX-I6T1U S-8211CAI-I6T1U S-8211CBO-I6T1U S-8211CAJ-I6T1U S-8211CAM-I6T1U S-8211CAO-I6T1U S-8211CAZ-I6T1U S-8211CAY-I6T1U S-8211CAL-I6T1U S-8211CAN-I6T1U S-8211CAK-I6T1U S-8211CAS-I6T1U S-8211CAW-I6T1U S-8211CAD-M5T1U S-8211CAM-M5T1U S-8211CAT-M5T1U S-8211CAV-M5T1U S-8211CAZ-M5T1U S-8211CAU-M5T1U S-8211CAK-M5T1U S-8211CAI-M5T1U S-8211CAJ-M5T1U S-8211CAS-M5T1U S-8211CAN-M5T1U S-8211CAO-M5T1U S-8211CAH-M5T1U S-8211CAL-M5T1U S-8211CAR-M5T1U S-8211CAE-M5T1U S-8211CAQ-M5T1U S-8211CAA-M5T1U S-8211CAF-M5T1U S-8211CAP-M5T1U S-8211CAB-M5T1U S-8211CCZ-I6T1U S-8211CDJ-M5T1U S-8211CDS-I6T1U S-8211CCQ-M5T1U S-8211CDB-M5T1U S-8211CDD-M5T1U S-8211CCU-I6T1U S-8211CDK-I6T1U S-8211CBZ-I6T1U S-8211CDA-I6T1U S-8211CCR-M5T1U S-8211CCX-I6T1U S-8211CDH-I6T1U S-8211CDC-I6T1U S-8211CCD-M5T1U S-8211CAY-M5T1U S-8211CDR-I6T1U S-8211CCK-M5T1U S-8211CCV-M5T1U S-8211CDL-I6T1U S-8211CDE-I6T1U S-8211CCS-I6T1U S-8211CCH-I6T1U S-8211CCJ-I6T1U S-8211CBJ-I6T1U S-8211CCG-I6T1U S-8211CDG-M5T1U S-8211CBU-I6T1U

Компания «ЭлектроПласт» предлагает заключение долгосрочных отношений при поставках импортных электронных компонентов на взаимовыгодных условиях!

Наши преимущества:

- Оперативные поставки широкого спектра электронных компонентов отечественного и импортного производства напрямую от производителей и с крупнейших мировых складов;
- Поставка более 17-ти миллионов наименований электронных компонентов;
- Поставка сложных, дефицитных, либо снятых с производства позиций;
- Оперативные сроки поставки под заказ (от 5 рабочих дней);
- Экспресс доставка в любую точку России;
- Техническая поддержка проекта, помощь в подборе аналогов, поставка прототипов;
- Система менеджмента качества сертифицирована по Международному стандарту ISO 9001;
- Лицензия ФСБ на осуществление работ с использованием сведений, составляющих государственную тайну;
- Поставка специализированных компонентов (Xilinx, Altera, Analog Devices, Intersil, Interpoint, Microsemi, Aeroflex, Peregrine, Syfer, Eurofarad, Texas Instrument, Miteq, Cobham, E2V, MA-COM, Hittite, Mini-Circuits,General Dynamics и др.);

Помимо этого, одним из направлений компании «ЭлектроПласт» является направление «Источники питания». Мы предлагаем Вам помощь Конструкторского отдела:

- Подбор оптимального решения, техническое обоснование при выборе компонента;
- Подбор аналогов;
- Консультации по применению компонента;
- Поставка образцов и прототипов;
- Техническая поддержка проекта;
- Защита от снятия компонента с производства.

**Как с нами связаться**

**Телефон:** 8 (812) 309 58 32 (многоканальный)
**Факс:** 8 (812) 320-02-42
**Электронная почта:** org@eplast1.ru
**Адрес:** 198099, г. Санкт-Петербург, ул. Калинина, дом 2, корпус 4, литера А.