LVM-110 – Voltage Output, LVDT/RVDT OEM Signal Conditioner

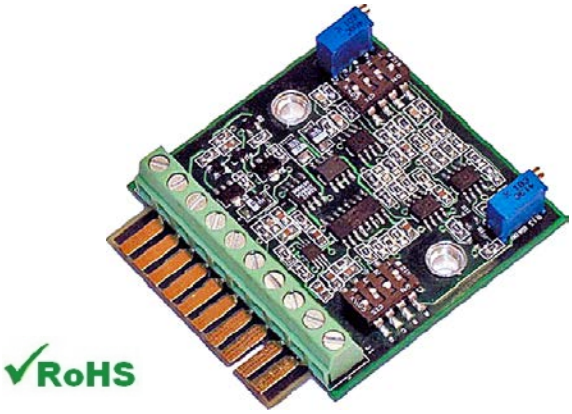

- **Low cost OEM signal conditioner**
- **Very compact, open PC board design**
- **Multiple unipolar and bipolar output options**
- **DIP switch selectable gain and excitation**
- **2.5, 5, 8 and 10kHz excitation frequencies**
- **Zero and span adjustment potentiometers**
- **Master/slave capability**
- **Card-edge or barrier strip connections**
- **Works with very low input impedance LVDTs and RVDTs**

DESCRIPTION

The **LVM-110** is a full-featured LVDT/RVDT signal conditioner that offers excellent performance on a budget. Operating on either a ±12 or ±15VDC supply voltage, the LVM-110 delivers a full range of selectable unipolar and bipolar, low noise DC voltage outputs.

Designed to be compatible with most LVDTs and RVDT transducers, the LVM-110 will operate with 5 and 6 electrical connection devices. This versatility is due to the wide variety of selectable excitation frequencies, and a generous excitation drive current of 20mA, allowing operation with transducer input impedances as low as 150 Ohms. The master/slave function (DIP switch selectable) allows synchronization of multiple conditioners to prevent beat frequencies and cross talk between transducers. The need for phase correction adjustment is eliminated thanks to demodulation synchronized to the sum of the LVDT/RVDT outputs.

The LVM-110 is designed for easy installation, plugged into a backplane-type connector, or with individual wires connected to the screw terminal barrier strip. Measuring less than 2.5x2.5 inches, it can be mounted or stacked using the permanently attached threaded standoffs, or card-edge guides. All selectable operating parameters are easily accessed via two DIP switches, simplifying the gain, frequency and output setup procedure.

Also see our other LVDT/RVDT signal conditioner models:

LiM-420	24VDC supply, 4-20mA (3-wire) output, open circuit board
LDM-1000	10 to 30VDC supply, DC voltage and 4 to 20mA outputs, DIN rail mountable
ATA-2001	Line powered, DC voltage and current outputs, push-button programmable
IEM-422	Line powered, 4-20mA output, NEMA-13 rated enclosure
PML-1000	AC or DC supply, DC voltage, current and RS485 outputs, 1/8th DIN panel meter,
MP-2000	Line-powered, analog DC & RS232 outputs, ¼ DIN, dual channel set point controller with bit-mapped display

Measurement Specialties, Inc. (NASDAQ MEAS) offers many other types of sensors and signal conditioners. Data sheets can be downloaded from our web site at: http://www.meas-spec.com/datasheets.aspx

*MEAS acquired Schaevitz Sensors and the **Schaevitz**® trademark in 2000.*

FEATURES

- Low cost/high performance
- 3-pole Butterworth filter
- DIP switch selectable gain, output and LVDT excitation frequency
- 20-turn zero suppression & span potentiometers

APPLICATIONS

- Position feedback systems
- High density dimensional gaging
- Space restrictive installations
- Testing systems
- Integration into OEM machines

LVM-110 – Voltage Output, LVDT/RVDT OEM Signal Conditioner

PERFORMANCE SPECIFICATIONS

ELECTRICAL SPECIFICATIONS	
Supply voltage	±12VDC or ±15VDC, ±10% *(Note; ±15VDC required for ±10VDC output)*
Supply current	±50mA maximum
Output voltage ranges	±5VDC, ±10VDC, 0 to +5VDC, 0 to +10VDC *(DIP switch selectable)*
Temperature coefficient of output	±0.02% of FSO per ºF [±0.036% of FSO per ºC] over operating temperature range
Output current	5mA maximum
Output noise and ripple	15mV RMS maximum
Output impedance	1Ω maximum
Frequency response	250Hz @ -3 dB (3-pole Butterworth filter)
Non-linearity	±0.05% of FSO maximum
Stability	±0.05% of FSO maximum (after 15 minute warm-up)
Zero suppression	±6VDC total
Transducer excitation	
Voltage	3VRMS ±10%, sine wave
Current	20mA RMS maximum
Frequency	2.5, 5, 8 or 10KHz *(DIP switch selectable)*
Transducer requirements	
Transducer type	LVDT or RVDT with 5 or 6 electrical connections
LVDT/RVDT input impedance	150Ω minimum
LVDT/RVDT output range	0.1 to 5.6 VRMS for ±10VDC signal conditioner output

ENVIRONMENTAL AND MECHANICAL SPECIFICATIONS	
Operating temperature range	30°F to +130°F [-1°C to 55°C]
Storage temperature range	-40°F to +257°F [-40°C to 125°C]
Zero and gain adjustments	20-turn potentiometers
Electrical connections	PC board edge (to backplane-type connector) or barrier terminal strip (accepts AWG 14 to 30 wire sizes)
Mounting	Use the attached threaded standoffs or card-edge guides

Notes:
All values are nominal unless otherwise noted
FSO (Full Scale Output) is the largest absolute value of the outputs measured at the range ends

WIRING SCHEMATIC

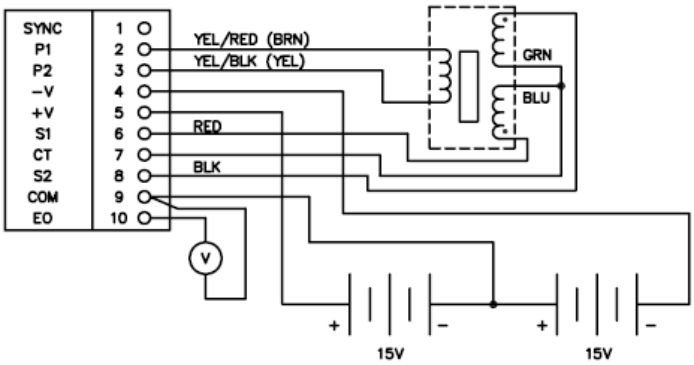

LVM-110 – Voltage Output, LVDT/RVDT OEM Signal Conditioner

DIMENSIONS

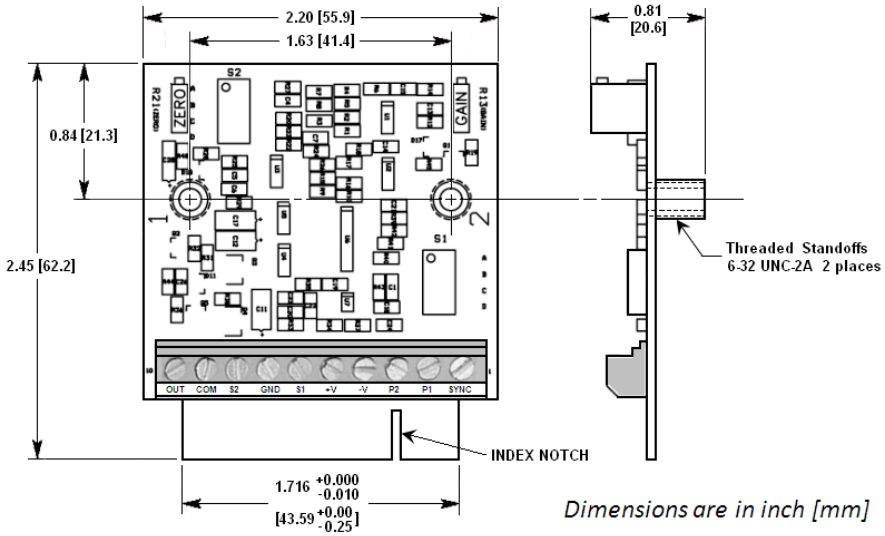

ORDERING INFORMATION

Description	Model	Part Number
LVDT/RVDT Voltage Output, OEM Signal Conditioner	LVM-110	04171776-000
Dual rail DC power supply (±15VDC)	PSD 40-15	02291339-000
Mating Connector *(sold separately)*	CINCH 5010A-20 PCB EDGE 1	62105012-000
Cable to connect HCA/HCI/GCA/R36AS to LVM-110 *(1)*	PTO6A-10-6S to Stripped & Tinned	04290417-000
Extension cable to connect LBB (option -001) to LVM-110 *(1)*	PTO6A-10-6S to Stripped & Tinned	04290582-000

(1) All cables are shielded, 10 foot long, and rated 80°C [176°F]. Consult factory for other lengths.

Download the operation manual at: http://www.meas-spec.com/manuals.aspx

TECHNICAL CONTACT INFORMATION

NORTH AMERICA	EUROPE	ASIA
Measurement Specialties, Inc. 1000 Lucas Way Hampton, VA 23666 United States Phone: +1-800-745-8008 Fax: +1-757-766-4297 Email: sales@meas-spec.com Web: www.meas-spec.com	MEAS Deutschland GmbH Hauert 13 D-44227 Dortmund Germany Phone: +49-(0)231-9740-0 Fax: +49-(0)231-9740-20 Email: info.de@meas-spec.com Web: www.meas-spec.com	Measurement Specialties China Ltd. No. 26, Langshan Road High-tech Park (North) Nanshan District, Shenzhen 518057 China Phone: +86-755-33305088 Fax: +86-755-33305099 Email: info.cn@meas-spec.com Web: www.meas-spec.com

The information in this sheet has been carefully reviewed and is believed to be accurate; however, no responsibility is assumed for inaccuracies. Furthermore, this information does not convey to the purchaser of such devices any license under the patent rights to the manufacturer. Measurement Specialties, Inc. reserves the right to make changes without further notice to any product herein. Measurement Specialties, Inc. makes no warranty, representation or guarantee regarding the suitability of its product for any particular purpose, nor does Measurement Specialties, Inc. assume any liability arising out of the application or use of any product or circuit and specifically disclaims any and all liability, including without limitation consequential or incidental damages. Typical parameters can and do vary in different applications. All operating parameters must be validated for each customer application by customer's technical experts. Measurement Specialties, Inc. does not convey any license under its patent rights nor the rights of others.

Компания «ЭлектроПласт» предлагает заключение долгосрочных отношений при поставках импортных электронных компонентов на взаимовыгодных условиях!

Наши преимущества:

- Оперативные поставки широкого спектра электронных компонентов отечественного и импортного производства напрямую от производителей и с крупнейших мировых складов;
- Поставка более 17-ти миллионов наименований электронных компонентов;
- Поставка сложных, дефицитных, либо снятых с производства позиций;
- Оперативные сроки поставки под заказ (от 5 рабочих дней);
- Экспресс доставка в любую точку России;
- Техническая поддержка проекта, помощь в подборе аналогов, поставка прототипов;
- Система менеджмента качества сертифицирована по Международному стандарту ISO 9001;
- Лицензия ФСБ на осуществление работ с использованием сведений, составляющих государственную тайну;
- Поставка специализированных компонентов (Xilinx, Altera, Analog Devices, Intersil, Interpoint, Microsemi, Aeroflex, Peregrine, Syfer, Eurofarad, Texas Instrument, Miteq, Cobham, E2V, MA-COM, Hittite, Mini-Circuits,General Dynamics и др.);

Помимо этого, одним из направлений компании «ЭлектроПласт» является направление «Источники питания». Мы предлагаем Вам помощь Конструкторского отдела:

- Подбор оптимального решения, техническое обоснование при выборе компонента;
- Подбор аналогов;
- Консультации по применению компонента;
- Поставка образцов и прототипов;
- Техническая поддержка проекта;
- Защита от снятия компонента с производства.

Как с нами связаться

Телефон: 8 (812) 309 58 32 (многоканальный)
Факс: 8 (812) 320-02-42
Электронная почта: org@eplast1.ru
Адрес: 198099, г. Санкт-Петербург, ул. Калинина, дом 2, корпус 4, литера А.