DS1822-PAR
Econo 1-Wire Parasite-Power Digital Thermometer

www.maxim-ic.com

FEATURES

- Unique 1-Wire® interface requires only one port pin for communication
- Derives power from data line ("parasite power")—does not need a local power supply
- Multidrop capability simplifies distributed temperature sensing applications
- Requires no external components
- ±2.0°C accuracy from -10°C to +85°C
- Measures temperatures from -55°C to +100°C (-67°F to +212°F)
- Thermometer resolution is user-selectable from 9 to 12 bits
- Converts temperature to 12-bit digital word in 750ms (max.)
- User-definable temperature alarm settings
- Alarm search command identifies and addresses devices whose temperature is outside of programmed limits (temperature alarm condition)
- Software compatible with the DS18B20-PAR
- Ideal for use in remote sensing applications (e.g., temperature probes) that do not have a local power source

PIN ASSIGNMENT

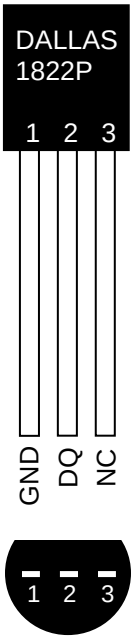

(BOTTOM VIEW)

TO-92
(DS1822-PAR)

PIN DESCRIPTION

GND - Ground
DQ - Data In/Out
NC - No Connect

DESCRIPTION

The DS1822-PAR digital thermometer provides 9- to 12-bit centigrade temperature measurements and has an alarm function with nonvolatile (NV) user-programmable upper and lower trigger points. The DS1822-PAR does not need an external power supply because it derives power directly from the data line ("parasite power"). The DS1822-PAR communicates over a 1-Wire bus, which by definition requires only one data line (and ground) for communication with a central microprocessor. It has an operating temperature range of -55°C to +100°C and is accurate to ±2.0°C over a range of -10°C to +85°C.

Each DS1822-PAR has a unique 64-bit identification code, which allows multiple DS1822-PARs to function on the same 1-Wire bus; thus, it is simple to use one microprocessor to control many DS1822-PARs distributed over a large area. Applications that can benefit from this feature include HVAC environmental controls, temperature monitoring systems inside buildings, equipment or machinery, and process monitoring and control systems.

1-Wire is a registered trademark of Dallas Semiconductor.

DETAILED PIN DESCRIPTIONS Table 1

PIN	SYMBOL	DESCRIPTION
1	GND	**Ground.**
2	DQ	**Data Input/Output pin.** Open-drain 1-Wire interface pin. Also provides power to the device when used in parasite power mode (see "Parasite Power" section.)
3	NC	**No Connect.** Doesn't connect to internal circuit.

OVERVIEW

The DS1822-PAR uses Dallas' exclusive 1-Wire bus protocol that implements bus communication using one control signal. The control line requires a weak pullup resistor since all devices are linked to the bus via a 3-state or open-drain port (the DQ pin in the case of the DS1822-PAR). In this bus system, the microprocessor (the master device) identifies and addresses devices on the bus using each device's unique 64-bit code. Because each device has a unique code, the number of devices that can be addressed on one bus is virtually unlimited. The 1-Wire bus protocol, including detailed explanations of the commands and "time slots," is covered in the 1-WIRE BUS SYSTEM section of this data sheet.

An important feature of the DS1822-PAR is its ability to operate without an external power supply. Power is instead supplied through the 1-Wire pullup resistor via the DQ pin when the bus is high. The high bus signal also charges an internal capacitor (C_{PP}), which then supplies power to the device when the bus is low. This method of deriving power from the 1-Wire bus is referred to as "parasite power."

Figure 1 shows a block diagram of the DS1822-PAR, and pin descriptions are given in Table 1. The 64-bit ROM stores the device's unique serial code. The scratchpad memory contains the 2-byte temperature register that stores the digital output from the temperature sensor. In addition, the scratchpad provides access to the 1-byte upper and lower alarm trigger registers (T_H and T_L). The T_H and T_L registers are NV (EEPROM), so they will retain their data when the device is powered down.

DS1822-PAR BLOCK DIAGRAM Figure 1

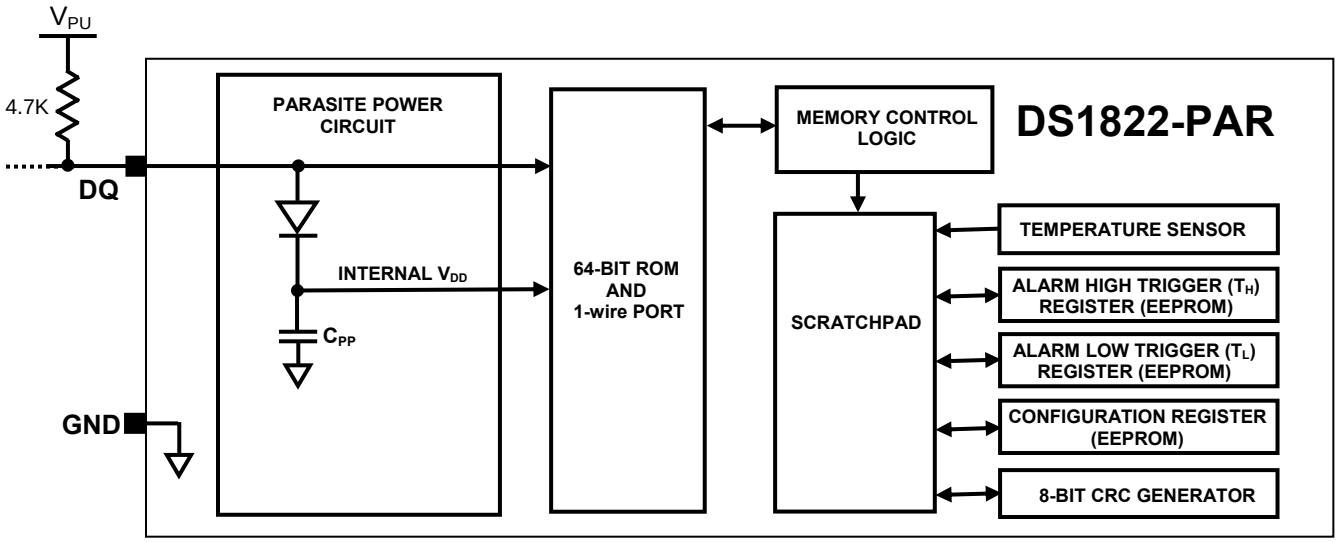

PARASITE POWER

The DS1822-PAR's parasite power circuit allows the DS1822-PAR to operate without a local external power supply. This ability is especially useful for applications that require remote temperature sensing or that are very space constrained. Figure 1 shows the DS1822-PAR's parasite-power control circuitry, which "steals" power from the 1-Wire bus via the DQ pin when the bus is high. The stolen charge powers the DS1822-PAR while the bus is high, and some of the charge is stored on the parasite power capacitor (C_{PP}) to provide power when the bus is low.

The 1-Wire bus and C_{PP} can provide sufficient parasite power to the DS1822-PAR for most operations as long as the specified timing and voltage requirements are met (refer to the DC ELECTRICAL CHARACTERISTICS and the AC ELECTRICAL CHARACTERISTICS sections of this data sheet). However, when the DS1822-PAR is performing temperature conversions or copying data from the scratchpad memory to EEPROM, the operating current can be as high as 1.5mA. This current can cause an unacceptable voltage drop across the weak 1-Wire pullup resistor and is more current than can be supplied by C_{PP}. To assure that the DS1822-PAR has sufficient supply current, it is necessary to provide a strong pullup on the 1-Wire bus whenever temperature conversions are taking place or data is being copied from the scratchpad to EEPROM. This can be accomplished by using a MOSFET to pull the bus directly to the rail as shown in Figure 2. The 1-Wire bus must be switched to the strong pullup within 10µs (max) after a Convert T [44h] or Copy Scratchpad [48h] command is issued, and the bus must be held high by the pullup for the duration of the conversion (t_{conv}) or data transfer (t_{wr} = 10ms). No other activity can take place on the 1-Wire bus while the pullup is enabled.

SUPPLYING THE DS1822-PAR DURING TEMPERATURE CONVERSIONS

Figure 2

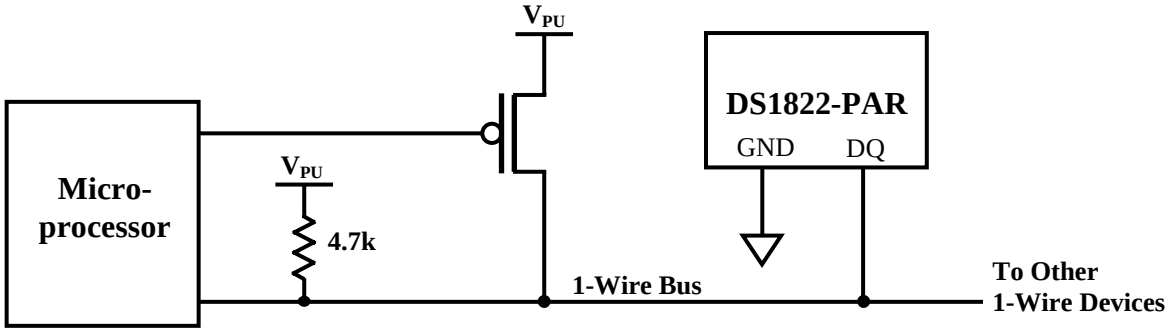

OPERATION—MEASURING TEMPERATURE

The core functionality of the DS1822-PAR is its direct-to-digital temperature sensor. The resolution of the temperature sensor is user-configurable to 9, 10, 11, or 12 bits, which corresponds to increments of 0.5°C, 0.25°C, 0.125°C, and 0.0625°C, respectively. The default resolution at power-up is 12-bit.

The DS1822-PAR powers-up in a low-power idle state; to initiate a temperature measurement and A-to-D conversion, the master must issue a Convert T [44h] command. Following the conversion, the resulting thermal data is stored in the 2-byte temperature register in the scratchpad memory and the DS1822-PAR returns to its idle state. The DS1822-PAR output data is calibrated in degrees centigrade; for Fahrenheit applications, a lookup table or conversion routine must be used. The temperature data is stored as a 16-bit sign-extended two's complement number in the temperature register (see Figure 3). The sign bits (S) indicate if the temperature is positive or negative: for positive numbers S = 0 and for negative numbers S = 1. If the DS1822-PAR is configured for 12-bit resolution, all bits in the temperature register will contain valid data. For 11-bit resolution, bit 0 is undefined. For 10-bit resolution, bits 1 and 0 are undefined, and for 9-bit resolution bits 2, 1 and 0 are undefined. Table 2 gives examples of digital output data and the corresponding temperature reading for 12-bit resolution conversions.

TEMPERATURE REGISTER FORMAT Figure 3

	bit 7	bit 6	bit 5	bit 4	bit 3	bit 2	bit 1	bit 0
LS Byte	2^3	2^2	2^1	2^0	2^{-1}	2^{-2}	2^{-3}	2^{-4}
	bit 15	bit 14	bit 13	bit 12	bit 11	bit 10	bit 9	bit 8
MS Byte	S	S	S	S	S	2^6	2^5	2^4

TEMPERATURE/DATA RELATIONSHIP Table 2

TEMPERATURE	DIGITAL OUTPUT (Binary)	DIGITAL OUTPUT (Hex)
+85°C*	0000 0101 0101 0000	0550h
+25.0625°C	0000 0001 1001 0001	0191h
+10.125°C	0000 0000 1010 0010	00A2h
+0.5°C	0000 0000 0000 1000	0008h
0°C	0000 0000 0000 0000	0000h
-0.5°C	1111 1111 1111 1000	FFF8h
-10.125°C	1111 1111 0101 1110	FF5Eh
-25.0625°C	1111 1110 0110 1111	FE6Fh
-55°C	1111 1100 1001 0000	FC90h

*The power-on reset value of the temperature register is +85°C

OPERATION—ALARM SIGNALING

After the DS1822-PAR performs a temperature conversion, the temperature value is compared to the user-defined two's complement alarm trigger values stored in the 1-byte T_H and T_L registers (see Figure 4). The sign bit (S) indicates if the value is positive or negative: for positive numbers S = 0 and for negative numbers S = 1. The T_H and T_L registers are NV (EEPROM) so they will retain data when the device is powered down. T_H and T_L can be accessed through bytes 2 and 3 of the scratchpad as explained in the MEMORY section of this data sheet.

T_H AND T_L REGISTER FORMAT Figure 4

bit 7	bit 6	bit 5	bit 4	bit 3	bit 2	bit 1	bit 0
S	2^6	2^5	2^5	2^5	2^2	2^1	2^0

Only bits 11 through 4 of the temperature register are used in the T_H and T_L comparison since T_H and T_L are 8-bit registers. If the measured temperature is lower than or equal to T_L or higher than or equal to T_H, an alarm condition exists and an alarm flag is set inside the DS1822-PAR. This flag is updated after every temperature measurement; therefore, if the alarm condition goes away, the flag will be turned off after the next temperature conversion.

The master device can check the alarm flag status of all DS1822-PARs on the bus by issuing an Alarm Search [ECh] command. Any DS1822-PARs with a set alarm flag will respond to the command, so the master can determine exactly which DS1822-PARs have experienced an alarm condition. If an alarm condition exists and the T_H or T_L settings have changed, another temperature conversion should be done to validate the alarm condition.

64-BIT LASERED ROM CODE

Each DS1822-PAR contains a unique 64-bit code (see Figure 5) stored in ROM. The least significant eight bits of the ROM code contain the DS1822-PAR's 1-Wire family code: 22h. The next 48 bits contain a unique serial number. The most significant eight bits contain a cyclic redundancy check (CRC) byte that is calculated from the first 56 bits of the ROM code. A detailed explanation of the CRC bits is provided in the CRC GENERATION section. The 64-bit ROM code and associated ROM function control logic allow the DS1822-PAR to operate as a 1-Wire device using the protocol detailed in the 1-WIRE BUS SYSTEM section of this data sheet.

64-BIT LASERED ROM CODE Figure 5

8-BIT CRC	48-BIT SERIAL NUMBER	8-BIT FAMILY CODE (22h)
MSB LSB	MSB LSB	MSB LSB

MEMORY

The DS1822-PAR's memory is organized as shown in Figure 6. The memory consists of an SRAM scratchpad with NV EEPROM storage for the high and low alarm trigger registers (T_H and T_L) and configuration register. Note that if the DS1822-PAR alarm function is not used, the T_H and T_L registers can serve as general-purpose memory. All memory commands are described in detail in the DS1822-PAR FUNCTION COMMANDS section.

DS1822-PAR MEMORY MAP Figure 6

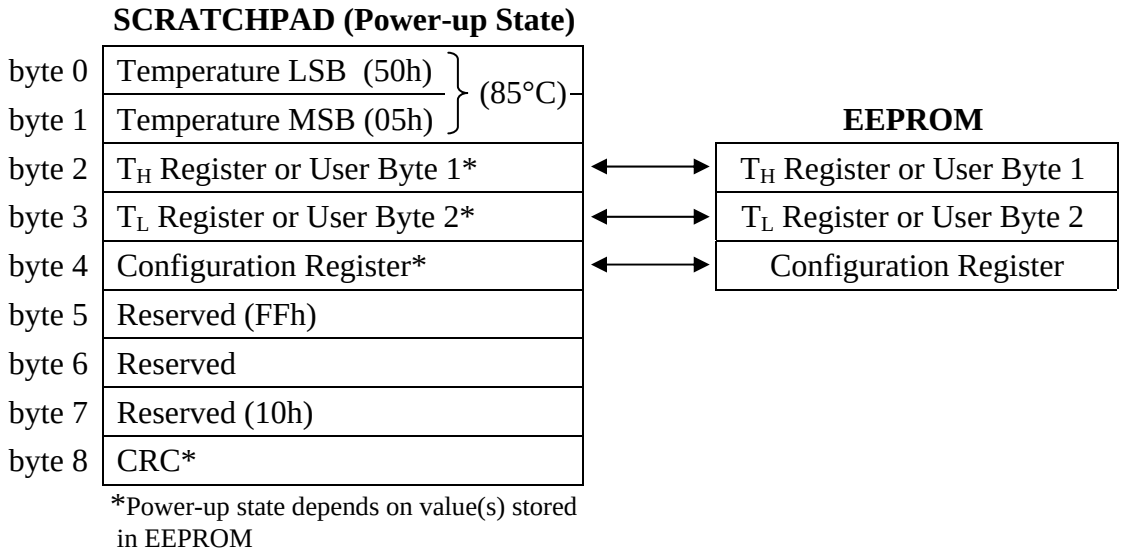

Byte 0 and byte 1 of the scratchpad contain the LSB and the MSB of the temperature register, respectively. These bytes are read-only. Bytes 2 and 3 provide access to T_H and T_L registers. Byte 4 contains the configuration register data, which is explained in detail in the CONFIGURATION REGISTER section of this data sheet. Bytes 5, 6 and 7 are reserved for internal use by the device and cannot be overwritten.

Byte 8 of the scratchpad is read-only and contains the cyclic redundancy check (CRC) code for bytes 0 through 7 of the scratchpad. The DS1822-PAR generates this CRC using the method described in the CRC GENERATION section.

Data is written to bytes 2, 3, and 4 of the scratchpad using the Write Scratchpad [4Eh] command, and the data must be transmitted to the DS1822-PAR starting with the least significant bit of byte 2. To verify data integrity, the scratchpad can be read (using the Read Scratchpad [BEh] command) after the data is written. When reading the scratchpad, data is transferred over the 1-Wire bus starting with the least significant bit of byte 0. To transfer the T_H, T_L and configuration data from the scratchpad to EEPROM, the master must issue the Copy Scratchpad [48h] command.

Data in the EEPROM registers is retained when the device is powered down; at power-up the EEPROM data is reloaded into the corresponding scratchpad locations. Data can also be reloaded from EEPROM to the scratchpad at any time using the Recall E^2 [B8h] command. The master can issue "read-time slots" (see the 1-WIRE BUS SYSTEM section) following the Recall E^2 command and the DS1822-PAR will indicate the status of the recall by transmitting 0 while the recall is in progress and 1 when the recall is done.

CONFIGURATION REGISTER

Byte 4 of the scratchpad memory contains the configuration register, which is organized as illustrated in Figure 7. The user can set the conversion resolution of the DS1822-PAR using the R0 and R1 bits in this register as shown in Table 3. The power-up default of these bits is R0 = 1 and R1 = 1 (12-bit resolution). Note that there is a direct tradeoff between resolution and conversion time. Bit 7 and bits 0-4 in the configuration register are reserved for internal use by the device and cannot be overwritten.

CONFIGURATION REGISTER Figure 7

bit 7	bit 6	bit 5	bit 4	bit 3	bit 2	bit 1	bit 0
0	R1	R0	1	1	1	1	1

THERMOMETER RESOLUTION CONFIGURATION Table 3

R1	R0	Resolution	Max Conversion Time	
0	0	9-bit	93.75 ms	(t_{CONV}/8)
0	1	10-bit	187.5 ms	(t_{CONV}/4)
1	0	11-bit	375 ms	(t_{CONV}/2)
1	1	12-bit	750 ms	(t_{CONV})

CRC GENERATION

CRC bytes are provided as part of the DS1822-PAR's 64-bit ROM code and in the 9th byte of the scratchpad memory. The ROM code CRC is calculated from the first 56 bits of the ROM code and is contained in the most significant byte of the ROM. The scratchpad CRC is calculated from the data stored in the scratchpad, and therefore it changes when the data in the scratchpad changes. The CRCs provide the bus master with a method of data validation when data is read from the DS1822-PAR. To verify that data has been read correctly, the bus master must recalculate the CRC from the received data and then compare this value to either the ROM code CRC (for ROM reads) or to the scratchpad CRC (for scratchpad reads). If the calculated CRC matches the read CRC, the data has been received error free. The comparison of CRC values and the decision to continue with an operation are determined entirely by the bus master. There is no circuitry inside the DS1822-PAR that prevents a command sequence from

proceeding if the DS1822-PAR CRC (ROM or scratchpad) does not match the value generated by the bus master.

The equivalent polynomial function of the CRC (ROM or scratchpad) is: $CRC = X^8 + X^5 + X^4 + 1$

The bus master can recalculate the CRC and compare it to the CRC values from the DS1822-PAR using the polynomial generator shown in Figure 8. This circuit consists of a shift register and XOR gates, and the shift register bits are initialized to 0. Starting with the least significant bit of the ROM code or the least significant bit of byte 0 in the scratchpad, one bit at a time should shifted into the shift register. After shifting in the 56th bit from the ROM or the most significant bit of byte 7 from the scratchpad, the polynomial generator will contain the re-calculated CRC. Next, the 8-bit ROM code or scratchpad CRC from the DS1822-PAR must be shifted into the circuit. At this point, if the re-calculated CRC was correct, the shift register will contain all 0s. Additional information about the Dallas 1-Wire cyclic redundancy check is available in Application Note 27 entitled *Understanding and Using Cyclic Redundancy Checks with Dallas Semiconductor Touch Memory Products*.

CRC GENERATOR Figure 8

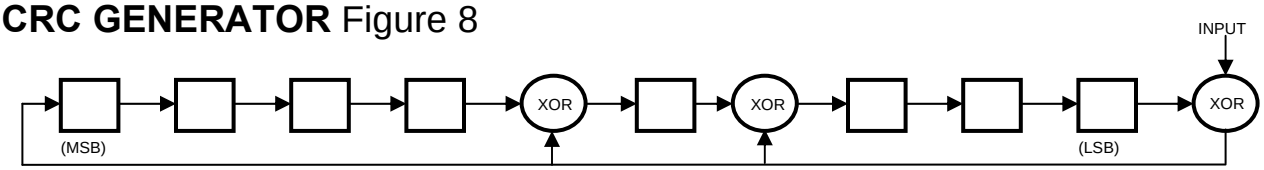

1-WIRE BUS SYSTEM

The 1-Wire bus system uses a single bus master to control one or more slave devices. The DS1822-PAR is always a slave. When there is only one slave on the bus, the system is referred to as a “single-drop” system; the system is “multidrop” if there are multiple slaves on the bus.
All data and commands are transmitted least significant bit first over the 1-Wire bus.

The following discussion of the 1-Wire bus system is broken down into three topics: hardware configuration, transaction sequence, and 1-Wire signaling (signal types and timing).

HARDWARE CONFIGURATION

The 1-Wire bus has by definition only a single data line. Each device (master or slave) interfaces to the data line via an open drain or 3-state port. This allows each device to “release” the data line when the device is not transmitting data so the bus is available for use by another device. The 1-Wire port of the DS1822-PAR (the DQ pin) is open drain with an internal circuit equivalent to that shown in Figure 9.

The 1-Wire bus requires an external pullup resistor of approximately 5 kΩ; thus, the idle state for the 1-Wire bus is high. If for any reason a transaction needs to be suspended, the bus must be left in the idle state if the transaction is to resume. Infinite recovery time can occur between bits so long as the 1-Wire bus is in the inactive (high) state during the recovery period. If the bus is held low for more than 480µs, all components on the bus will be reset. In addition, to assure that the DS1822-PAR has sufficient supply current during temperature conversions, it is necessary to provide a strong pullup (such as a MOSFET) on the 1-Wire bus whenever temperature conversions are taking place (as described in the PARASITE POWER section).

HARDWARE CONFIGURATION Figure 9

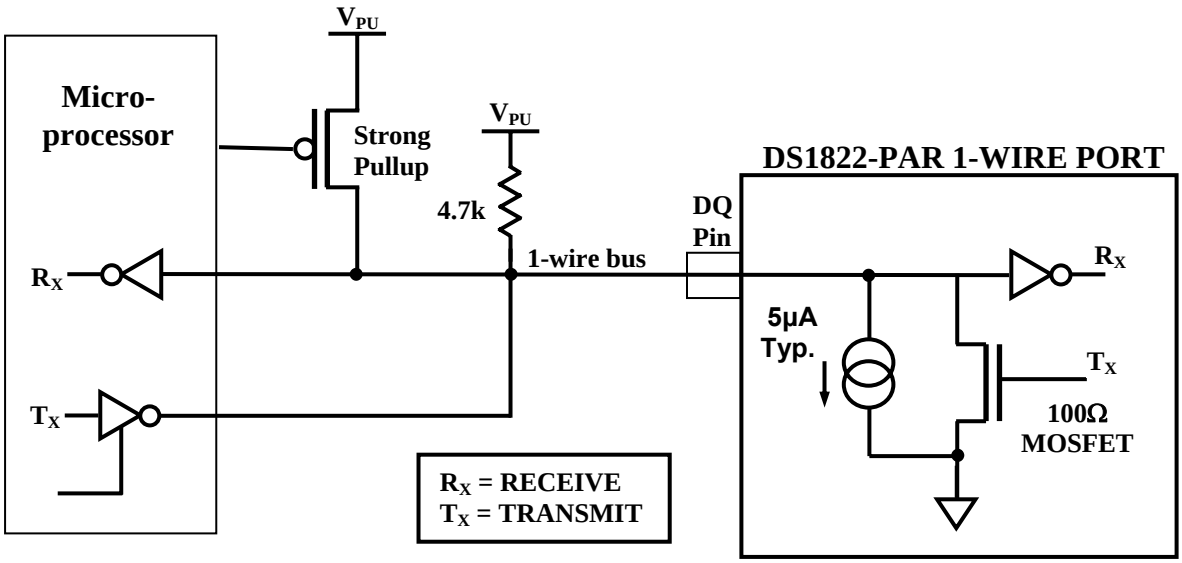

TRANSACTION SEQUENCE

The transaction sequence for accessing the DS1822-PAR is as follows:

Step 1. Initialization

Step 2. ROM Command (followed by any required data exchange)

Step 3. DS1822-PAR Function Command (followed by any required data exchange)

It is very important to follow this sequence every time the DS1822-PAR is accessed, as the DS1822-PAR will not respond if any steps in the sequence are missing or out of order. Exceptions to this rule are the Search ROM [F0h] and Alarm Search [ECh] commands. After issuing either of these ROM commands, the master must return to Step 1 in the sequence.

INITIALIZATION

All transactions on the 1-Wire bus begin with an initialization sequence. The initialization sequence consists of a reset pulse transmitted by the bus master followed by presence pulse(s) transmitted by the slave(s). The presence pulse lets the bus master know that slave devices (such as the DS1822-PAR) are on the bus and are ready to operate. Timing for the reset and presence pulses is detailed in the 1-WIRE SIGNALING section.

ROM COMMANDS

After the bus master has detected a presence pulse, it can issue a ROM command. These commands operate on the unique 64-bit ROM codes of each slave device and allow the master to single out a specific device if many are present on the 1-Wire bus. These commands also allow the master to determine how many and what types of devices are present on the bus or if any device has experienced an alarm condition. There are five ROM commands, and each command is eight bits long. The master device must issue an appropriate ROM command before issuing a DS1822-PAR function command. A flowchart for operation of the ROM commands is shown in Figure 10.

SEARCH ROM [F0h]

When a system is initially powered up, the master must identify the ROM codes of all slave devices on the bus, which allows the master to determine the number of slaves and their device types. The master

learns the ROM codes through a process of elimination that requires the master to perform a Search ROM cycle (i.e., Search ROM command followed by data exchange) as many times as necessary to identify all of the slave devices. If there is only one slave on the bus, the simpler Read ROM command (see below) can be used in place of the Search ROM process. For a detailed explanation of the Search ROM procedure, refer to the iButton® Book of Standards at www.ibutton.com/ibuttons/standard.pdf. After every Search ROM cycle, the bus master must return to Step 1 (Initialization) in the transaction sequence.

READ ROM [33h]

This command can only be used when there is one slave on the bus. It allows the bus master to read the slave's 64-bit ROM code without using the Search ROM procedure. If this command is used when there is more than one slave present on the bus, a data collision will occur when all the slaves attempt to respond at the same time.

MATCH ROM [55h]

The match ROM command followed by a 64-bit ROM code sequence allows the bus master to address a specific slave device on a multidrop or single-drop bus. Only the slave that exactly matches the 64-bit ROM code sequence will respond to the function command issued by the master; all other slaves on the bus will wait for a reset pulse.

SKIP ROM [CCh]

The master can use this command to address all devices on the bus simultaneously without sending out any ROM code information. For example, the master can make all DS1822-PARs on the bus perform simultaneous temperature conversions by issuing a Skip ROM command followed by a Convert T [44h] command.

Note that the Read Scratchpad [BEh] command can follow the Skip ROM command only if there is a single slave device on the bus. In this case time is saved by allowing the master to read from the slave without sending the device's 64-bit ROM code. A Skip ROM command followed by a Read Scratchpad command will cause a data collision on the bus if there is more than one slave since multiple devices will attempt to transmit data simultaneously.

ALARM SEARCH [ECh]

The operation of this command is identical to the operation of the Search ROM command except that only slaves with a set alarm flag will respond. This command allows the master device to determine if any DS1822-PARs experienced an alarm condition during the most recent temperature conversion. After every Alarm Search cycle (i.e., Alarm Search command followed by data exchange), the bus master must return to Step 1 (Initialization) in the transaction sequence. Refer to the OPERATION—ALARM SIGNALING section for an explanation of alarm flag operation.

DS1822-PAR FUNCTION COMMANDS

After the bus master has used a ROM command to address the DS1822-PAR with which it wishes to communicate, the master can issue one of the DS1822-PAR function commands. These commands allow the master to write to and read from the DS1822-PAR's scratchpad memory, initiate temperature conversions and determine the power supply mode. The DS1822-PAR function commands, which are described below, are summarized in Table 4 and illustrated by the flowchart in Figure 10.

CONVERT T [44h]

This command initiates a single temperature conversion. Following the conversion, the resulting thermal data is stored in the 2-byte temperature register in the scratchpad memory and the DS1822-PAR returns to its low-power idle state. Within 10 µs (max) after this command is issued the master must enable a strong pullup on the 1-Wire bus for the duration of the conversion (t_{conv}) as described in the PARASITE POWER section.

iButton is a registered trademark of Dallas Semiconductor.

WRITE SCRATCHPAD [4Eh]

This command allows the master to write three bytes of data to the DS1822-PAR's scratchpad. The first data byte is written into the T_H register (byte 2 of the scratchpad), the second byte is written into the T_L register (byte 3), and the third byte is written into the configuration register (byte 4). Data must be transmitted least significant bit first. All three bytes MUST be written before the master issues a reset, or the data may be corrupted.

READ SCRATCHPAD [BEh]

This command allows the master to read the contents of the scratchpad. The data transfer starts with the least significant bit of byte 0 and continues through the scratchpad until the 9th byte (byte 8–CRC) is read. If only part of the scratchpad contents is required, the master may issue a reset to terminate reading at any time.

COPY SCRATCHPAD [48h]

This command copies the contents of the scratchpad T_H, T_L and configuration registers (bytes 2, 3, and 4) to EEPROM. If the device is being used in parasite power mode, within 10µs (max) after this command is issued the master must enable a strong pullup on the 1-Wire bus for at least 10ms as described in the PARASITE POWER section.

RECALL E^2 [B8h]

This command recalls the alarm trigger values (T_H and T_L) and configuration data from EEPROM and places the data in bytes 2, 3, and 4, respectively, in the scratchpad memory. The master device can issue "read-time slots" (see the 1-WIRE BUS SYSTEM section) following the Recall E^2 command and the DS1822-PAR will indicate the status of the recall by transmitting 0 while the recall is in progress and 1 when the recall is done. The recall operation happens automatically at power-up, so valid data is available in the scratchpad as soon as power is applied to the device.

DS1822-PAR FUNCTION COMMAND SET Table 4

Command	Description	Protocol	1-Wire Bus Activity After Command is Issued	Notes
TEMPERATURE CONVERSION COMMANDS				
Convert T	Initiates temperature conversion.	44h	None	1
MEMORY COMMANDS				
Read Scratchpad	Reads the entire scratchpad including the CRC byte.	BEh	DS1822-PAR transmits up to 9 data bytes to master.	2
Write Scratchpad	Writes data into scratchpad bytes 2, 3, and 4 (T_H, T_L, and configuration registers).	4Eh	Master transmits three data bytes to DS1822-PAR.	3
Copy Scratchpad	Copies T_H, T_L, and configuration register data from the scratchpad to EEPROM.	48h	None	1
Recall E^2	Recalls T_H, T_L, and configuration register data from EEPROM to the scratchpad.	B8h	DS1822-PAR transmits recall status to master.	

NOTES:

1. The master must enable a strong pullup on the 1-Wire bus during temperature conversions and copies from the scratchpad to EEPROM. No other bus activity may take place during this time.
2. The master can interrupt the transmission of data at any time by issuing a reset.
3. All three bytes must be written before a reset is issued.

ROM COMMANDS FLOW CHART Figure 9

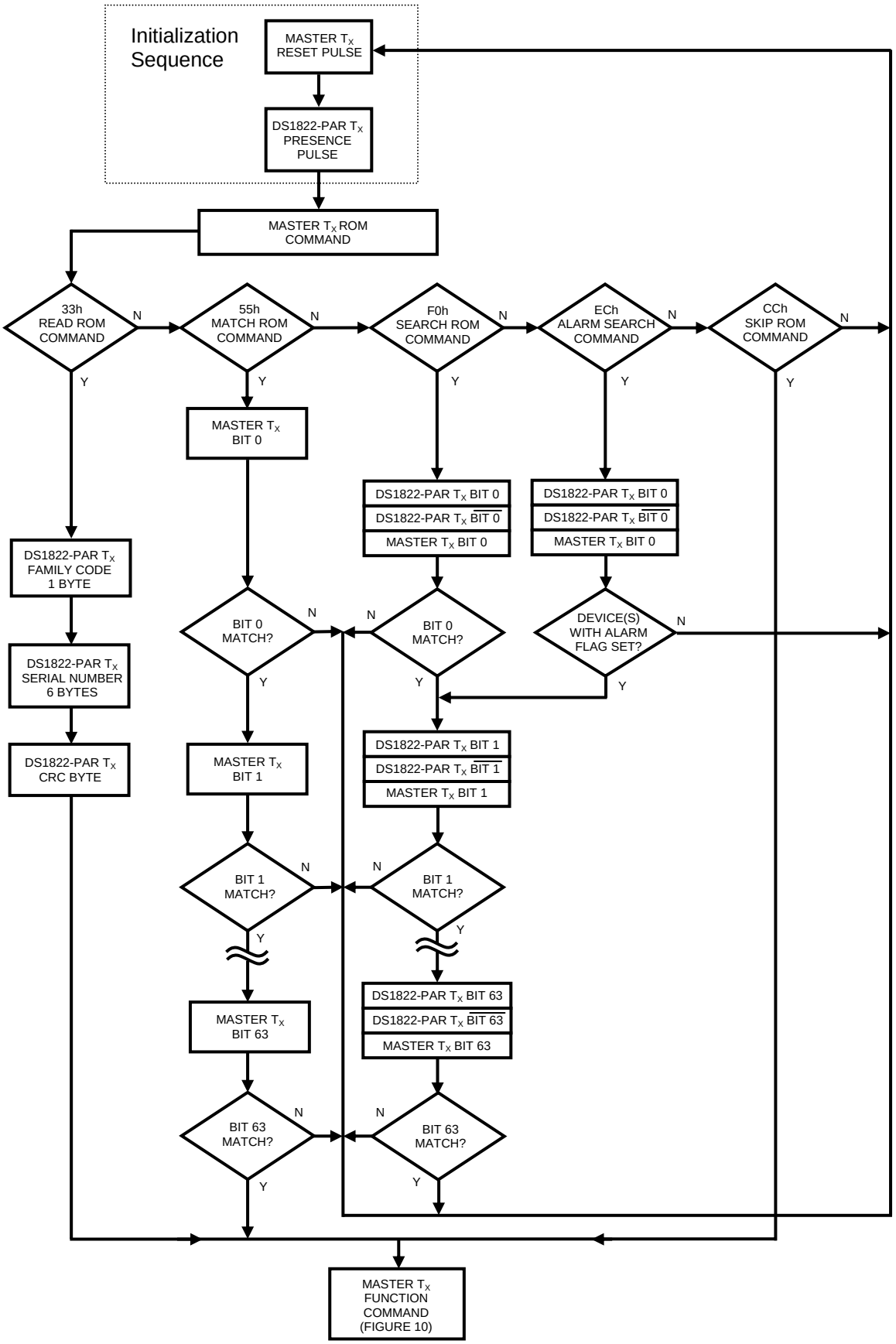

DS1822-PAR FUNCTION COMMANDS FLOW CHART Figure 10

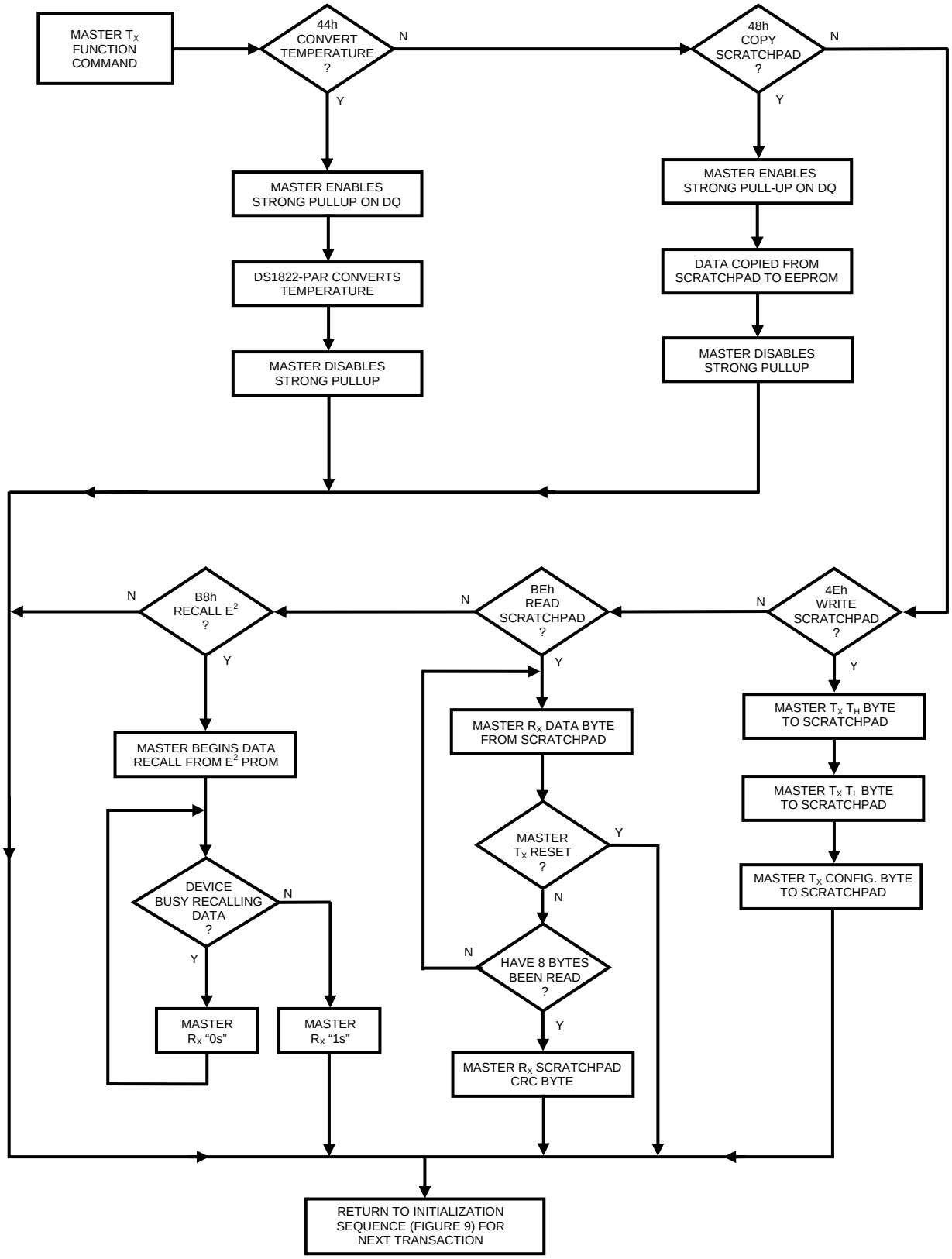

1-WIRE SIGNALING

The DS1822-PAR uses a strict 1-Wire communication protocol to insure data integrity. Several signal types are defined by this protocol: reset pulse, presence pulse, write 0, write 1, read 0, and read 1. All of these signals, with the exception of the presence pulse, are initiated by the bus master.

INITIALIZATION PROCEDURE: RESET AND PRESENCE PULSES

All communication with the DS1822-PAR begins with an initialization sequence that consists of a reset pulse from the master followed by a presence pulse from the DS1822-PAR. This is illustrated in Figure 11. When the DS1822-PAR sends the presence pulse in response to the reset, it is indicating to the master that it is on the bus and ready to operate.

During the initialization sequence the bus master transmits (T_X) the reset pulse by pulling the 1-Wire bus low for a minimum of 480µs. The bus master then releases the bus and goes into receive mode (R_X). When the bus is released, the 5k pullup resistor pulls the 1-Wire bus high. When the DS1822-PAR detects this rising edge, it waits 15µs to 60µs and then transmits a presence pulse by pulling the 1-Wire bus low for 60µs to 240µs.

INITIALIZATION TIMING Figure 11

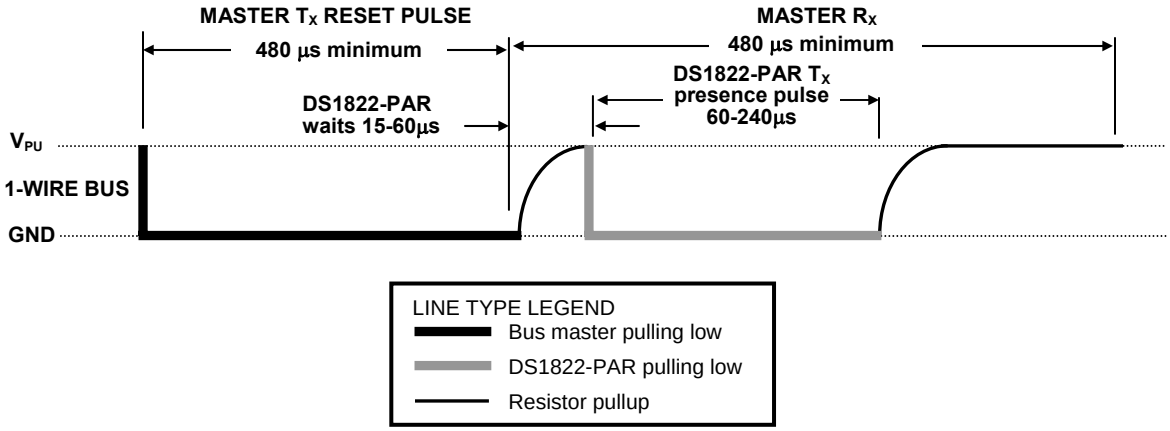

READ/WRITE-TIME SLOTS

The bus master writes data to the DS1822-PAR during write-time slots and reads data from the DS1822-PAR during read-time slots. One bit of data is transmitted over the 1-Wire bus per time slot.

WRITE-TIME SLOTS

There are two types of write-time slots: “Write 1” time slots and “Write 0” time slots. The bus master uses a Write 1 time slot to write a logic 1 to the DS1822-PAR and a Write 0 time slot to write a logic 0 to the DS1822-PAR. All write-time slots must be a minimum of 60µs in duration with a minimum of a 1µs recovery time between individual write slots. Both types of write-time slots are initiated by the master pulling the 1-Wire bus low (see Figure 12).

To generate a Write 1 time slot, after pulling the 1-Wire bus low, the bus master must release the 1-Wire bus within 15µs. When the bus is released, the 5k pullup resistor will pull the bus high. To generate a Write 0 time slot, after pulling the 1-Wire bus low, the bus master must continue to hold the bus low for the duration of the time slot (at least 60µs).

The DS1822-PAR samples the 1-Wire bus during a window that lasts from 15µs to 60µs after the master initiates the write-time slot. If the bus is high during the sampling window, a 1 is written to the DS1822-PAR. If the line is low, a 0 is written to the DS1822-PAR.

READ/WRITE-TIME SLOT TIMING DIAGRAM Figure 12

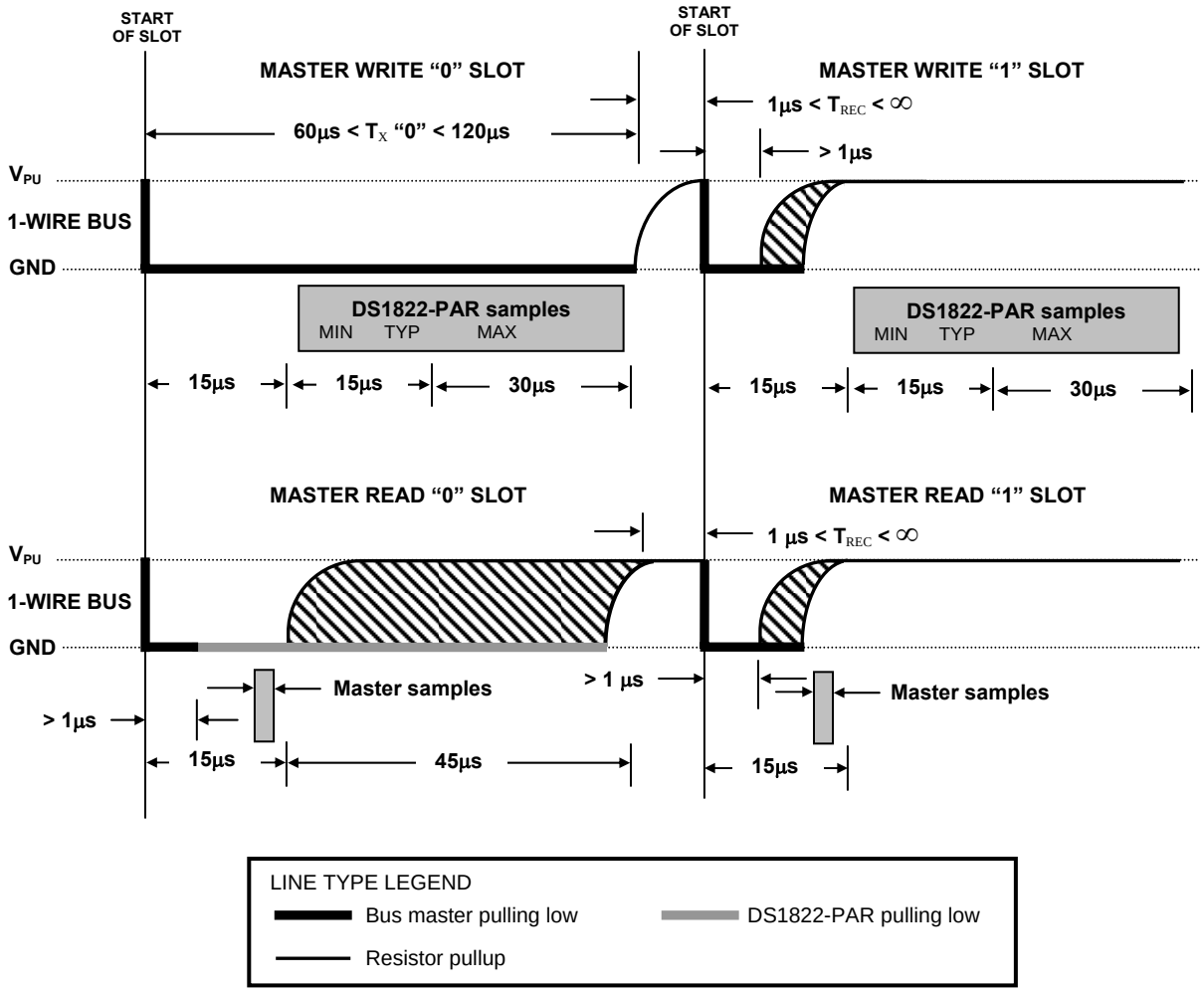

READ-TIME SLOTS

The DS1822-PAR can only transmit data to the master when the master issues read-time slots. Therefore, the master must generate read-time slots immediately after issuing a Read Scratchpad [BEh] command, so that the DS1822-PAR can provide the requested data. In addition, the master can generate read-time slots after issuing a Recall E^2 [B8h] command to find out the recall status as explained in the DS1822-PAR FUNCTION COMMAND section.

All read-time slots must be a minimum of 60 µs in duration with a minimum of a 1µs recovery time between slots. A read-time slot is initiated by the master device pulling the 1-Wire bus low for a minimum of µs and then releasing the bus (see Figure 12). After the master initiates the read-time slots, the DS1822-PAR will begin transmitting a 1 or 0 on bus. The DS1822-PAR transmits a 1 by leaving the bus high and transmits a 0 by pulling the bus low. When transmitting a 0, the DS1822-PAR will release the bus by the end of the time slot, and the bus will be pulled back to its high idle state by the pullup

resister. Output data from the DS1822-PAR is valid for 15µs after the falling edge that initiated the read-time slots. Therefore, the master must release the bus and then sample the bus state within 15µs from the start of the slot.

Figure 13 illustrates that the sum of T_{INIT}, T_{RC}, and T_{SAMPLE} must be less than 15µs for a read-time slots. Figure 14 shows that system timing margin is maximized by keeping T_{INIT} and T_{RC} as short as possible and by locating the master sample time during read-time slots towards the end of the 15µs period.

DETAILED MASTER READ 1 TIMING Figure 13

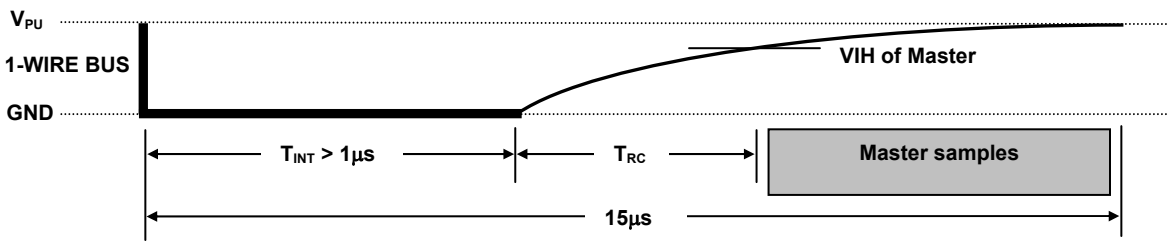

RECOMMENDED MASTER READ 1 TIMING Figure 14

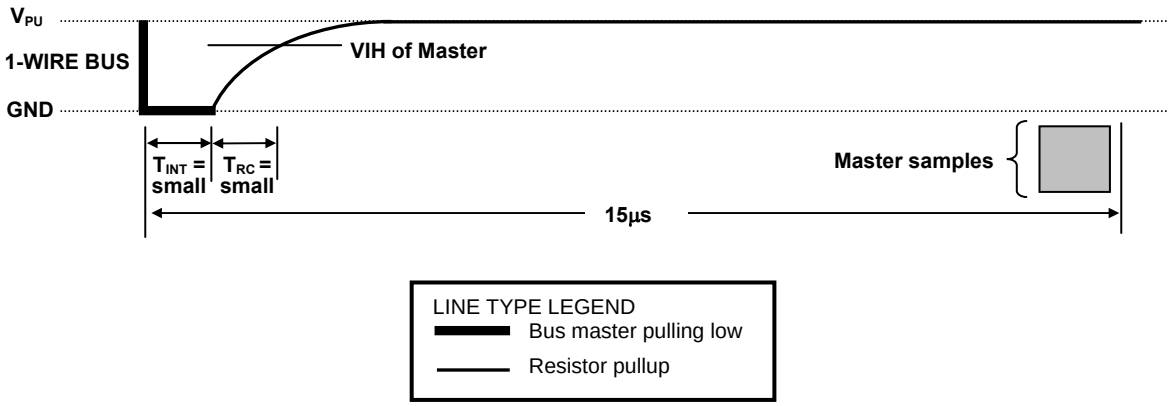

RELATED APPLICATION NOTES

The following Application Notes can be applied to the DS1822-PAR. These notes can be obtained from the Dallas Semiconductor "Application Note Book," via the Dallas website at http://www.dalsemi.com/, or through our faxback service at (214) 450-0441.

Application Note 27: *Understanding and Using Cyclic Redundancy Checks with Dallas Semiconductor Touch Memory Product*
Application Note 55: *Extending the Contact Range of Touch Memories*
Application Note 74: *Reading and Writing Touch Memories via Serial Interfaces*
Application Note 104: *Minimalist Temperature Control Demo*
Application Note 106: *Complex MicroLANs*
Application Note 108: *MicroLAN—In the Long Run*
Application Note 162: *Interfacing the DS18X20/DS1822 1-Wire Temperature Sensor in a Microcontroller Environment*

Sample 1-Wire subroutines that can be used in conjunction with AN74 can be downloaded from the Dallas website or anonymous FTP Site.

DS1822-PAR OPERATION EXAMPLE 1

In this example there are multiple DS1822-PARs on the bus. The bus master initiates a temperature conversion in a specific DS1822-PAR and then reads its scratchpad and recalculates the CRC to verify the data.

MASTER MODE	DATA (LSB FIRST)	COMMENTS
TX	Reset	Master issues reset pulse.
RX	Presence	DS1822-PARs respond with presence pulse.
TX	55h	Master issues Match ROM command.
TX	64-bit ROM code	Master sends DS1822-PAR ROM code.
TX	44h	Master issues Convert T command.
TX	DQ line held high by strong pullup	Master applies strong pullup to DQ for the duration of the conversion (t_{conv}).
TX	Reset	Master issues reset pulse.
RX	Presence	DS1822-PARs respond with presence pulse.
TX	55h	Master issues Match ROM command.
TX	64-bit ROM code	Master sends DS1822-PAR ROM code.
TX	BEh	Master issues Read Scratchpad command.
RX	9 data bytes	Master reads entire scratchpad including CRC. The master then recalculates the CRC of the first eight data bytes from the scratchpad and compares the calculated CRC with the read CRC (byte 9). If they match, the master continues; if not, the read operation is repeated.

DS1822-PAR OPERATION EXAMPLE 2

In this example there is only one DS1822-PAR on the bus. The master writes to the T_H, T_L, and configuration registers in the DS1822-PAR scratchpad and then reads the scratchpad and recalculates the CRC to verify the data. The master then copies the scratchpad contents to EEPROM.

MASTER MODE	DATA (LSB FIRST)	COMMENTS
TX	Reset	Master issues reset pulse.
RX	Presence	DS1822-PAR responds with presence pulse.
TX	CCh	Master issues Skip ROM command.
TX	4Eh	Master issues Write Scratchpad command.
TX	3 data bytes	Master sends three data bytes to scratchpad (T_H, T_L, and config).
TX	Reset	Master issues reset pulse.
RX	Presence	DS1822-PAR responds with presence pulse.
TX	CCh	Master issues Skip ROM command.
TX	BEh	Master issues Read Scratchpad command.
RX	9 data bytes	Master reads entire scratchpad including CRC. The master then recalculates the CRC of the first eight data bytes from the scratchpad and compares the calculated CRC with the read CRC (byte 9). If they match, the master continues; if not, the read operation is repeated.
TX	Reset	Master issues reset pulse.
RX	Presence	DS1822-PAR responds with presence pulse.
TX	CCh	Master issues Skip ROM command.
TX	48h	Master issues Copy Scratchpad command.
TX	DQ line held high by strong pullup	Master applies strong pullup to DQ for at least 10 ms while copy operation is in progress.

ABSOLUTE MAXIMUM RATINGS*

Voltage on Any Pin Relative to Ground	-0.5V to +6.0V
Operating Temperature Range	-55°C to +100°C
Storage Temperature Range	-55°C to +125°C
Solder Dip Temperature	See IPC/JEDEC J-STD-020A Specification
Reflow Oven Temperature	+220°C

**These are stress ratings only and functional operation of the device at these or any other conditions above those indicated in the operation sections of this specification is not implied. Exposure to absolute maximum rating conditions for extended periods of time may affect reliability.*

DC ELECTRICAL CHARACTERISTICS (-55°C to +100°C; V_{PU} = 3.0V to 5.5V)

PARAMETER	SYMBOL	CONDITION	MIN	TYP	MAX	UNITS	NOTES
Pullup Supply Voltage	V_{PU}		3.0		5.5	V	1, 2
Thermometer Error	t_{ERR}	-10°C to +85°C			±2	°C	3
		-55°C to +100°C			±3		
Input Logic Low	V_{IL}		-0.3		+0.8	V	1, 4, 5
Input Logic High	V_{IH}		3.0		5.5	V	1, 6
Sink Current	I_L	$V_{I/O}$ = 0.4V	4.0			mA	1
Active Current	I_{DQA}			1	1.5	mA	7
DQ Input Current	I_{DQ}			5		µA	8
Drift				±0.2		°C	9

NOTES:

1. All voltages are referenced to ground.
2. The Pullup Supply Voltage specification assumes that the pullup device (resistor or transistor) is ideal, and therefore the high level of the pullup is equal to V_{PU}. In order to meet the V_{IH} spec of the DS1822-PAR, the actual supply rail for the strong pullup transistor must include margin for the voltage drop across the transistor when it is turned on; thus: $V_{PU_ACTUAL} = V_{PU_IDEAL} + V_{TRANSISTOR}$.
3. See typical performance curve in Figure 15.
4. Logic low voltages are specified at a sink current of 4mA.
5. To always guarantee a presence pulse under low voltage parasite power conditions, V_{ILMAX} may have to be reduced to as low as 0.5V.
6. Logic high voltages are specified at a source current of 1mA.
7. Active current refers to supply current during active temperature conversions or EEPROM writes.
8. DQ line is high (“high-Z” state).
9. Drift data is based on a 1000 hour stress test at +125°C.

AC ELECTRICAL CHARACTERISTICS: NV MEMORY

(-55°C to +100°C; V_{PU} = 3.0V to 5.5V)

PARAMETER	SYMBOL	CONDITION	MIN	TYP	MAX	UNITS
NV Write Cycle Time	t_{wr}			2	10	ms
EEPROM Writes	N_{EEWR}	-55°C to +55°C	50k			writes
EEPROM Data Retention	t_{EEDR}	-55°C to +55°C	10			years

AC ELECTRICAL CHARACTERISTICS: (-55°C to +100°C; V_{PU} = 3.0V to 5.5V)

PARAMETER	SYMBOL	CONDITION	MIN	TYP	MAX	UNITS	NOTES
Temperature Conversion Time	t_{CONV}	9-bit resolution			93.75	ms	1
		10-bit resolution			187.5	ms	1
		11-bit resolution			375	ms	1
		12-bit resolution			750	ms	1
Time to Strong Pullup On	t_{SPON}	Start Convert T Command Issued			10	µs	
Time Slot	t_{SLOT}		60		120	µs	1
Recovery Time	t_{REC}		1			µs	1
Write 0 Low Time	r_{LOW0}		60		120	µs	1
Write 1 Low Time	t_{LOW1}		1		15	µs	1
Read Data Valid	t_{RDV}				15	µs	1
Reset Time High	t_{RSTH}		480			µs	1
Reset Time Low	t_{RSTL}		480		960	µs	1,2
Presence Detect High	t_{PDHIGH}		15		60	µs	1
Presence Detect Low	t_{PDLOW}		60		240	µs	1
Capacitance	$C_{IN/OUT}$				25	pF	

NOTES:

1. Refer to timing diagrams in Figure 16.
2. If t_{RSTL} > 960µs, a power on reset may occur.

TYPICAL PERFORMANCE CURVE Figure 15

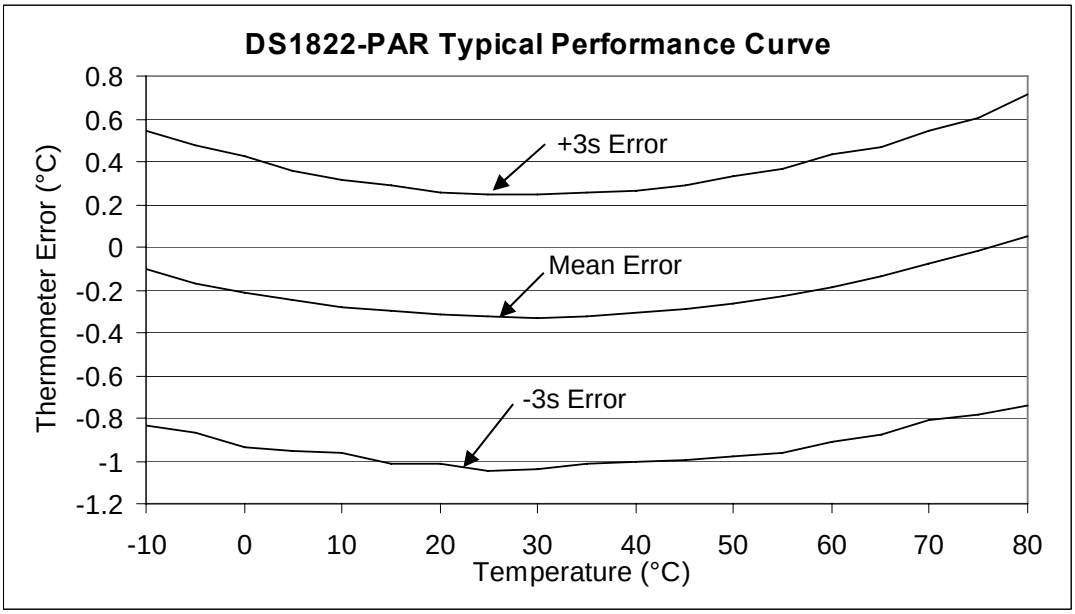

TIMING DIAGRAMS Figure 16

1–WIRE WRITE ZERO TIME SLOT

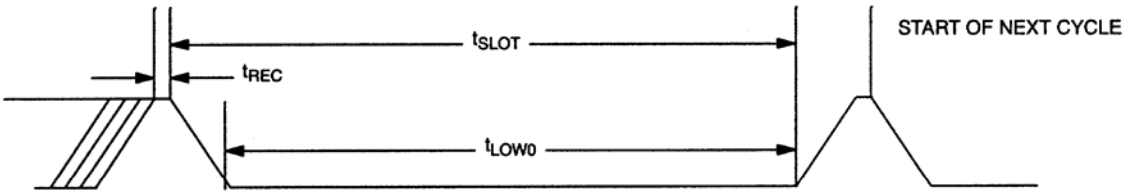

1–WIRE READ ZERO TIME SLOT

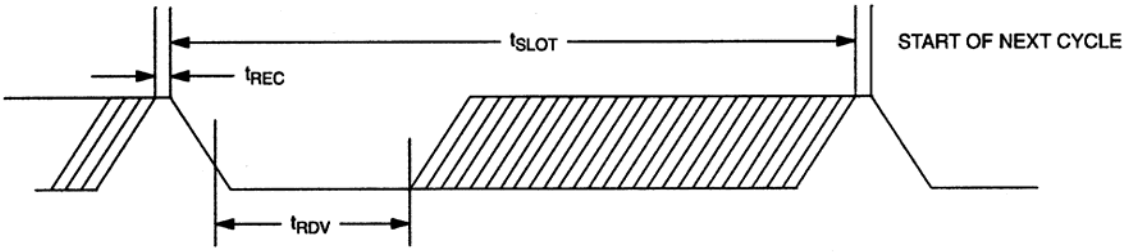

1–WIRE RESET PULSE

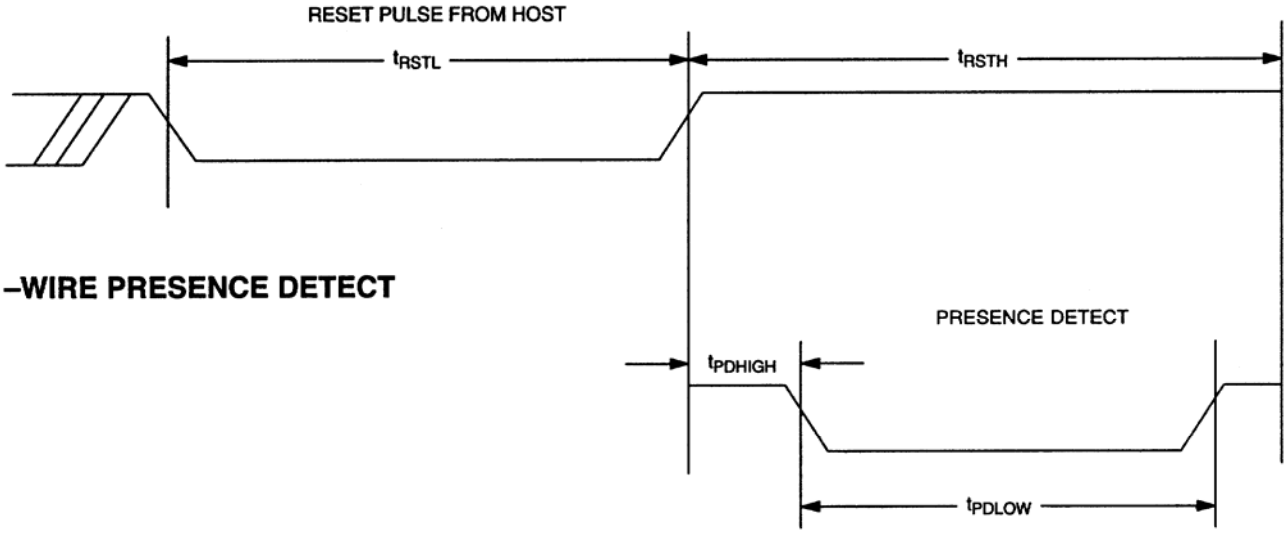

1–WIRE PRESENCE DETECT

Компания «ЭлектроПласт» предлагает заключение долгосрочных отношений при поставках импортных электронных компонентов на взаимовыгодных условиях!

Наши преимущества:

- Оперативные поставки широкого спектра электронных компонентов отечественного и импортного производства напрямую от производителей и с крупнейших мировых складов;
- Поставка более 17-ти миллионов наименований электронных компонентов;
- Поставка сложных, дефицитных, либо снятых с производства позиций;
- Оперативные сроки поставки под заказ (от 5 рабочих дней);
- Экспресс доставка в любую точку России;
- Техническая поддержка проекта, помощь в подборе аналогов, поставка прототипов;
- Система менеджмента качества сертифицирована по Международному стандарту ISO 9001;
- Лицензия ФСБ на осуществление работ с использованием сведений, составляющих государственную тайну;
- Поставка специализированных компонентов (Xilinx, Altera, Analog Devices, Intersil, Interpoint, Microsemi, Aeroflex, Peregrine, Syfer, Eurofarad, Texas Instrument, Miteq, Cobham, E2V, MA-COM, Hittite, Mini-Circuits,General Dynamics и др.);

Помимо этого, одним из направлений компании «ЭлектроПласт» является направление «Источники питания». Мы предлагаем Вам помощь Конструкторского отдела:

- Подбор оптимального решения, техническое обоснование при выборе компонента;
- Подбор аналогов;
- Консультации по применению компонента;
- Поставка образцов и прототипов;
- Техническая поддержка проекта;
- Защита от снятия компонента с производства.

Как с нами связаться

Телефон: 8 (812) 309 58 32 (многоканальный)
Факс: 8 (812) 320-02-42
Электронная почта: org@eplast1.ru
Адрес: 198099, г. Санкт-Петербург, ул. Калинина, дом 2, корпус 4, литера А.