UWQ-12/17-Q48 Series

Wide Input, Isolated DOSA Quarter Brick DC/DC Converters

Typical unit

FEATURES

- Fixed DC outputs, 12V @17A
- Industry standard quarter brick 2.3″ x 1.45″ x 0.46″ open frame package
- Wide range 18 to 75 Vdc input voltages with 2250 Volt Basic isolation
- Remote ON/Off enable control
- DOSA-compatible pinouts and form factor
- High efficiency synchronous rectifier topology
- Stable no-load operation
- Monotonic startup into pre-bias output condition
- Certified to UL/EN 60950-1, CSA-C22.2 No. 60950-1, 2nd edition safety approvals
- Extensive self-protection, OVP, input undervoltage, current limiting and thermal shutdown

PRODUCT OVERVIEW

The UWQ series offers high output current (up to 17 Amps) in an industry standard "quarter brick" package requiring no heat sink for most applications. The UWQ series delivers fixed DC output voltages up to 204 Watts (12V @17A) for printed circuit board mounting. Wide range inputs of 18 to 75 Volts DC (48 Volts nominal) are ideal for datacom and telecom systems.

Advanced automated surface mount assembly and planar magnetics deliver galvanic isolation rated at 2250 Vdc for basic insulation. To power digital systems, the outputs offer fast settling to current steps and tolerance of higher capacitive loads. Excellent ripple and noise specifications assure compatibility to CPU's, ASIC's, programmable logic and FPGA's. No minimum load is required.

For systems needing controlled startup/shutdown, an external remote On/Off control may use either positive or negative polarity.

A wealth of self-protection features include input undervoltage lockout and overtemperature shutdown using an on-board temperature sensor; overcurrent protection using the "hiccup" auto-restart technique, provides indefinite short-circuit protection, along with output OVP. The synchronous rectifier topology offers high efficiency for minimal heat generation and "no heat sink" operation. The UWQ series is certified to safety standards UL/EN/IEC/CSA 60950-1, 2nd edition. It meets RFI/EMI conducted/radiated emission compliance to EN55022, CISPR22 with an external filter.

APPLICATIONS

- Embedded systems, datacom and telecom installations, wireless base stations
- Disk farms, data centers and cellular repeater sites
- Remote sensor systems, dedicated controllers
- Instrumentation systems, R&D platforms, automated test fixtures
- Data concentrators, voice forwarding and speech processing systems

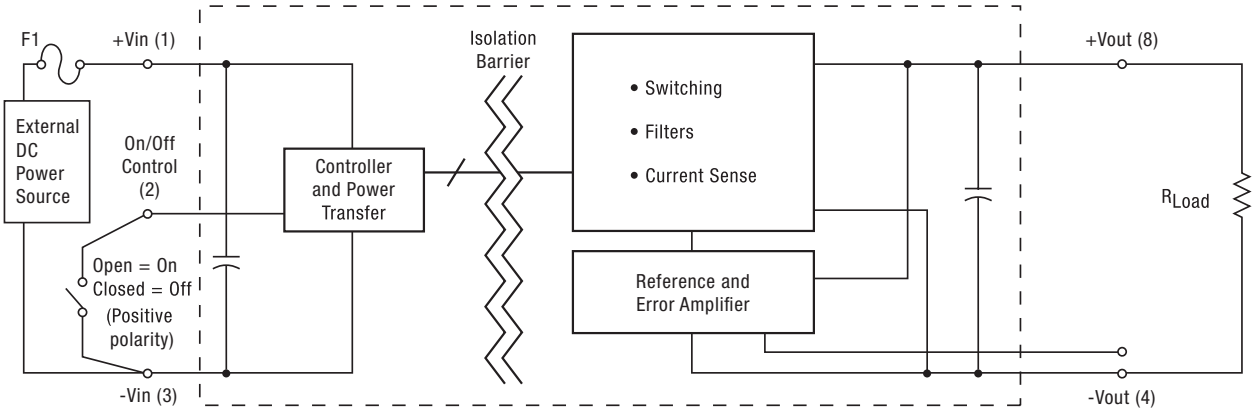

Figure 1. Connection Diagram

Typical topology is shown. Murata Power Solutions recommends an external fuse.

For full details go to www.murata-ps.com/rohs

ORDERING GUIDE ①

Root Model ①	Output							Input				Efficiency		Dimensions	
	V_{OUT} (Volts)	I_{OUT} (Amps, max.)	Power (Watts)	R/N (mV pk-pk) Typ.	R/N (mV pk-pk) Max.	Regulation (Max.) ② Line	Regulation (Max.) ② Load	V_{IN} Nom. (Volts)	Range (Volts)	I_{IN} no load (mA)	I_{IN} full load (Amps)	Min.	Typ.	(inches)	(mm)
UWQ-12/17-Q48 ③	12	17	204	100	120	±1%	±1.5%	48	18-75	80	4.62	90%	92%	2.30x1.45x0.46 max.	58.4x36.8x11.7

① Please refer to the part number structure for additional ordering information and options.
② All specifications are typical at nominal line voltage and full load, +25°C unless otherwise noted.

See detailed specifications. Output capacitors are 1 µF ceramic || 10 µF electrolytic with a 22uF input capacitor. These caps are necessary for our test equipment and may not be needed for your application.

PART NUMBER STRUCTURE

UWQ - 12 / 17 - Q48 N B Lx - C

Family Series:
Wide Input
Quarter Brick

Nominal Output Voltage

Maximum Rated Output :
Current in Amps

Input Voltage Range:
Q48 = 18-75 Volts (48V nominal)

On/Off Control Polarity
N = Negative polarity
P = Positive polarity

Baseplate (optional)
Blank = No baseplate, standard
B = Baseplate installed, optional

Pin length option
Blank = standard pin length 0.180 in. (4.6 mm)
L1 = 0.110 in. (2.79 mm)*
L2 = 0.145 in. (3.68 mm)*

RoHS Hazardous Materials compliance
C = RoHS-6 (does not claim EU RoHS exemption 7b–lead in solder), standard

*Special quantity order is required; no sample quantities available.

Note:
Some model number combinations may not be available. Please contact Murata Power Solutions.

Complete Model Number Example: **UWQ-12/17-Q48NBL1-C**

Negative On/Off logic, baseplate installed, 0.110″ pin length, RoHS-6 compliance

FUNCTIONAL SPECIFICATIONS

ABSOLUTE MAXIMUM RATINGS	Conditions ①	Minimum	Typical/Nominal	Maximum	Units
Input Voltage, Continuous	Full power operation	18	48	80	Vdc
Input Voltage, Transient	Operating or non-operating, 100 mS max. duration			100	Vdc
Isolation Voltage	Input to output			2250	Vdc
Input Reverse Polarity	None, install external fuse		None		Vdc
On/Off Remote Control	Power on or off, referred to -Vin	0		13.5	Vdc
Output Power		0		210	W
Output Current	Current-limited, no damage, short-circuit protected	0		17	A
Storage Temperature Range	Vin = Zero (no power)	-55		125	°C
Absolute maximums are stress ratings. Exposure of devices to greater than any of these conditions may adversely affect long-term reliability. Proper operation under conditions other than those listed in the Performance/Functional Specifications Table is not implied or recommended.					
INPUT	**Conditions ① ③**				
Operating voltage range		18	48	75	Vdc
Recommended External Fuse	Fast blow		20		A
Start-up threshold, measured at 50% load	Rising input voltage	16.5	17.5	17.9	Vdc
Undervoltage shutdown, measured at 50% load	Falling input voltage	15	16	17	Vdc
Overvoltage protection	Rising input voltage		None		Vdc
Reverse Polarity Protection	None, install external fuse		None		Vdc
Internal Filter Type			L-C		
Input current					
Full Load Conditions	Vin = nominal		4.52	4.76	A
Low Line	Vin = minimum		12.06	12.69	A
Inrush Transient	Vin = 48V.		0.05	TBD	A2-Sec.
Output in Short Circuit			50	100	mA
No Load input current	Iout = minimum, unit=ON		80	150	mA
Shut down mode input current			5	6.5	mA
Reflected (back) ripple current ②	Measured at input with specified filter		15	25	mA, RMS
Back Ripple Current, No Filtering			500	525	mA-p-p
Back Ripple Current, with 22uF external input capacitor			300	400	mA-p-p
Pre-biased startup	External output voltage < Vset		Monotonic		
GENERAL and SAFETY					
Efficiency	Vin=48V, full load	90	92		%
	Vin=18V	90	92		%
Isolation					
Isolation Voltage, input to output	No baseplate	2250			Vdc
Isolation Voltage, input to baseplate	With baseplate	1500			Vdc
Isolation Voltage, output to baseplate	With baseplate	1500			Vdc
Insulation Safety Rating			basic		
Isolation Resistance			100		MΩ
Isolation Capacitance			1500		pF
Safety (certified to the following requirements)	UL-60950-1, CSA-C22.2 No.60950-1, IEC/EN60950-1, 2nd edition		Yes		
Calculated MTBF	Per Telcordia SR-332, issue 1, class 3, ground fixed, Tambient=+25°C		TBC		Hours x 10^3
DYNAMIC CHARACTERISTICS					
Fixed Switching Frequency		160	180	200	KHz
Startup Time	Power On, to Vout regulation band, 100% resistive load		60	65	mS
Startup Time	Remote ON to Vout Regulated		60	65	mS
Dynamic Load Response	50-75-50% load step to 3% error band		220	275	µSec
Dynamic Load Peak Deviation	same as above		±1100	±1300	mV
FEATURES and OPTIONS					
Remote On/Off Control ④					
"N" suffix:					
Negative Logic, ON state	ON = pin grounded or external voltage	0		1	Vdc
Negative Logic, OFF state	OFF = pin open or external voltage	3.5		13.5	Vdc
Control Current	open collector/drain		1	2	mA
"P" suffix:					
Positive Logic, ON state	ON = pin open or external voltage	3.5		13.5	V
Positive Logic, OFF state	OFF = ground pin or external voltage	0		1	V
Control Current	open collector/drain		1	2	mA
Base Plate	"B" suffix		optional		

FUNCTIONAL SPECIFICATIONS, (CONT.)

OUTPUT	Conditions ①	Minimum	Typical/Nominal	Maximum	Units
Total Output Power		0.0	204	210	W
Voltage					
Setting Accuracy, fixed output	At 50% load, not user adjustable	11.64	12	12.36	Vdc
Overvoltage Protection	Via magnetic feedback			15	Vdc
Current					
Output Current Range		0.0	17	17	A
Minimum Load			No minimum load		
Current Limit Inception	97% of Vnom., cold condition	19	21	23	A
Short Circuit					
Short Circuit Current	Hiccup technique, autorecovery within 1.25% of Vout		5	6	A
Short Circuit Duration (remove short for recovery)	Output shorted to ground, no damage		Continuous		
Short circuit protection method	Hiccup current limiting		Non-latching		
Regulation ⑤					
Line Regulation	Vin=min. to max., Vout=nom., full load			±0.65	% of Vout
Load Regulation	Iout=min. to max., Vin=nom.			±1.5	% of Vout
Ripple and Noise ⑥	5 Hz- 20 MHz BW, Cout=1μF MLCC paralleled with 10μF tantalum		100	120	mV pk-pk
Temperature Coefficient	At all outputs		0.02		% of Vout./°C
Maximum Capacitive Loading	Full resistive load, low ESR	0	5000		μF
MECHANICAL (Through Hole Models)					
Outline Dimensions (no baseplate)			2.3x1.45x0.46 max.		Inches
(Please refer to outline drawing)	LxWxH		58.4x36.8x11.68		mm
Outline Dimensions (with baseplate)			2.3x1.45x0.5		Inches
			58.4x36.8x12.7		mm
Weight	No baseplate		1.6		Ounces
	No baseplate		45		Grams
	With baseplate		2.24		Ounces
	With baseplate		63.5		Grams
Through Hole Pin Diameter			0.04 & 0.06		Inches
			1.016 & 1.52		mm
Through Hole Pin Material			Copper alloy		
TH Pin Plating Metal and Thickness	Nickel subplate		50		μ-inches
	Gold overplate		5		μ-inches
Baseplate Material			Aluminum		
ENVIRONMENTAL					
Operating Ambient Temperature Range	See derating curves	-40		85	°C
Operating Case Temperature	With baseplate, no derating	-40		110	°C
Storage Temperature	Vin = Zero (no power)	-55		125	°C
Thermal Protection/Shutdown	Measured in center	115	125	130	°C
Electromagnetic Interference	External filter is required				
Conducted, EN55022/CISPR22			B		Class
Radiated, EN55022/CISPR22			B		Class
RoHS rating			RoHS-6		

Notes

① Unless otherwise noted, all specifications apply at Vin = nominal, nominal output voltage and full output load. General conditions are near sea level altitude, no base plate installed and natural convection airflow unless otherwise specified. All models are tested and specified with external parallel 1 μF and 10 μF multi-layer ceramic output capacitors and a 22uF external input capacitor (see Technical Notes). All capacitors are low-ESR types wired close to the converter. These capacitors are necessary for our test equipment and may not be needed in the user's application.

② Input (back) ripple current is tested and specified over 5 Hz to 20 MHz bandwidth. Input filtering is Cin = 33 μF/100V, Cbus = 220μF/100V and Lbus = 12 μH.

③ All models are stable and regulate to specification under no load.

④ The Remote On/Off Control is referred to -Vin.

⑤ Regulation specifications describe the output voltage changes as the line voltage or load current is varied from its nominal or midpoint value to either extreme. The load step is ±25% of full load current.

⑥ Output Ripple and Noise is measured with Cout = 1μF MLCC paralleled with 10μF tantalum, 20 MHz oscilloscope bandwidth and full resistive load.

PERFORMANCE DATA, UWQ-12/17-Q48NB-C

Efficiency vs. Line Voltage and Load Current @ +25°C

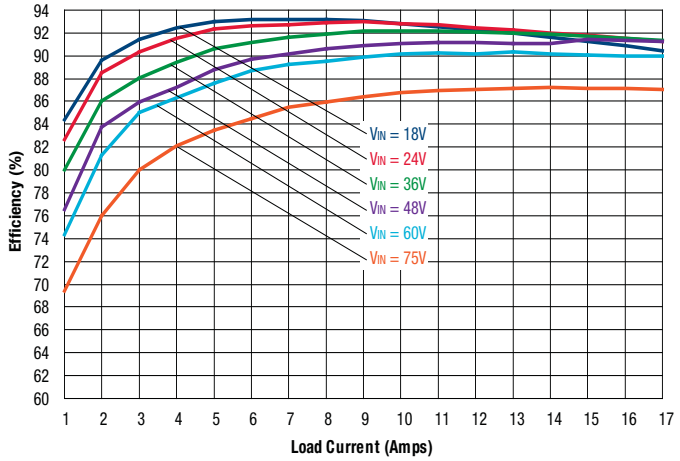

Maximum Current Temperature Derating at sea level
(Vin = 24V, air flow from Pin 1 to Pin 4 on PCB, with baseplate)

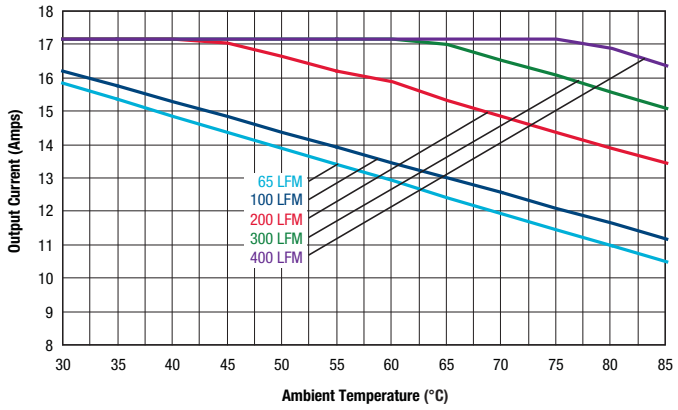

Maximum Current Temperature Derating at sea level
(Vin = 36V, air flow from Pin 1 to Pin 4 on PCB, with baseplate)

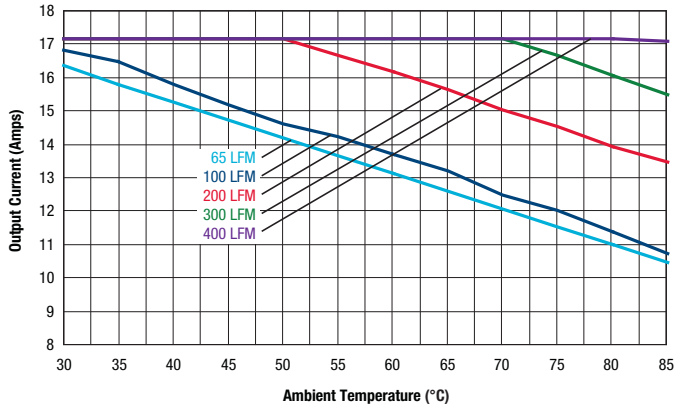

Maximum Current Temperature Derating at sea level
(Vin = 48V, air flow from Pin 1 to Pin 4 on PCB, with baseplate)

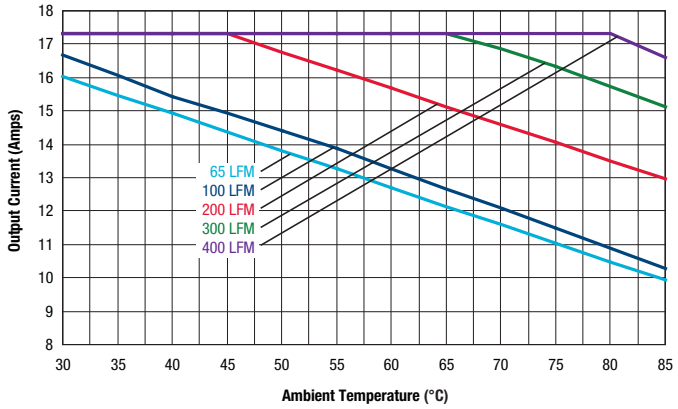

Maximum Current Temperature Derating at sea level
(Vin = 60V, air flow from Pin 1 to Pin 4 on PCB, with baseplate)

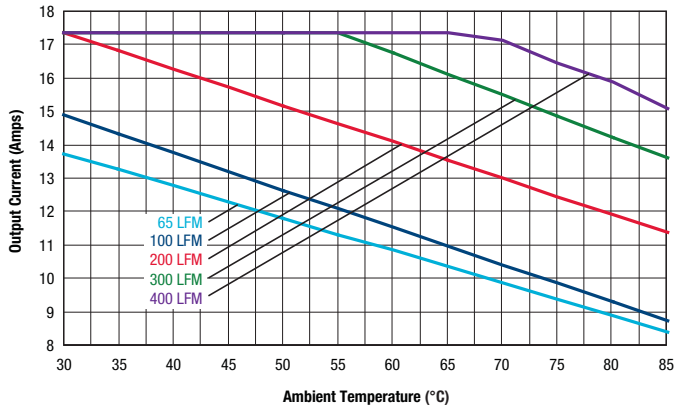

Maximum Current Temperature Derating at sea level
(Vin = 75V, air flow from Pin 1 to Pin 4 on PCB, with baseplate)

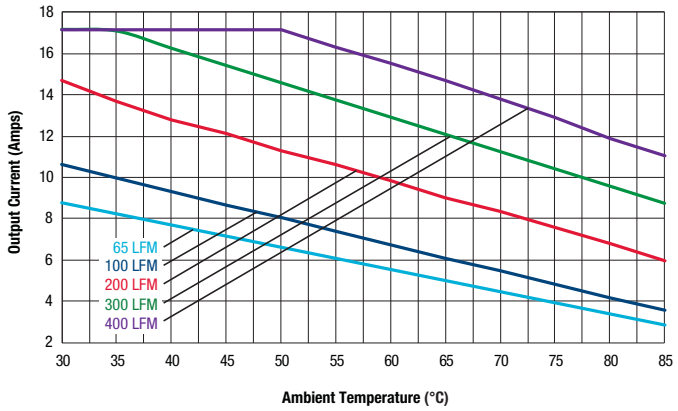

PERFORMANCE DATA, UWQ-12/17-Q48NB-C

Maximum Current Temperature Derating at sea level
Vin = 24V (air flow from Pin 1 to Pin 4 on PCB), no baseplate

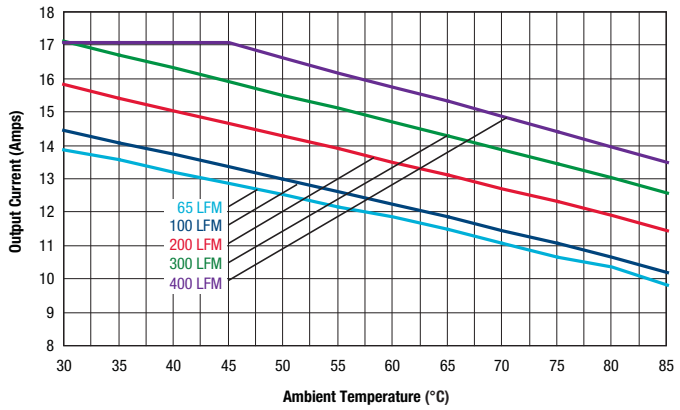

Maximum Current Temperature Derating at sea level
Vin = 36V (air flow from Pin 1 to Pin 4 on PCB), no baseplate

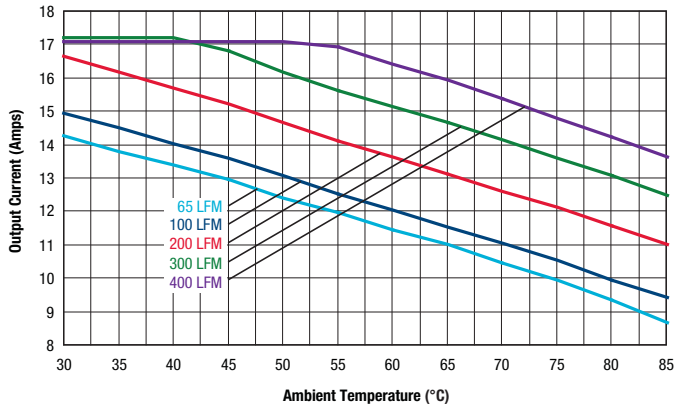

Maximum Current Temperature Derating at sea level
(Vin = 48V, air flow from Pin 1 to Pin 4 on PCB, no baseplate)

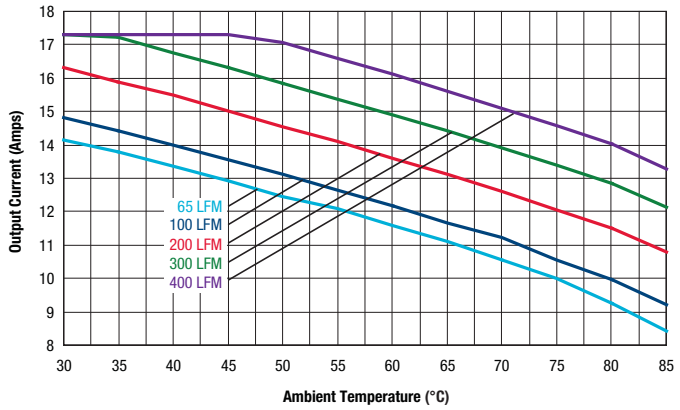

Stepload Transient Response (Vin=48V, Iout=50-75-50% of Imax, Cload=1uF || 10uF, Ta=+25°C) Ch2=Vout, Ch4=Iout

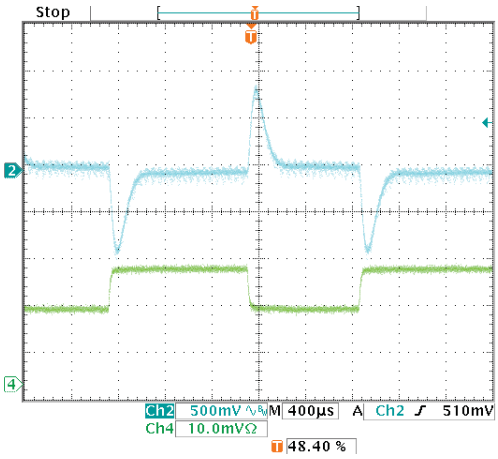

Stepload Transient Response (Vin=48V, Iout=25-75-25% of Imax, Cload=1uF || 10uF, Ta=+25°C) Ch2=Vout, Ch4=Iout

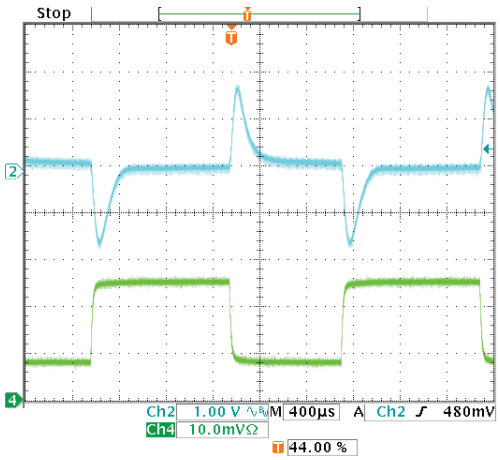

Stepload Transient Response (Vin=48V, Iout=50-75-50% of Imax, Cload=5000uF, Io=5A/div Ta=+25°C) Ch2=Vout, Ch4=Iout

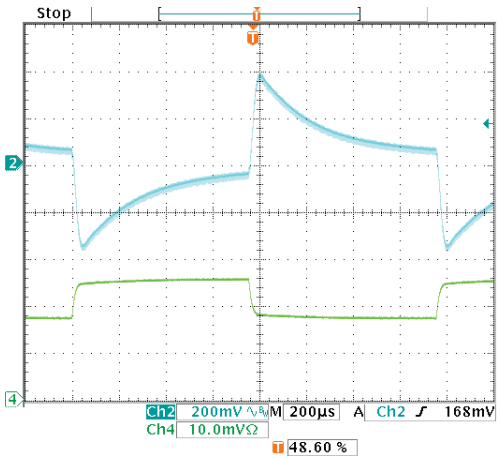

PERFORMANCE DATA, UWQ-12/17-Q48NB-C

Start-up Delay (Vin=48V, Iout=0A, Cload=0, Ta=+25°C) Ch1= Vin, Ch2= Vout

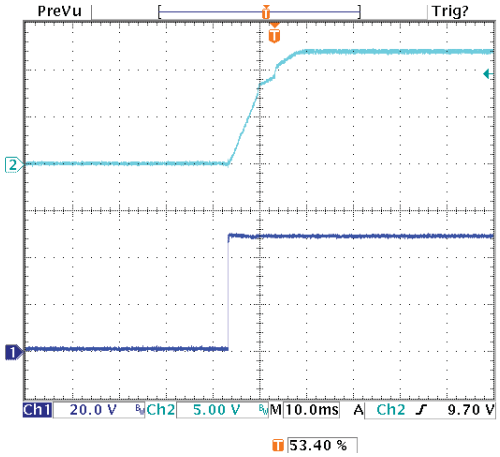

Start-up Delay (Vin=48V, Iout=17A, Cload=0, Ta=+25°C) Ch1= Vin, Ch2= Vout

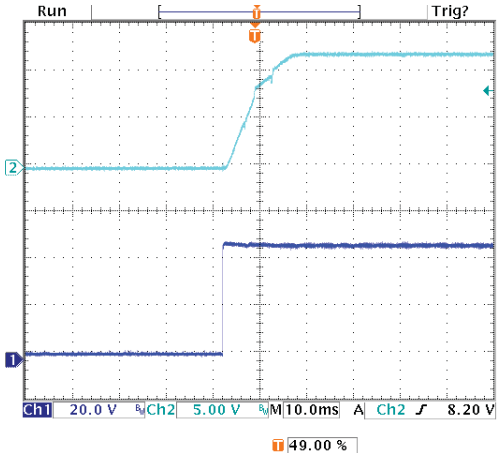

Start-up Delay (Vin=48V, Iout=17A, Cload=5000uF, Ta=+25°C) Ch1= Vin, Ch2= Vout

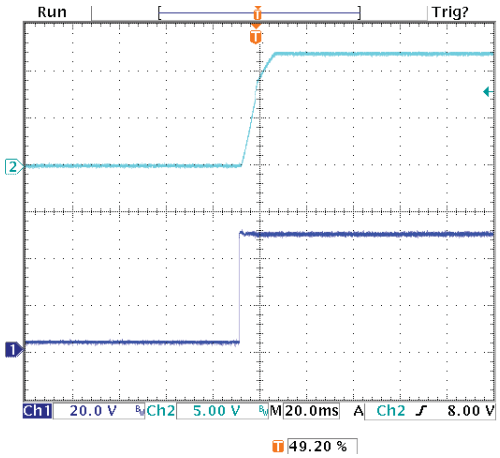

On/Off Enable Delay (Vin=48V, Vout=nom, Iout=0A, Ta=+25°C) Ch1= Enable, Ch2= Vout.

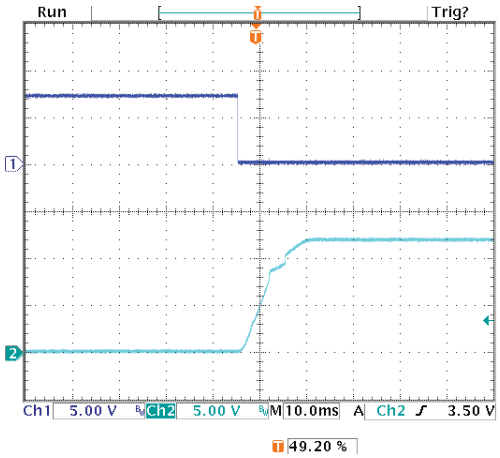

On/Off Enable Delay (Vin=48V, Vout=nom, Iout=17A, Ta=+25°C) Ch1= Enable, Ch2= Vout.

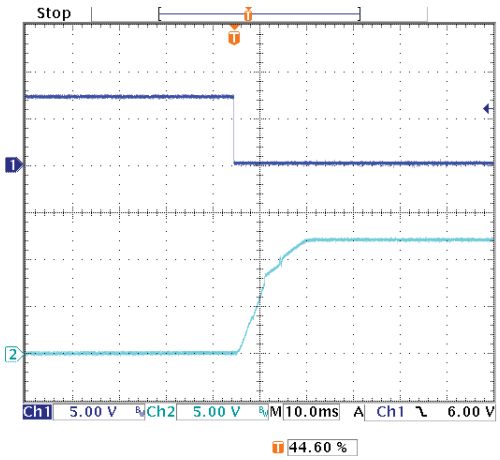

On/Off Enable Delay (Vin=48V, Vout=nom, Iout=17A, Cload=5000uF, Ta=+25°C) Ch1= Enable, Ch2= Vout.

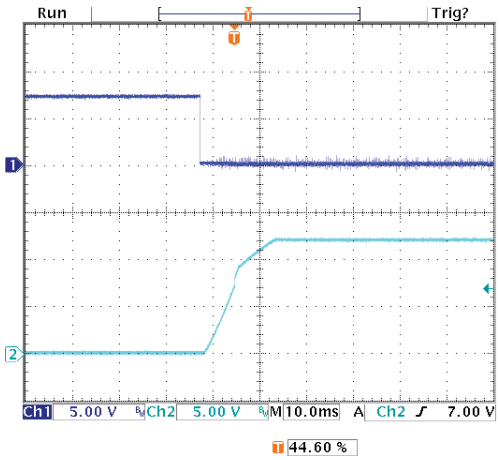

PERFORMANCE DATA, UWQ-12/17-Q48NB-C

Output ripple and Noise (Vin=48V, Iout=0A, Cload= 1uF || 10uF, Ta=+25°C, BW=20Mhz)

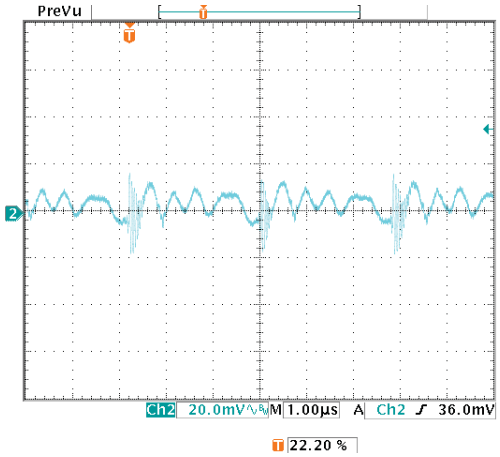

Output ripple and Noise (Vin=48V, Iout=17A, Cload= 1uF || 10uF, Ta=+25°C, BW=20Mhz)

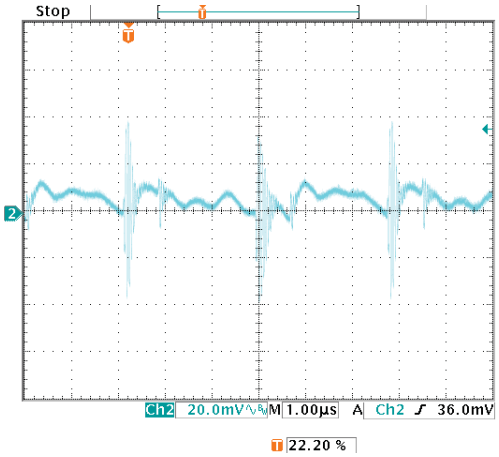

Thermal image with hot spot at 9.56A with 25°C ambient temperature. Natural convention is used with no forced airflow. Identifiable and recommended maximum value to be verified in application. Vin=48V, Q5 max temp=128°C/IPC9592 guidelines.

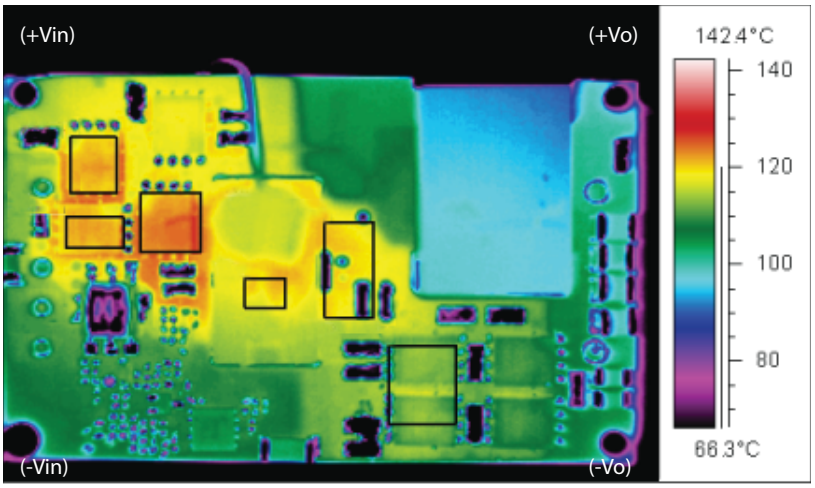

MECHANICAL SPECIFICATIONS (OPEN FRAME)

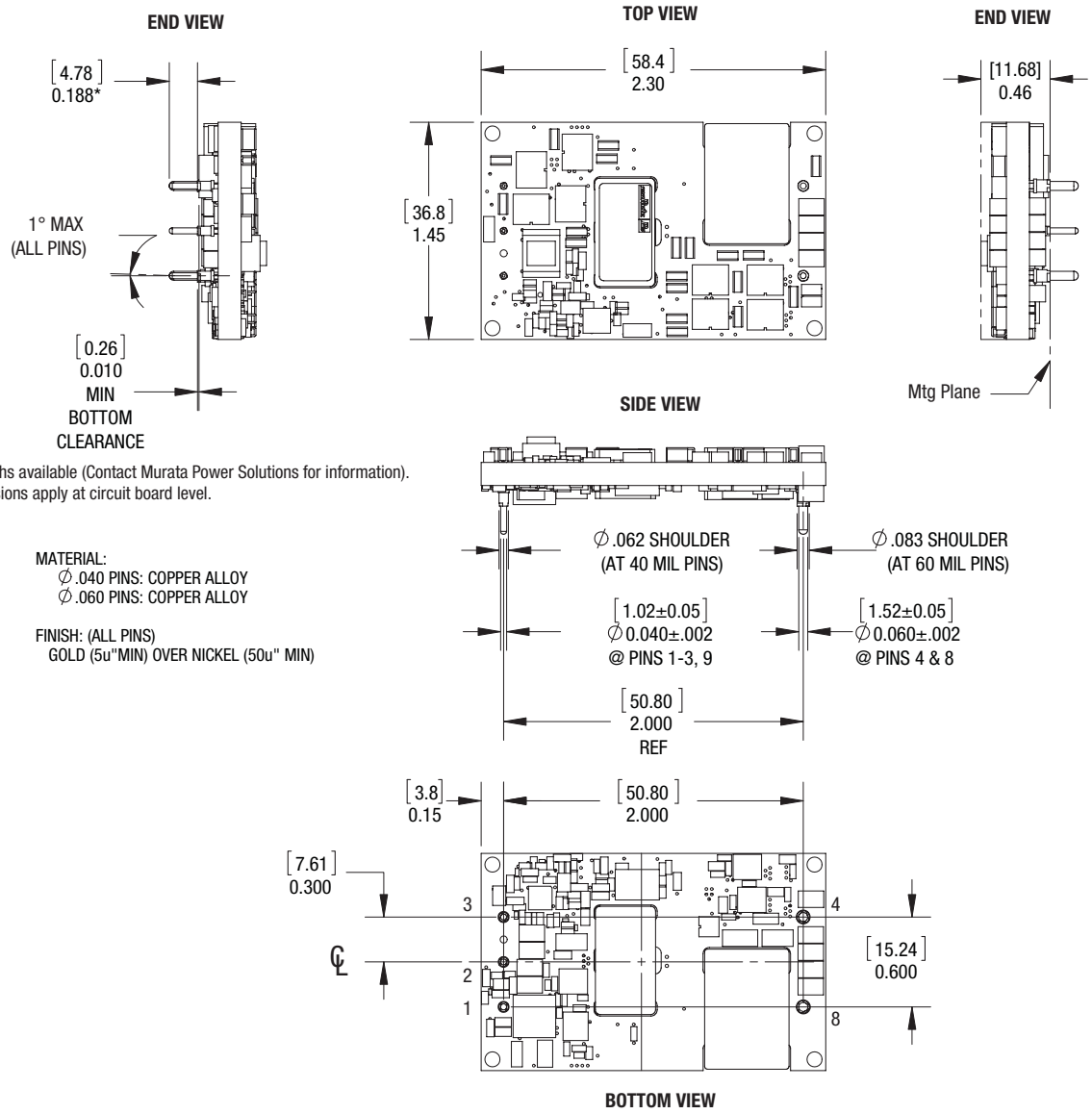

*Alternate pin lengths available (Contact Murata Power Solutions for information).
Pin location dimensions apply at circuit board level.

MATERIAL:
∅.040 PINS: COPPER ALLOY
∅.060 PINS: COPPER ALLOY

FINISH: (ALL PINS)
GOLD (5u"MIN) OVER NICKEL (50u" MIN)

Dimensions are in inches (mm) shown for ref. only.

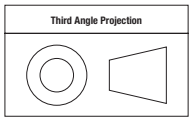

Tolerances (unless otherwise specified):
.XX ± 0.02 (0.5)
.XXX ± 0.010 (0.25)
Angles ± 2°

I/O Connections (pin side view)			
Pin	Function	Pin	Function
1	Positive Input	4	Negative Output
2	Remote On/Off Control		
3	Negative Input	8	Positive Output

MECHANICAL SPECIFICATIONS (BASEPLATE)

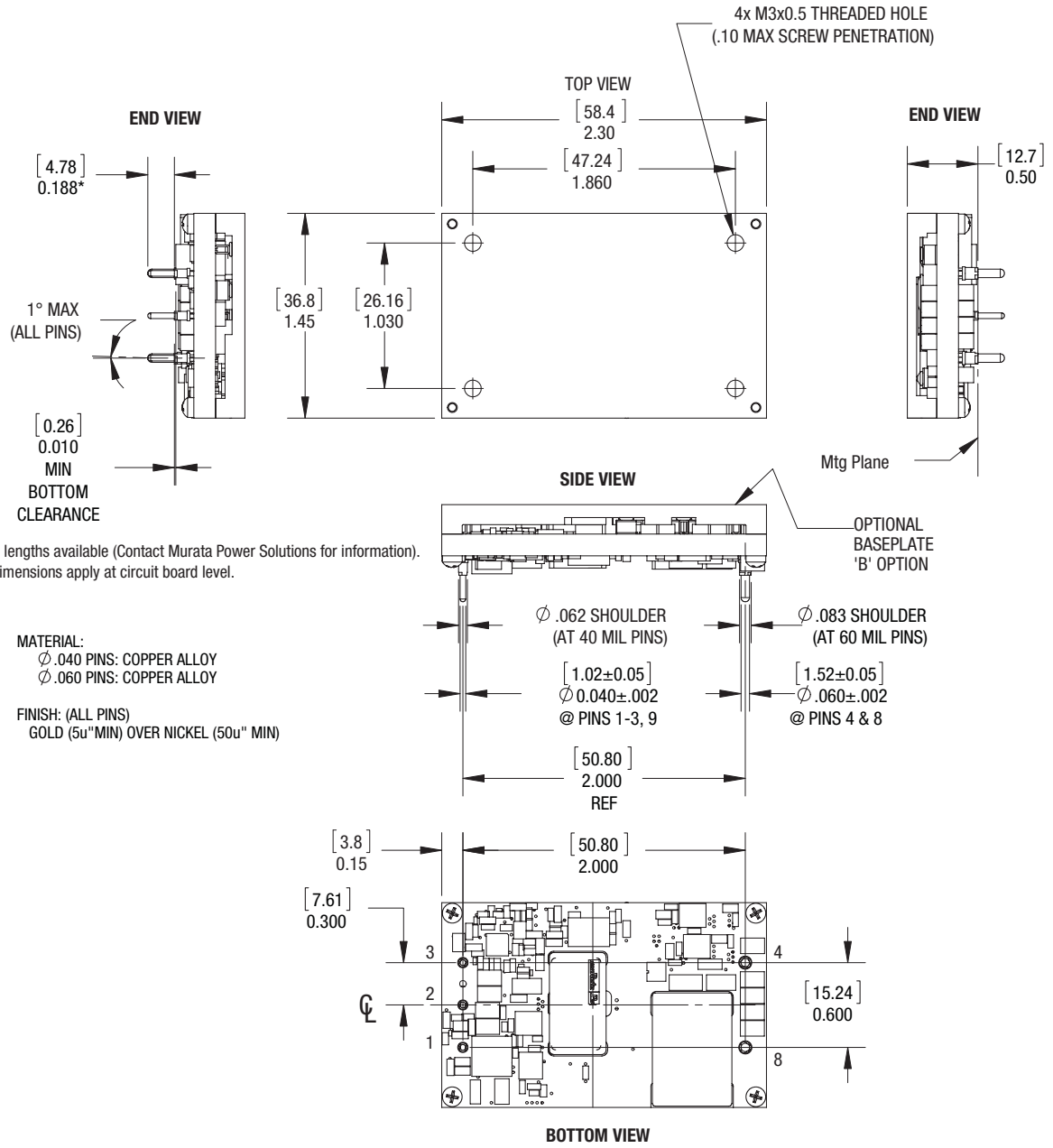

*Alternate pin lengths available (Contact Murata Power Solutions for information).
Pin location dimensions apply at circuit board level.

MATERIAL:
∅.040 PINS: COPPER ALLOY
∅.060 PINS: COPPER ALLOY

FINISH: (ALL PINS)
GOLD (5u"MIN) OVER NICKEL (50u" MIN)

Dimensions are in inches (mm) shown for ref. only.

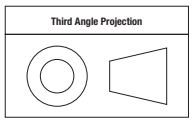

Tolerances (unless otherwise specified):
.XX ± 0.02 (0.5)
.XXX ± 0.010 (0.25)
Angles ± 2°

I/O Connections (pin side view)			
Pin	**Function**	**Pin**	**Function**
1	Positive Input	4	Negative Output
2	Remote On/Off Control		
3	Negative Input	8	Positive Output

RECOMMENDED FOOTPRINT

Recommended Footprint (view through converter)

REF: DOSA Standard Specification for Quarter-Brick DC/DC Converters

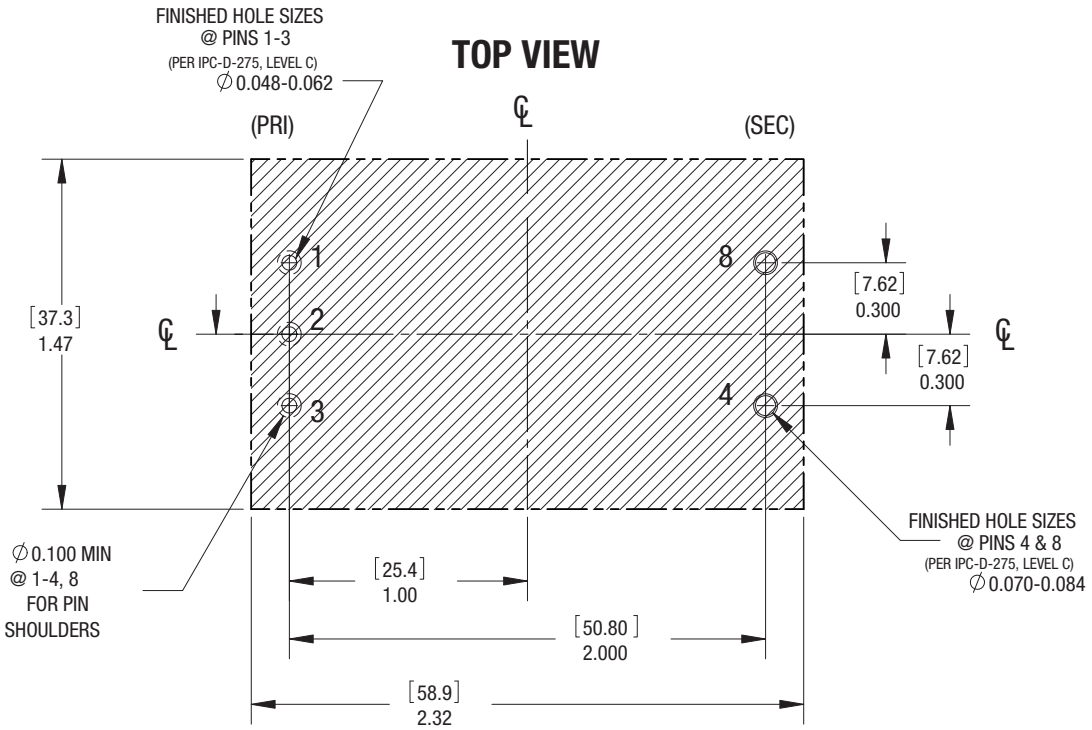

It is recommended that no parts be placed beneath converter (hatched area).

Dimensions are in inches (mm) shown for ref. only.

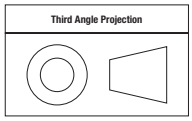

Tolerances (unless otherwise specified):
.XX ± 0.02 (0.5)
.XXX ± 0.010 (0.25)
Angles ± 2°

I/O Connections (pin side view)			
Pin	**Function**	**Pin**	**Function**
1	Positive Input	4	Negative Output
2	Remote On/Off Control		
3	Negative Input	8	Positive Output

STANDARD PACKAGING

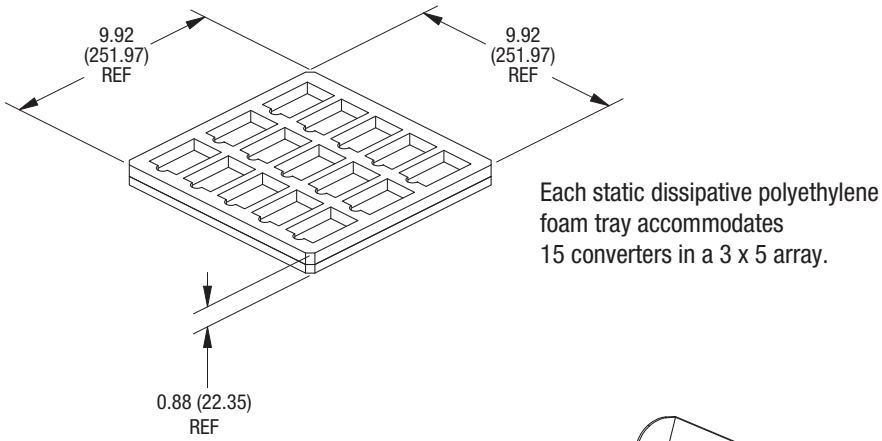

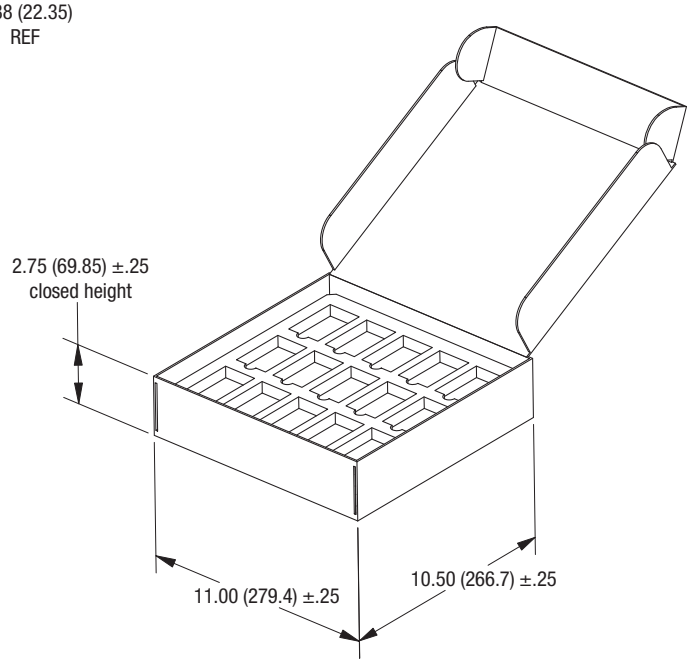

Carton accommodates two (2) trays yielding 30 converters per carton

Dimensions are in inches (mm) shown for ref. only.

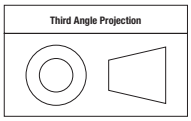

Tolerances (unless otherwise specified):
.XX ± 0.02 (0.5)
.XXX ± 0.010 (0.25)
Angles ± 2˚

TECHNICAL NOTES

Input Fusing

Certain applications and/or safety agencies may require fuses at the inputs of power conversion components. Fuses should also be used when there is the possibility of sustained input voltage reversal which is not current-limited. For greatest safety, we recommend a fast blow fuse installed in the ungrounded input supply line.

The installer must observe all relevant safety standards and regulations. For safety agency approvals, install the converter in compliance with the end-user safety standard.

Input Reverse-Polarity Protection

If the input voltage polarity is reversed, an internal diode will become forward biased and likely draw excessive current from the power source. If this source is not current-limited or the circuit appropriately fused, it could cause permanent damage to the converter.

Input Under-Voltage Shutdown and Start-Up Threshold

Under normal start-up conditions, converters will not begin to regulate properly until the rising input voltage exceeds and remains at the Start-Up Threshold Voltage (see Specifications). Once operating, converters will not turn off until the input voltage drops below the Under-Voltage Shutdown Limit. Subsequent restart will not occur until the input voltage rises again above the Start-Up Threshold. This built-in hysteresis prevents any unstable on/off operation at a single input voltage.

Users should be aware however of input sources near the Under-Voltage Shutdown whose voltage decays as input current is consumed (such as capacitor inputs), the converter shuts off and then restarts as the external capacitor recharges. Such situations could oscillate. To prevent this, make sure the operating input voltage is well above the UV Shutdown voltage AT ALL TIMES.

Start-Up Delay

Assuming that the output current is set at the rated maximum, the Vin to Vout Start-Up Delay (see Specifications) is the time interval between the point when the rising input voltage crosses the Start-Up Threshold and the fully loaded regulated output voltage enters and remains within its specified regulation band. Actual measured times will vary with input source impedance, external input capacitance, input voltage slew rate and final value of the input voltage as it appears at the converter.

These converters include a soft start circuit to moderate the duty cycle of the PWM controller at power up, thereby limiting the input inrush current.

The On/Off Remote Control interval from inception to V_{OUT} regulated assumes that the converter already has its input voltage stabilized above the Start-Up Threshold before the On command. The interval is measured from the On command until the output enters and remains within its specified regulation band. The specification assumes that the output is fully loaded at maximum rated current.

Input Source Impedance

These converters will operate to specifications without external components, assuming that the source voltage has very low impedance and reasonable input voltage regulation. Since real-world voltage sources have finite impedance, performance is improved by adding external filter components. Sometimes only a small ceramic capacitor is sufficient. Since it is difficult to totally characterize all applications, some experimentation may be needed. Note that external input capacitors must accept high speed switching currents.

Because of the switching nature of DC/DC converters, the input of these converters must be driven from a source with both low AC impedance and adequate DC input regulation. Performance will degrade with increasing input inductance. Excessive input inductance may inhibit operation. The DC input regulation specifies that the input voltage, once operating, must never degrade below the Shut-Down Threshold under all load conditions. Be sure to use adequate trace sizes and mount components close to the converter.

I/O Filtering, Input Ripple Current and Output Noise

All models in this converter series are tested and specified for input reflected ripple current and output noise using designated external input/output components, circuits and layout as shown in the figures below. External input capacitors (C_{IN} in the figure) serve primarily as energy storage elements, minimizing line voltage variations caused by transient IR drops in the input conductors. Users should select input capacitors for bulk capacitance (at appropriate frequencies), low ESR and high RMS ripple current ratings. In the figure below, the C_{BUS} and L_{BUS} components simulate a typical DC voltage bus. Your specific system configuration may require additional considerations. Please note that the values of C_{IN}, L_{BUS} and C_{BUS} may vary according to the specific converter model.

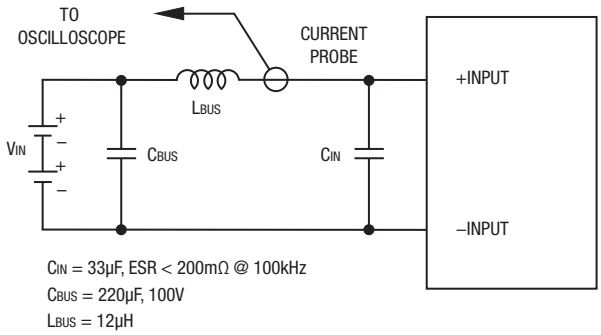

Figure 2. Measuring Input Ripple Current

In critical applications, output ripple and noise (also referred to as periodic and random deviations or PARD) may be reduced by adding filter elements such as multiple external capacitors. Be sure to calculate component temperature rise from reflected AC current dissipated inside capacitor ESR. In figure 3, the two copper strips simulate real-world printed circuit impedances between the power supply and its load. In order to minimize circuit errors and standardize tests between units, scope measurements should be made using BNC connectors or the probe ground should not exceed one half inch and soldered directly to the fixture.

Floating Outputs

Since these are isolated DC/DC converters, their outputs are “floating” with respect to their input. The essential feature of such isolation is ideal ZERO CURRENT FLOW between input and output. Real-world converters however do exhibit tiny leakage currents between input and output (see Specifications). These leakages consist of both an AC stray capacitance coupling component and a DC leakage resistance. When using the isolation feature, do not allow the isolation voltage to exceed specifications. Otherwise the converter may

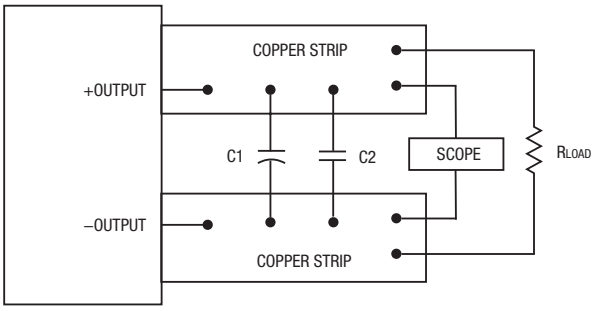

C1 = 1µF CERAMIC
C2 = 10µF LOW ESR
LOAD 2-3 INCHES (51-76mm) FROM MODULE

Figure 3. Measuring Output Ripple and Noise (PARD)

be damaged. Designers will normally use the negative output (-Output) as the ground return of the load circuit. You can however use the positive output (+Output) as the ground return to effectively reverse the output polarity.

Minimum Output Loading Requirements

These converters employ a synchronous rectifier design topology. All models regulate within specification and are stable under no load to full load conditions. Operation under no load might however slightly increase output ripple and noise.

Thermal Shutdown

To protect against thermal over-stress, these converters include thermal shutdown circuitry. If environmental conditions cause the temperature of the DC/DC's to rise above the Operating Temperature Range up to the shutdown temperature, an on-board electronic temperature sensor will power down the unit. When the temperature decreases below the turn-on threshold, the converter will automatically restart. There is a small amount of hysteresis to prevent rapid on/off cycling. CAUTION: If you operate too close to the thermal limits, the converter may shut down suddenly without warning. Be sure to thoroughly test your application to avoid unplanned thermal shutdown.

Temperature Derating Curves

The graphs in this data sheet illustrate typical operation under a variety of conditions. The Derating curves show the maximum continuous ambient air temperature and decreasing maximum output current which is acceptable under increasing forced airflow measured in Linear Feet per Minute ("LFM"). Note that these are AVERAGE measurements. The converter will accept brief increases in temperature and/or current or reduced airflow as long as the average is not exceeded.

Note that the temperatures are of the ambient airflow, not the converter itself which is obviously running at higher temperature than the outside air. Also note that "natural convection" is defined as very low flow rates which are not using fan-forced airflow. Depending on the application, "natural convection" is usually about 30-65 LFM but is not equal to still air (0 LFM).

Murata Power Solutions makes Characterization measurements in a closed cycle wind tunnel with calibrated airflow. We use both thermocouples and an infrared camera system to observe thermal performance. As a practical matter, it is quite difficult to insert an anemometer to precisely measure airflow in most applications. Sometimes it is possible to estimate the effective airflow if you thoroughly understand the enclosure geometry, entry/exit orifice areas and the fan flowrate specifications.

CAUTION: If you exceed these Derating guidelines, the converter may have an unplanned Over Temperature shut down. Also, these graphs are all collected near Sea Level altitude. Be sure to reduce the derating for higher altitude.

Output Overvoltage Protection (OVP)

This converter monitors its output voltage for an over-voltage condition using an on-board electronic comparator. The signal is optically coupled to the primary side PWM controller. If the output exceeds OVP limits, the sensing circuit will power down the unit, and the output voltage will decrease. After a time-out period, the PWM will automatically attempt to restart, causing the output voltage to ramp up to its rated value. It is not necessary to power down and reset the converter for this automatic OVP-recovery restart.

If the fault condition persists and the output voltage climbs to excessive levels, the OVP circuitry will initiate another shutdown cycle. This on/off cycling is referred to as "hiccup" mode.

Output Fusing

The converter is extensively protected against current, voltage and temperature extremes. However, your application circuit may need additional protection. In the extremely unlikely event of output circuit failure, excessive voltage could be applied to your circuit. Consider using an appropriate external protection.

Current Limiting (Power limit with current mode control)

As power demand increases on the output and enters the specified "limit inception range" (current in voltage mode and power in current mode) limiting circuitry activates in the DC-DC converter to limit/restrict the maximum current or total power available. In voltage mode, current limit can have a "constant or foldback" characteristic. In current mode, once the current reaches a certain range the output voltage will start to decrease while the output current continues to increase, thereby maintaining constant power, until a maximum peak current is reached and the converter enters a "hiccup" (on off cycling) mode of operation until the load is reduced below the threshold level, whereupon it will return to a normal mode of operation. Current limit inception is defined as the point where the output voltage has decreased by a pre-specified percentage (usually a 2% decrease from nominal).

Short Circuit Condition (Current mode control)

The short circuit condition is an extension of the "Current Limiting" condition. When the monitored peak current signal reaches a certain range, the PWM controller's outputs are shut off thereby turning the converter "off." This is followed by an extended time out period. This period can vary depending on other conditions such as the input voltage level. Following this time out period, the PWM controller will attempt to re-start the converter by initiating a "normal start cycle" which includes softstart. If the "fault condition" persists, another "hiccup" cycle is initiated. This "cycle" can and will continue indefinitely until such time as the "fault condition" is removed, at which time the converter will resume "normal operation." Operating in the "hiccup" mode during a fault condition is advantageous in that average input and output power levels are held low preventing excessive internal increases in temperature.

Remote On/Off Control

On the input side, a remote On/Off Control can be specified with either positive or negative logic as follows:

Positive: Models equipped with Positive Logic are enabled when the On/Off pin is left open or is pulled high to +13.5V_{DC} with respect to –V_{IN}. An internal bias current causes the open pin to rise to +V_{IN}. Positive-polarity devices are disabled when the On/Off is grounded or brought to within a low voltage (see Specifications) with respect to –V_{IN}.

Negative: Models with negative polarity are on (enabled) when the On/Off is grounded or brought to within a low voltage (see Specifications) with respect to –V_{IN}. The device is off (disabled) when the On/Off is left open or is pulled high to +13.5V_{DC} Max. with respect to –V_{IN}.

Dynamic control of the On/Off function should be able to sink the specified signal current when brought low and withstand specified voltage when brought high. Be aware too that there is a finite time in milliseconds (see Specifications) between the time of On/Off Control activation and stable, regulated output. This time will vary slightly with output load type and current and input conditions.

There are two CAUTIONs for the On/Off Control:

CAUTION: While it is possible to control the On/Off with external logic if you carefully observe the voltage levels, the preferred circuit is either an open drain/open collector transistor or a relay (which can thereupon be controlled by logic). The On/Off prefers to be set at approx. +13.5V (open pin) for the ON state, assuming positive logic.

CAUTION: Do not apply voltages to the On/Off pin when there is no input power voltage. Otherwise the converter may be permanently damaged.

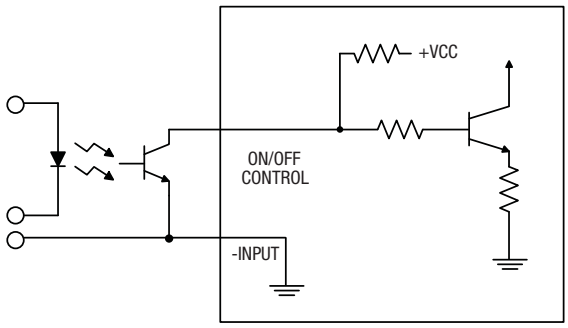

Figure 4. Driving the On/Off Control Pin (suggested circuit)

Emissions Performance

Murata Power Solutions measures its products for radio frequency emissions against the EN 55022 and CISPR 22 standards. Passive resistance loads are employed and the output is set to the maximum voltage. If you set up your own emissions testing, make sure the output load is rated at continuous power while doing the tests.

The recommended external input and output capacitors (if required) are included. Please refer to the fundamental switching frequency. All of this information is listed in the Product Specifications. An external discrete filter is installed and the circuit diagram is shown below.

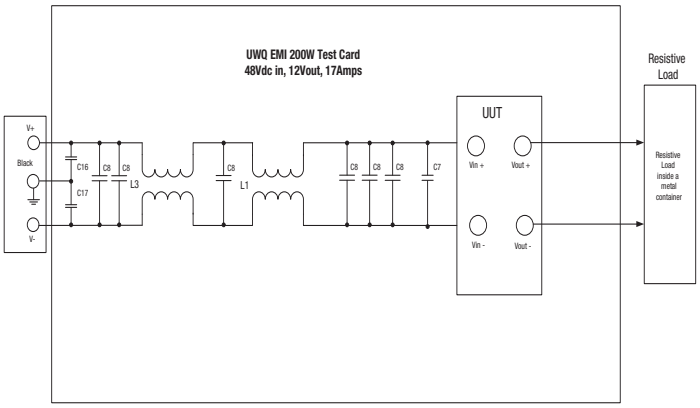

Figure 5. Conducted Emissions Test Circuit

[1] Conducted Emissions Parts List

Reference	Part Number	Description	Vendor
L1	PE-62913	1mH, 6A	Pulse
L3	500uH,10A, MPS	500uH,10A	Murata
C8		2.2ufd	Murata
C7	VZ Series	Qty 2 - Electrolytic Capacitor 22ufd, 100V	Panasonic
C16, C17		.22ufd	Unknown

[2] Conducted Emissions Test Equipment Used

Rohde & Schwarz EMI Test Receiver (9KHz – 1000MHz) ESPC

Rohde & Schwarz Software ESPC-1 Ver. 2.20

HP11947A Transient Limiter (Agilent)

OHMITE 25W – Resistor combinations

DC Source Programmable DC Power Supply Model 62012P-100-50

[3] Conducted Emissions Test Results

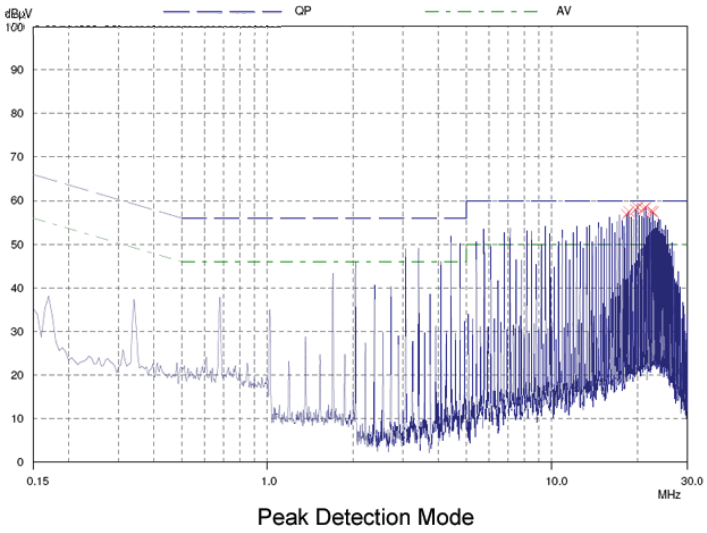

Graph 1. Conducted emissions performance, CISPR/EN55022, Class B, full load

Most applications can use the filtering which is already installed inside the converter or with the addition of the recommended external capacitors. For greater emissions suppression, consider additional filter components and/or shielding. Emissions performance will depend on the user's PC board layout, the chassis shielding environment and choice of external components. Please refer to Application Note GEAN02 for further discussion.

Since many factors affect both the amplitude and spectra of emissions, we recommend using an engineer who is experienced at emissions suppression.

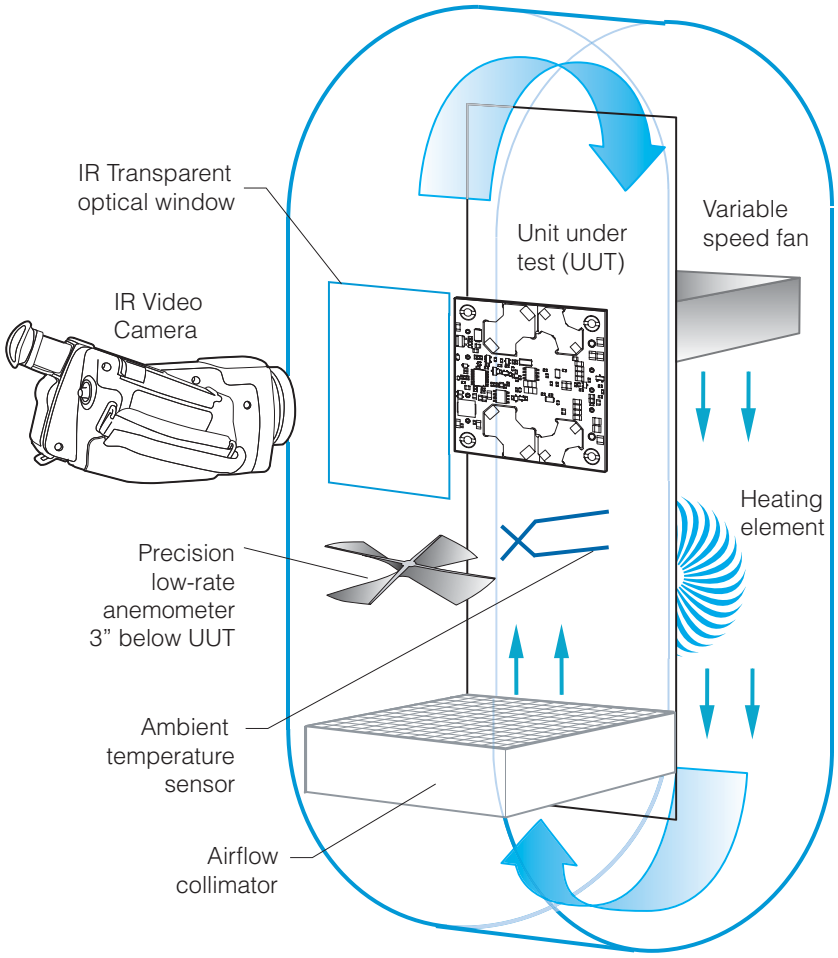

Figure 6. Vertical Wind Tunnel

Vertical Wind Tunnel

Murata Power Solutions employs a custom-designed enclosed vertical wind tunnel, infrared video camera system and test instrumentation for accurate airflow and heat dissipation analysis of power products. The system includes a precision low flow-rate anemometer, variable speed fan, power supply input and load controls, temperature gauges and adjustable heating element.

The IR camera can watch thermal characteristics of the Unit Under Test (UUT) with both dynamic loads and static steady-state conditions. A special optical port is used which is transparent to infrared wavelengths. The computer files from the IR camera can be studied for later analysis.

Both through-hole and surface mount converters are soldered down to a host carrier board for realistic heat absorption and spreading. Both longitudinal and transverse airflow studies are possible by rotation of this carrier board since there are often significant differences in the heat dissipation in the two airflow directions. The combination of both adjustable airflow, adjustable ambient heat and adjustable Input/Output currents and voltages mean that a very wide range of measurement conditions can be studied.

The airflow collimator mixes the heat from the heating element to make uniform temperature distribution. The collimator also reduces the amount of turbulence adjacent to the UUT by restoring laminar airflow. Such turbulence can change the effective heat transfer characteristics and give false readings. Excess turbulence removes more heat from some surfaces and less heat from others, possibly causing uneven overheating.

Both sides of the UUT are studied since there are different thermal gradients on each side. The adjustable heating element and fan, built-in temperature gauges and no-contact IR camera mean that power supplies are tested in real-world conditions.

Soldering Guidelines

Murata Power Solutions recommends the specifications below when installing these converters. These specifications vary depending on the solder type. Exceeding these specifications may cause damage to the product. Your production environment may differ; therefore please thoroughly review these guidelines with your process engineers.

Wave Solder Operations for through-hole mounted products (THMT)			
For Sn/Ag/Cu based solders:		**For Sn/Pb based solders:**	
Maximum Preheat Temperature	115° C.	Maximum Preheat Temperature	105° C.
Maximum Pot Temperature	270° C.	Maximum Pot Temperature	250° C.
Maximum Solder Dwell Time	7 seconds	Maximum Solder Dwell Time	6 seconds

Murata Power Solutions, Inc.
11 Cabot Boulevard, Mansfield, MA 02048-1151 U.S.A.
ISO 9001 and 14001 REGISTERED

Murata Power Solutions, Inc. makes no representation that the use of its products in the circuits described herein, or the use of other technical information contained herein, will not infringe upon existing or future patent rights. The descriptions contained herein do not imply the granting of licenses to make, use, or sell equipment constructed in accordance therewith. Specifications are subject to change without notice.
© 2012 Murata Power Solutions, Inc.

Компания «ЭлектроПласт» предлагает заключение долгосрочных отношений при поставках импортных электронных компонентов на взаимовыгодных условиях!

Наши преимущества:

- Оперативные поставки широкого спектра электронных компонентов отечественного и импортного производства напрямую от производителей и с крупнейших мировых складов;
- Поставка более 17-ти миллионов наименований электронных компонентов;
- Поставка сложных, дефицитных, либо снятых с производства позиций;
- Оперативные сроки поставки под заказ (от 5 рабочих дней);
- Экспресс доставка в любую точку России;
- Техническая поддержка проекта, помощь в подборе аналогов, поставка прототипов;
- Система менеджмента качества сертифицирована по Международному стандарту ISO 9001;
- Лицензия ФСБ на осуществление работ с использованием сведений, составляющих государственную тайну;
- Поставка специализированных компонентов (Xilinx, Altera, Analog Devices, Intersil, Interpoint, Microsemi, Aeroflex, Peregrine, Syfer, Eurofarad, Texas Instrument, Miteq, Cobham, E2V, MA-COM, Hittite, Mini-Circuits,General Dynamics и др.);

Помимо этого, одним из направлений компании «ЭлектроПласт» является направление «Источники питания». Мы предлагаем Вам помощь Конструкторского отдела:

- Подбор оптимального решения, техническое обоснование при выборе компонента;
- Подбор аналогов;
- Консультации по применению компонента;
- Поставка образцов и прототипов;
- Техническая поддержка проекта;
- Защита от снятия компонента с производства.

Как с нами связаться

Телефон: 8 (812) 309 58 32 (многоканальный)
Факс: 8 (812) 320-02-42
Электронная почта: org@eplast1.ru
Адрес: 198099, г. Санкт-Петербург, ул. Калинина, дом 2, корпус 4, литера А.