Note: All part numbers are RoHS Compliant.

Table of Contents—NEMA ETB

Overview (Selector Chart) 240-243
Catalog Numbering Code 244
Miniature Blocks, 100 Series 245-248
Medium Duty, 900 Series/ERT Series (Radiation Resistant) 249-257
Heavy Duty, 200 Series 259-266
Heavy Duty, Phenolic, 200 Series 267-272
Intermediate Heavy Duty, 800 Series 273-276
Ultra Heavy Duty, 400 Series 277-279
Fuse & Switch 281-288
One-Piece Phenolic Blocks 289-292
Accessories 293
Technical Summary 294-295
UL 1059 Basic Voltage Rating 296

Dimensions are in millimeters and inches unless otherwise specified.

Dimensions are shown for reference purposes only. Specifications subject to change.

USA: 1-800-522-6752
Canada: 1-905-470-4425
Mexico: 01-800-733-8926
C. America: 52-55-1106-0803

South America: 55-11-2103-6000
Hong Kong: 852-2735-1628
Japan: 81-44-844-8013
UK: 8706-080-208

Note: All part numbers are RoHS Compliant.

NEMA ETB Selector Chart

High Density Series 100 / Medium Duty Series 900

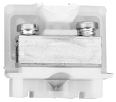

	High Density Miniature	High Density Single Tier	High Density Double Tier	Medium Duty			
Mounting	Direct Mount, Miniature Channel	Direct Mount, Standard & Breakaway Channel	Channel only: Standard & Breakaway	Direct Mount Standard, Miniature & Breakaway Channels			
AWG Wire Range	#30-12	#30-12	#30-12	#22-8	#22-8	10*, #22-14	#22-10
Contact Types	Tubular Clamp			Tubular Clamp	Tubular Screw	Strap Screw	Plug-In
R=Shipped with screws raised **B=**Shipped with screws bottomed	B			B	B	B	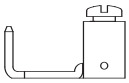
Ampacity	28A	28A	25A	30A	50A	35A*, 15A	30A
Voltage	300 V 600 V (Limited Power Circuits)	600 V	600 V	600 V	600 V	600 V	600 V
Center-to-Center Spacing	.25" [6.35]	.25" [6.35]	.24" [6.10]	.375" [9.53]	.375" [9.53]	.375" [9.53]	.375" [9.53]
Housing Material	Nylon or Polypropylene	Nylon	Nylon	PCT	PCT	PCT	PCT
Flammability Rating	UL94V-2 or UL94V-0	UL94V-2	UL94V-2	UL94V-0	UL94V-0	UL94V-0	UL94V-0
Max. Service Temperature	125˚C (257˚F) or 105˚C (222˚F)	125˚C (257˚F)	125˚C (257˚F)	150°C (302°F)	150°C (302°F)	150°C (302°F)	150°C (302°F)
Pages	246			250	250	250	251

*Acceptable for 35A max. factory wiring only when used with 10AWG wire preterminated with suitable ring tongue terminals.

LR25557 E63810

Dimensions are in millimeters and inches unless otherwise specified.

Dimensions are shown for reference purposes only. Specifications subject to change.

USA: 1-800-522-6752
Canada: 1-905-470-4425
Mexico: 01-800-733-8926
C. America: 52-55-1106-0803

South America: 55-11-2103-6000
Hong Kong: 852-2735-1628
Japan: 81-44-844-8013
UK: 8706-080-208

Note: All part numbers are RoHS Compliant.

NEMA ETB Selector Chart (Continued)

	Medium Duty Series 900		ERT Series			Heavy Duty Series 200			
	Medium Duty		**Medium Duty Radiation Resistant**			**Nylon or Polypropylene**			
Mounting	Direct Mount Standard, Miniature & Breakaway Channels		Standard and Breakaway Channels			Direct Mount or: Flat Base fits Miniature Channel. Dovetail Base fits Standard & Breakaway Channels			
AWG Wire Range	—	#18-12	#22-8	#22-8	#10*, #22-14	#18-6 smaller	#18-4	#18-8	#10 & smaller
Contact Types	Quick Connect	Tubular Quick Connect Combination	Tubular Clamp	Tubular Screw	Strap Screw	Tubular Clamp	Tubular Screw	Strap Clamp	Strap Screw
R=Shipped with screws raised **B=**Shipped with screws bottomed	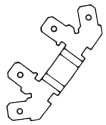 B	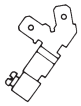 B	B	B	B	B	R	B	B
Ampacity	20A	20A	30A	50A	35A*, 15A	65A	85A	50A	35A
Voltage	300 V		600 V			600 V			
Center-to-Center Spacing	.375" [9.53]		.375" [9.53]			.50" [12.70]			
Housing Material	PCT		RYTON			Nylon or Polypropylene			
Flammability Rating	UL94V-0		UL94V-0			UL94V-2 or UL94V-0			
Max. Service Temperature	150°C (302°F)		200°C (392°F)			125˚C (257˚F) or 105°C (222°F)			
Pages	250	251	252			260-261			

LR25557 E63810

Catalog 1308389
Revised 6-07

www.tycoelectronics.com

Dimensions are in millimeters and inches unless otherwise specified.

Dimensions are shown for reference purposes only. Specifications subject to change.

USA: 1-800-522-6752
Canada: 1-905-470-4425
Mexico: 01-800-733-8926
C. America: 52-55-1106-0803

South America: 55-11-2103-6000
Hong Kong: 852-2735-1628
Japan: 81-44-844-8013
UK: 8706-080-208

Note: All part numbers are RoHS Compliant.

NEMA ETB Selector Chart (Continued)

	Heavy Duty Series 200				Intermediate HD Series 800	Ultra Heavy Duty Series 400	
	Phenolic				**Intermediate Heavy Duty**	**Ultra Heavy Duty**	
Mounting	Direct Mount or Standard & Breakaway Channels				Direct Mount or Standard & Breakaway Channels	Direct Mount or Standard & Breakaway Channels	
AWG Wire Range	#18-6	#18-4	#18-8	#10 & smaller	#12-1/0	#12-2/0 kcmil (MCM)	
Contact Types	Tubular Clamp	Tubular Screw	Strap Clamp	Strap Screw	Tubular Screw	Tubular Screw	Tubular Screw
R=Shipped with screws raised **B=**Shipped with screws bottomed	B	R	B	B	B	R	R
Ampacity	65A	85A	50A	35A	150A	175A	255A
Voltage	600 V				600 V	600 V	
Center-to-Center Spacing	.56" [14.22]				.75" [19.05]	1.19" [30.23]	
Housing Material	Phenolic				Nylon	Phenolic	
Flammability Rating	UL94V-1				UL94V-2	UL94V-1	
Max. Service Temperature	150°C (302°F)				125˚C (257˚F)	150˚C (302˚F)	
Pages	267-272				273-276	277-279	

Dimensions are in millimeters and inches unless otherwise specified.

Dimensions are shown for reference purposes only. Specifications subject to change.

USA: 1-800-522-6752
Canada: 1-905-470-4425
Mexico: 01-800-733-8926
C. America: 52-55-1106-0803

South America: 55-11-2103-6000
Hong Kong: 852-2735-1628
Japan: 81-44-844-8013
UK: 8706-080-208

Note: All part numbers are RoHS Compliant.

NEMA ETB Selector Chart (Continued)

	Fuse and Switch Series 300						One-Piece		
				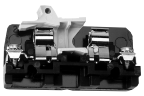					
	Nylon or Polypropylene			**Phenolic**			**One-Piece**		
Mounting	Direct Mount or Standard & Breakaway Channels			Direct Mount or Standard & Breakaway Channels			Direct Mount		
AWG Wire Range	#18-8	#18-8	#8	#18-8 & Smaller	#18-8	#8 & Smaller	#6	#8	#8
Contact Types	Tubular Screw	Strap Clamp	Strap Screw	Tubular Screw	Strap Clamp	Strap Screw	Tubular Clamp	Strap Clamp	Strap Screw
R=Shipped with screws raised **B=**Shipped with screws bottomed	B	B	B	B	B	B	B	B	B
Ampacity	15A Switch 30A Fuse			15A Switch 30A Fuse			70A	50A	50A
Voltage	600 V			600 V			600 V		
Center-to-Center Spacing	.75" [19.05]			.75" [19.05]			.63" [16.00]		
Housing Material	Nylon or Polypropylene			Phenolic			Phenolic		
Flammability Rating	UL94V-2 or UL94V-0			UL94V-1			UL94V-1		
Max. Service Temperature	125˚C (257˚F) or 105°C (222°F)			150˚C (302˚F)			150˚C (302˚F)		
Pages	282-285			286-288			289-292		

Dimensions are in millimeters and inches unless otherwise specified.

Dimensions are shown for reference purposes only. Specifications subject to change.

USA: 1-800-522-6752
Canada: 1-905-470-4425
Mexico: 01-800-733-8926
C. America: 52-55-1106-0803

South America: 55-11-2103-6000
Hong Kong: 852-2735-1628
Japan: 81-44-844-8013
UK: 8706-080-208

Note: All part numbers are RoHS Compliant.

Catalog Numbering Code

P 0 6 2 5 xxx 1

P = Polypropylene (blank for Nylon and Phenolic)
D = Duramax Contacts (Nickel plated contacts for highly corrosive environments)

0 = Dovetail Base (Blank for Flat Mount)

Series
1 = High Density
2 = Heavy Duty
3 = Fuse & Switch
4 = Ultra Heavy Duty
8 = Intermediate Heavy Duty

1 = Plain Top
2 = White Painted Top
3 = End Section

Type of Contact
1 = Strap Screw
2 = Tubular Screw (Heavy Duty Fuse & Switch)
3 = Tubular Clamp (Heavy Duty)
4 = Tube Screw
5 = Tube Clamp
6 = Tubular Screw (Ultra Heavy Duty)
8 = Strap Clamp
9 = Tubular Screw / Quick Connect
0 = None (End Section)

No. of Circuits (for Factory Assembled Blocks)

Marking Strip (Factory Assembled Blocks)

Note: Some catalog number combinations are not valid. Check appropriate catalog pages before ordering.

Dimensions are in millimeters and inches unless otherwise specified.

Dimensions are shown for reference purposes only. Specifications subject to change.

USA: 1-800-522-6752
Canada: 1-905-470-4425
Mexico: 01-800-733-8926
C. America: 52-55-1106-0803

South America: 55-11-2103-6000
Hong Kong: 852-2735-1628
Japan: 81-44-844-8013
UK: 8706-080-208

Note: All part numbers are RoHS Compliant.

100 Series High Density Miniature Blocks

Product Facts

- **No Wire Crimping Required — tubular clamp contacts hold wire ranging from #30 to #12 AWG better than crimp-on terminals.**
- **Saves Installation Time and Costs — tubular clamp contacts are supplied with captive screws backed out.**
- **Nylon housing standard; polypropylene for fire retardant characteristics.**
- **Positive Stop — helps prevent wire from being inserted too far, and helps prevent screw from being tightened on insulation. Easy access contact provides for safe, reliable, and cost-effective connection.**
- **Quick Installation and Change — additional sections may be added or removed without removing channel mounting screw.**
- **Choice of Five Mounting Channels:**
  - **Miniature aluminum**
  - **Zinc-plated steel**
  - **Pre-punched aluminum**
  - **Break-away steel**
- **Single and Double Tier blocks fit all standard BUCHANAN mounting channels. Single Tier blocks fit both miniature and standard channels.**
- **Choice of Marking Surfaces — matte-finish area for marking directly on block; slide-in vinyl strip (blank or preprinted) also available.**

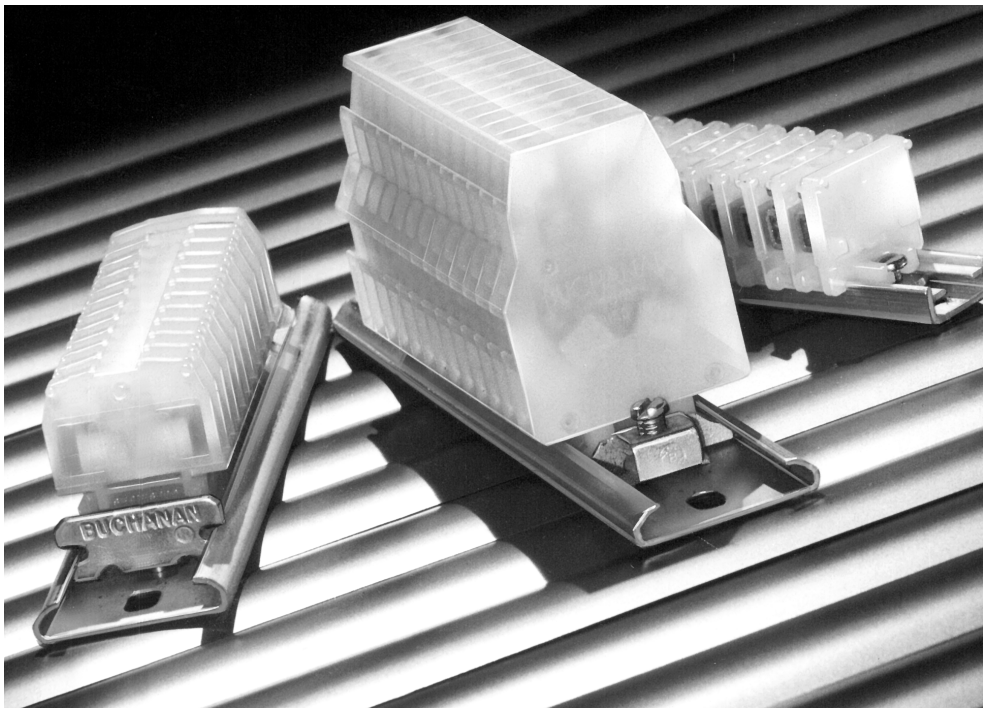

These miniature terminal blocks fit on a much smaller channel to save valuable panel space or can be surface mounted directly to the panel. Miniature blocks accept wire as large as #12 AWG and are available in four styles: Miniature (nylon), Miniature (polypropylene), Single Tier and Double Tier.

LR25557 E63810

Catalog 1308389
Revised 6-07

www.tycoelectronics.com

Dimensions are in millimeters and inches unless otherwise specified.

Dimensions are shown for reference purposes only. Specifications subject to change.

USA: 1-800-522-6752
Canada: 1-905-470-4425
Mexico: 01-800-733-8926
C. America: 52-55-1106-0803

South America: 55-11-2103-6000
Hong Kong: 852-2735-1628
Japan: 81-44-844-8013
UK: 8706-080-208

Note: All part numbers are RoHS Compliant.

100 Series High Density Miniature Blocks

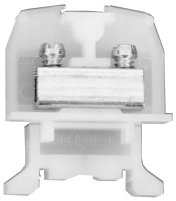

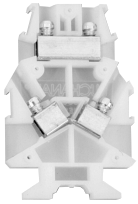

Characteristics	Miniature Nylon		Miniature Polypropylene		Single Tier		Double Tier	
Type of Block	**Model**	**Part Number**	**Model**	**Part Number**	**Model**	**Part Number**	**Model**	**Part Number**
Standard Block	125-BU	2-1437392-3	P125	4-1437392-7	115-BU	1437381-5	105-BU	1-1437392-7
Corrosion Resistant (nickel plated contacts)	D125	3-1437389-3	DP125	7-1437389-1	D115	3-1437389-2	D105	2-1437392-9
Specifications								
Housing Material	Nylon	—	Polypropylene	—	Nylon	—	Nylon	—
Max. Service Temperature	125˚C (257˚F)	—	105˚C (221˚F)	—	125˚C (257˚F)	—	125˚C (257˚F)	—
Flammability	UL94V-2	—	UL94V-0	—	UL94V-2	—	UL94V-2	—
Wire Strip Length (in.)	5/16	—	5/16	—	5/16	—	5/16	—
Torque, in-lbs.	6-9	—	6-9	—	6-9	—	6-9	—
Electrical Characteristics								
UL Rating	20 A @ 300V	—	20 A @ 300V	—	20 A @ 600V	—	20 A @ 600V	—
Wire Range (solid & stranded)	30-12	—	30-12	—	30-12	—	30-12	—
Spacing								
Pitch	0.25"	—	0.25"	—	0.25"	—	0.24"	—
Terminals per Foot	48	—	48	—	48	—	102	—
Accessories								
End Section (gray)	130-BU	2-1437392-5	P130	4-1437392-9	120	2-1437392-1	110-BU	1-1437392-8
Jumper, 2 pole	10	1437381-1	10	1437381-1	10	1437381-1	—	—
Jumper, 10 pole	—	—	—	—	—	—	J10	3-1437392-1
Jumper, Inter-tier	—	—	—	—	—	—	J2-BU	3-1437392-2
Mounting Channel								
Miniature (3ft)	12	1437381-8	12	1437381-8	12	1437381-8	—	—
Steel, Zinc plated (6ft)	—	—	—	—	60	9-1437381-1	60	9-1437381-1
Steel, Zinc plated (3ft)	—	—	—	—	63-BU	9-1437381-8	63-BU	9-1437381-8
Breakaway, steel	—	—	—	—	60B36	9-1437381-2	60B36	9-1437381-2
Pre-punched aluminum (6ft)	—	—	—	—	64	9-1437381-9	64	9-1437381-9
Pre-punched aluminum (3ft)	—	—	—	—	67	1437382-2	67	1437382-2
Channel Clamps								
Miniature (use w/#12 channel)	11	1437381-4	11	1437381-4	11	1437381-4	—	—
Universal	—	—	—	—	68	1437382-3	68	1437382-3

LR25557 E63810

Dimensions are in millimeters and inches unless otherwise specified.

Dimensions are shown for reference purposes only. Specifications subject to change.

USA: 1-800-522-6752
Canada: 1-905-470-4425
Mexico: 01-800-733-8926
C. America: 52-55-1106-0803

South America: 55-11-2103-6000
Hong Kong: 852-2735-1628
Japan: 81-44-844-8013
UK: 8706-080-208

Note: All part numbers are RoHS Compliant.

100 Series High Density Miniature Blocks Accessories

Channel Clamps

Marking Accessories

Screw Steel Channel	Universal	Snap-in	Miniature for #12 Channel	See-thru Cover	Ganging Rod	Miniature Vinyl Marking Strips	Elevated Marking Strip	Nylon Holding Plug
Part Number								
9-1437381-5	1437382-3	9-1437381-7	1437381-4	1-1437381-0	1-1437381-1	1-1437381-2	4-1437381-1	1-1437381-3
Catalog Number								
61	68	62	11	13	14	15	52-BU	16
Available For								
Single Tier Double Tier	Single Tier Double Tier	Single Tier Double Tier	Miniature Single Tier	Miniature Single Tier	Miniature Single Tier	Miniature Single Tier Double Tier	Miniature Single Tier Double Tier	Miniature Single Tier
Standard Length								
—	—	—	—	—	2 feet	25 feet	18 inches	—

Factory Assembled Blocks

Description	Direct Mount	Channel Mount
Miniature (nylon)	125xx	0125xx
	D125xx (nickel)	D0125xx (nickel)
Single Tier (nylon)	115xx	0115xx
	D115xx (nickel)	D0115xx (nickel)
Double Tier (nylon)	105xx	0105xx
	D105xx (nickel)	D0105xx (nickel)
Miniature (polypropylene)	P125xx	P0125xx
	DP125xx (nickel)	DP0125xx (nickel)

Note: xx = number of blocks desired. For factory assembled blocks with removable marking strip, add "-1" to Catalog Number. Minimum order quantities may apply.

Related Product Data

Wire Pins and Ferrules—Pages 109-111
For more information on AMP Standard Terminals and Splices or Quick-Connect FASTON Receptacles and Tabs, request Catalog 82042.

LR25557 E63810

Catalog 1308389
Revised 6-07

www.tycoelectronics.com

Dimensions are in millimeters and inches unless otherwise specified.

Dimensions are shown for reference purposes only. Specifications subject to change.

USA: 1-800-522-6752
Canada: 1-905-470-4425
Mexico: 01-800-733-8926
C. America: 52-55-1106-0803

South America: 55-11-2103-6000
Hong Kong: 852-2735-1628
Japan: 81-44-844-8013
UK: 8706-080-208

Note: All part numbers are RoHS Compliant.

Miniature Blocks

Miniature

C = .29 [7.37] + (.25 [6.35] X N)

L = .51 [12.95] + (.25 [6.35] X N)

On Miniature Channel:

CCH = 1.00 [25.4] + (.25 [6.35] X A)

LCH = 1.35 [34.29] + (.25 [6.35] X A)

A = N when N is even

A = N + 1 when N is Odd

N = No. of Miniature Sections

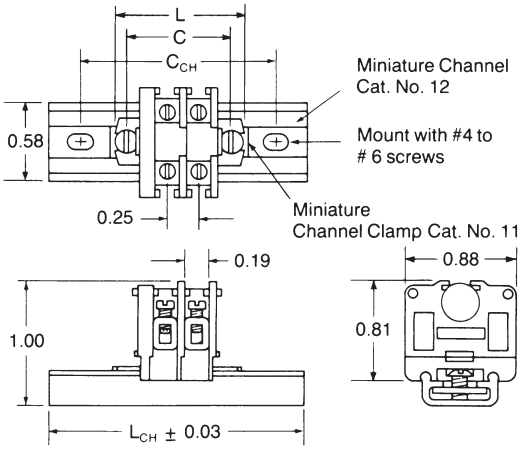

Single Tier

C = .35 [8.89] + (.25 [6.35] X N)

L = .50 [12.7] + (.25 [6.35] X N)

On Standard Channel:

C_{CH} = 2.00 [50.8] + (.25 [6.35] X N)

L_{CH} = 2.75 [69.85] + (.25 [6.35] X N)

N = No. of Single Tier Sections

On Miniature Channel:

C_{CH} = 1.00 [25.4] + (.25 [6.35] X A)

L_{CH} = 1.35 [34.29] + (.25 [6.35] X A)

A = N when N is Even

A = N + 1 when N is Odd

N = No. of Single Tier Sections

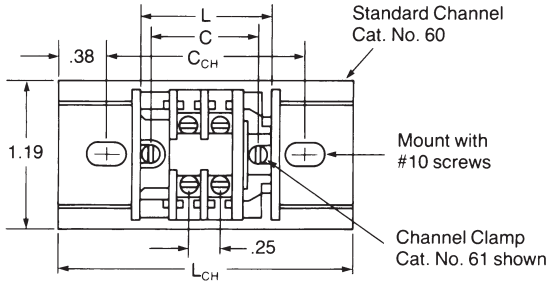

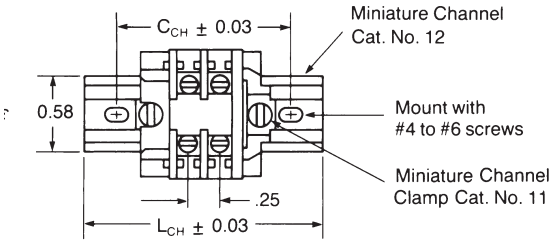

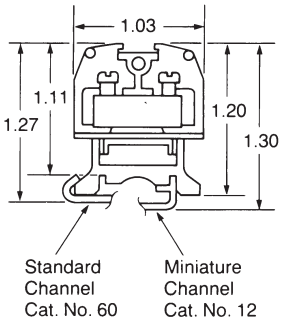

Double Tier

L = .08 [2.03] + (.24 [6.10] X N)

On Miniature Channel:

C_{CH} = 1.58 [2.03] + (.24 [6.10] X A)

L_{CH} = 2.33 [59.18] + (.24 [6.10] X A)

N = No. of Double Tier Sections

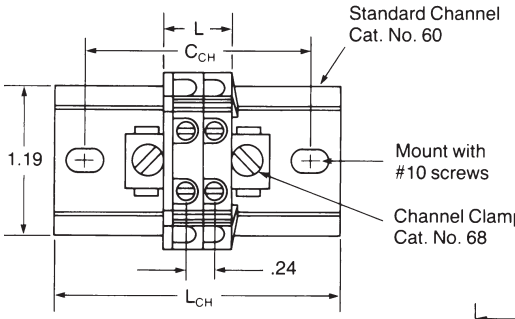

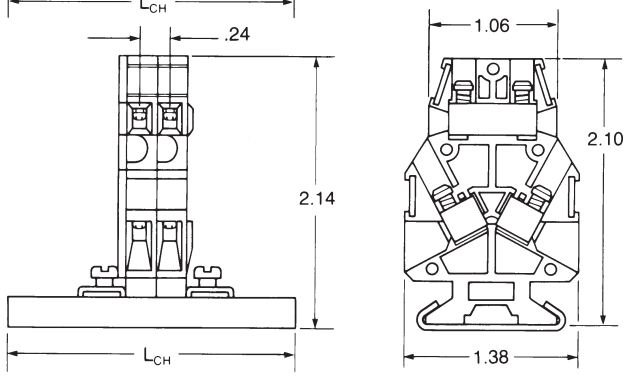

Note: All part numbers are RoHS Compliant.

900 Series, Medium Duty

Product Facts

- **High circuit density - 183 circuits per 6-foot length, 3/8 inch pitch.**
- **Choice of five contact styles - tubular clamp, tubular screw, strap screw, quick connect and tubular screw quick connect.**
- **Sections snap-fit with Heavy Duty, Intermediate Heavy Duty, and Fuse & Switch blocks.**
- **Readily identify circuits - mark directly on block sections or use removable marking strip. Preprinted marking strips also available.**
- **Rated up to 50 amperes per circuit.**
- **Flat base models mount directly to surfaces or on miniature channel. Dovetail base mounts on standard size channel.**
- **Packaged for rapid handling and assembly - 100 per carton.**
- **Only one end section needed per block assembly.**
- **Fanning strips - interlocking sectional fanning strips allow entire circuit groups to be connected and disconnected as a single unit.**
- **Factory assembled blocks available, including marking strips and different contact sections.**

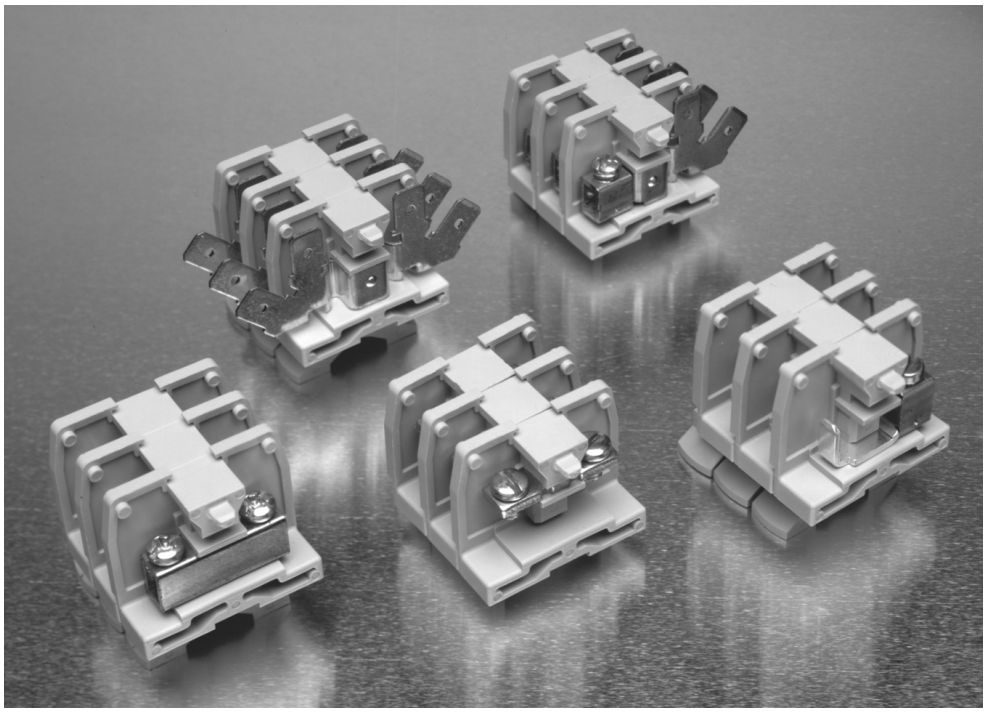

NEMA 900 Series is available in .375” [9.53] centerline, in direct or channel mount, tubular or strap versions, and screw, clamp or quick connect configurations. Corrosion-resistant versions are also available.

NEMA 900 Series snap fit with the Medium Duty 500, 600 and 700 Series, as well as with the Heavy Duty, Intermediate Heavy Duty and Fuse & Switch blocks.

Catalog 1308389
Revised 6-07

www.tycoelectronics.com

Dimensions are in millimeters and inches unless otherwise specified.

Dimensions are shown for reference purposes only. Specifications subject to change.

USA: 1-800-522-6752
Canada: 1-905-470-4425
Mexico: 01-800-733-8926
C. America: 52-55-1106-0803

South America: 55-11-2103-6000
Hong Kong: 852-2735-1628
Japan: 81-44-844-8013
UK: 8706-080-208

Note: All part numbers are RoHS Compliant.

900 Series, 600V Medium Duty, 0.375" [9.53] Pitch

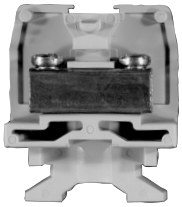
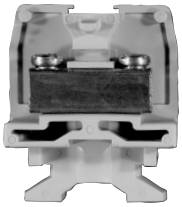
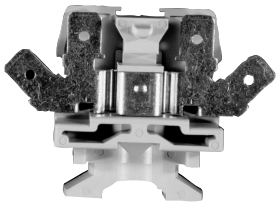

Characteristics	Strap Screw		Tubular Screw		Tubular Clamp		Quick Connect	
Type of Block	**Model**	**Part Number**	**Model**	**Part Number**	**Model**	**Part Number**	**Model**	**Part Number**
Direct Mount (Flat Base)								
Standard	921	1546143-1	924	1546147-1	925	1546234-1	927	1546149-1
Corrosion Resistant (Duramax)	D921	1546143-2	D924	1546147-2	D925	1546234-2	—	
Channel Mount (Dovetail Base)								
Standard	0921	1546144-1	0924	1546148-1	0925	1546235-1	0927	1546150-1
(Duramax)	D0921	1546144-2	D0924	1546148-2	D0925	1546235-2	—	
Contact Type								
Specifications							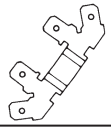	
Wire Range (AWG) Solid & Stranded	10*, 22-14		22-8		22-8		—	
Wire Strip Length (in.)	—		11/32		11/32		—	
Screw Type	6-32 Binding Head		10-32 Pan Head		10-32 Slotted Pan Head		—	
Ampacity	35 A*, 15A		50 A		30 A		20 A	
End Sections								
Direct Mount	930	1546163-1	930	1546163-1	930	1546163-1	930	1546163-1
Channel Mount	0930	1546164-1	0930	1546164-1	0930	1546164-1	0930	1546164-1

*Acceptable for 35A max. factory wiring only when used with 10AWG wire preterminated with suitable ring tongue terminals.
Note: Standard package is 100 pieces for contact, 25 pieces for end section.

Comparison (Type of Block)

Direct Mount (Flat Base)

Channel Mount (Dovetail Base)

Dimensions are in millimeters and inches unless otherwise specified.

Dimensions are shown for reference purposes only. Specifications subject to change.

USA: 1-800-522-6752
Canada: 1-905-470-4425
Mexico: 01-800-733-8926
C. America: 52-55-1106-0803

South America: 55-11-2103-6000
Hong Kong: 852-2735-1628
Japan: 81-44-844-8013
UK: 8706-080-208

Note: All part numbers are RoHS Compliant.

900 Series, 600V Medium Duty, 0.375" [9.53] Pitch (Continued)

Independent Testing Service Listing and Recognition

WIRE SIZES, Solid or Stranded
Tubular Screw
1 #18 AWG to 1 #8 AWG,
2 or 3 #12 AWG, 2 to 4 #14 AWG,
2 or 4 #16 AWG, 2 to 5 #18 AWG,
Tubular Clamp
1 #22 AWG to 1 #10 AWG,
2 #12 AWG, 2 or 3 #14 AWG,
2 to 4 #16 AWG, 2 to 5 #18 AWG,
2 to 8 #20 AWG, 2 to 10 #22 AWG,
Strap Clamp
1 #22 AWG to 1 #10 AWG

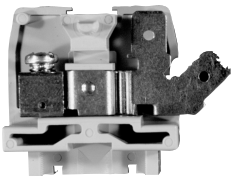

Tubular Screw & Quick Connect

Tubular Clamp with Blade

Tubular Clamp with Cantilever

Model	Part Number	Model	Part Number	Model	Part Number
929	1546151-1	—		—	
—		—		—	
0929	1546152-1	BP035M	3-1437394-6	BP35F	3-1437394-7
—		—		—	

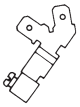

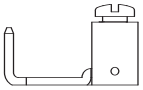

18-12	22-10	22-10
—	11/32	11/32
—	10-32 Phil-slot	10-32 Phil-slot
20 A	30 A	30 A

930	1546163-1	—		—	
0930	1546164-1	0930	1546164-1	—	

Catalog 1308389
Revised 6-07

www.tycoelectronics.com

Dimensions are in millimeters and inches unless otherwise specified.

Dimensions are shown for reference purposes only. Specifications subject to change.

USA: 1-800-522-6752
Canada: 1-905-470-4425
Mexico: 01-800-733-8926
C. America: 52-55-1106-0803

South America: 55-11-2103-6000
Hong Kong: 852-2735-1628
Japan: 81-44-844-8013
UK: 8706-080-208

Note: All part numbers are RoHS Compliant.

ERT Series, Medium Duty Radiation Resistant

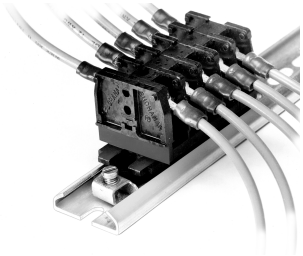

Physical Properties

Effect of Radiation on Physical Properties

The effects of radiation (neutron and gamma particles) on RYTON R-4 material have been studied. Since RYTON, as an engineering plastic, may fill applications in nuclear installations these effects are important. The test results show no effects on physical properties by these relatively high exposures to gamma and neutron radiation. There is no indication from these data of crosslinking or degradation of the RYTON R-4 material.

Note: Determination of the suitability of the ERT Series Blocks for particular applications rests solely with customers.

DOVETAIL BASE MOUNTED ON STANDARD #60 CHANNEL

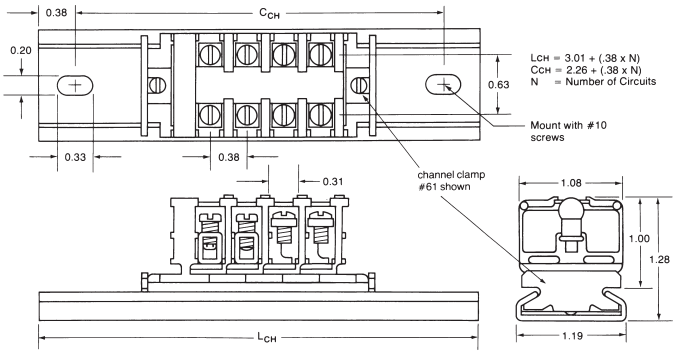

Description	Catalog Number	Part Number
Strap Screw	0721ERT	1437394-9
Tubular Clamp	0725ERT	1-1437394-6
Tubular Screw	0724ERT	1-1437394-1
End Section	0730ERT	2-1437394-0

Housing: RYTON (Polyphenylene Sulfide)		ASTM Test
Density	100 lbs./ft.3	D1505-68
Tensile Strength	19,500 psi	D638-72
Elongation	1.3%	D638-72
Flexural Modulus	1,700,000 psi	D790-91
Flexural Strength	29,000 psi	D790-91
Compressive Strength	21,000 psi	D695-69
Izod Impact Strength		
Unnotched, 1/8" Specimen	8.0 ft. lbs./in.	
Notched, 1/8" Specimen	1.4 ft. lbs./in.	
Rockwell Hardness	R-123	D785-65
Water Absorption	0.05%	D570-63
Heat Distortion Temp. @ 264 psi	500˚F	D648-72
Specific Heat, 24 hrs. @ 25˚C	0.25 btu/lb./˚F	
Thermal Conductivity	2.0 btu-in./h-ft.2 F	
Coefficient/Linear Thermal Exp.	2.5 x 10-5 in./in./˚ F	
Flammability, UL 94	V-0	
Dielectric Strength	350 volts/mil	D149-64
Dielectric Constant, 25˚C 1 kHz	3.9	D150-70
1MHz	3.8	
Dissipation Factor, 25˚C 1kHz	0.0010	D150-70
1MHz	0.0013	
Conditions	**In Reactor Core**	**In Water Pool**
Temperature	35˚C	30˚C
Radiation	Mainly neutrons	Mainly gamma
Intensity	1010 ergs g-1 (C)	109 ergs g-1 (C)
Used Particle Detectors	Calorimeter and activation detectors	Ionization chamber
Radiation Dose	**Flexural Strength psi**	**Modulus of Elasticity, psi**
0	28,700	1,900,000
A. Neutron		
5 x 10 rad	29,000	1,910,000
1 x 10 rad	28,900	1,880,000
B. Gamma		
5 x 10 rad	29,700	1,810,000
1 x 10 rad	30,200	1,840,000
5 x 10 rad	28,500	1,820,000

RYTON is a registered trademark of Chevron Phillips Chemical Company.

LR25557 E63810

Dimensions are in millimeters and inches unless otherwise specified.

Dimensions are shown for reference purposes only. Specifications subject to change.

USA: 1-800-522-6752
Canada: 1-905-470-4425
Mexico: 01-800-733-8926
C. America: 52-55-1106-0803

South America: 55-11-2103-6000
Hong Kong: 852-2735-1628
Japan: 81-44-844-8013
UK: 8706-080-208

Note: All part numbers are RoHS Compliant.

Medium Duty Accessories

Mounting Channel

Miniature		Steel Channel		Break Away Steel		Pre-punched Aluminum Channel	
Part Number	Catalog Number	Part Number	Catalog Number	Part Number	Catalog Number	Part Number	Catalog Number
1437381-8	12	9-1437381-1 9-1437381-8	60 63-BU	9-1437381-2	60-B-36	9-1437381-9 1437382-2	64 67
Standard Length							
3 feet		6 feet 3 feet		3 feet		6 feet 3 feet	

Channel Clamps

Screw Channel Clamps	Universal Clamps	Snap-In Clamps	Miniature for #12 Channel	See-thru Cover	Ganging Rod	Polarizing Plug
Part Number						
9-1437381-5	1437382-3	9-1437381-7	1437381-4	1-1437382-2	3-1437381-9	2-1437382-5
Catalog Number						
61	68	62	11	71	30-BU	84
Standard Length						
—	—	—	—	—	2 feet	—

Jumpers

	Jumper for tubular Contacts	Snap-apart for Tubular Contacts
Part Number		
	1437382-6	1-1437382-3
Catalog Number		
	70	73

Related Product Data

Wire Pins and Ferrules—Pages 109-111
For more information on AMP Standard Terminals and Splices or Quick-Connect FASTON Receptacles and Tabs, request Catalog 82042.

Dimensions are in millimeters and inches unless otherwise specified.

Dimensions are shown for reference purposes only. Specifications subject to change.

USA: 1-800-522-6752
Canada: 1-905-470-4425
Mexico: 01-800-733-8926
C. America: 52-55-1106-0803

South America: 55-11-2103-6000
Hong Kong: 852-2735-1628
Japan: 81-44-844-8013
UK: 8706-080-208

Note: All part numbers are RoHS Compliant.

Medium Duty Accessories (Continued)

Marking Accessories

Plastic Cloth Tape	Plastic Cloth Tape	Vinyl Marking Strips	Elevated Marking Strip	Nylon Holding Plug
Part Number				
1437382-1	8-1437381-0	6-1437381-3	4-1437391-1	4-1437393-0
Catalog Number				
66	55-BU	50-BU	52-BU	65-BU
Standard Length				
—	50 feet	25 feet	18 inches	—

Sectional Fanning Strips

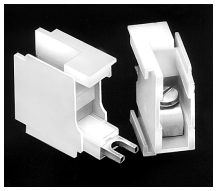

Strap Screw

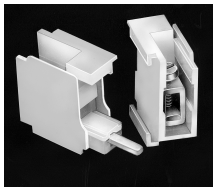

Tubular Screw

Description	Standard Package	Part No.	Catalog No.
Tubular Screw	50	1-1437382-4	74
Strap Screw	50	1-1437382-7	78-TB
Molding Only, no contact	50	4-1437393-1	74100

Dimensions are in millimeters and inches unless otherwise specified.

Dimensions are shown for reference purposes only. Specifications subject to change.

USA: 1-800-522-6752
Canada: 1-905-470-4425
Mexico: 01-800-733-8926
C. America: 52-55-1106-0803

South America: 55-11-2103-6000
Hong Kong: 852-2735-1628
Japan: 81-44-844-8013
UK: 8706-080-208

Note: All part numbers are RoHS Compliant.

Medium Duty Channel Mount

Dovetail Base Mounted On Standard #60 Channel

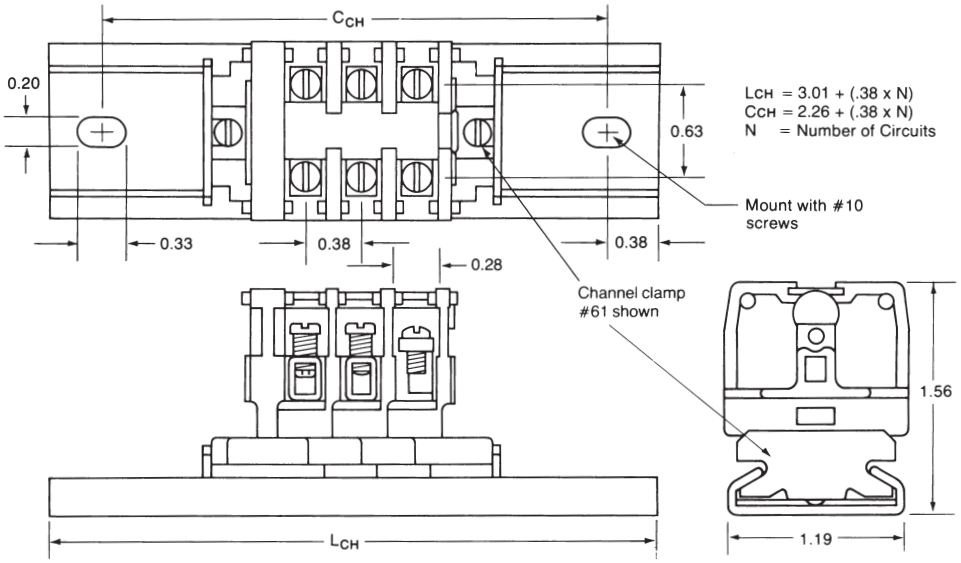

Flat Base Mounted On Miniature #12 Channel

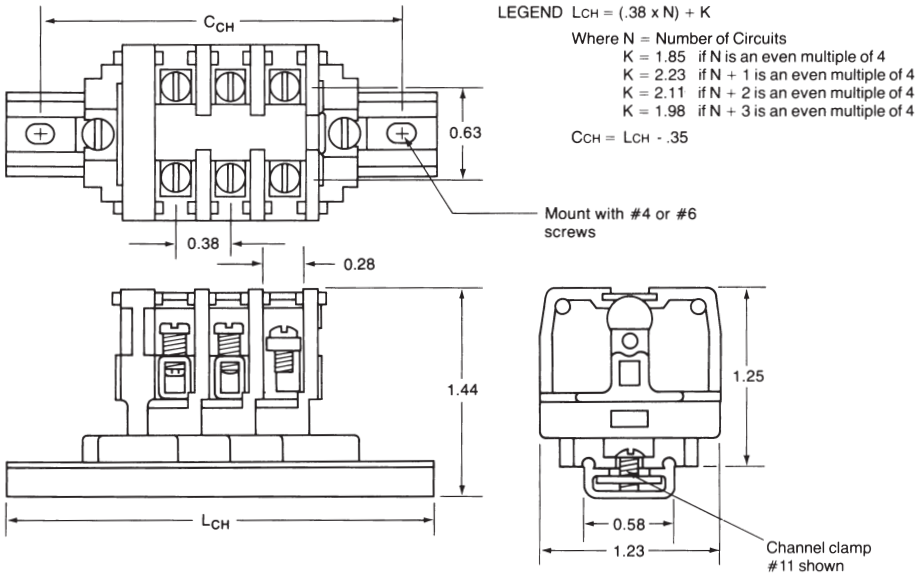

Catalog 1308389
Revised 6-07
www.tycoelectronics.com

Dimensions are in millimeters and inches unless otherwise specified.

Dimensions are shown for reference purposes only. Specifications subject to change.

USA: 1-800-522-6752
Canada: 1-905-470-4425
Mexico: 01-800-733-8926
C. America: 52-55-1106-0803
South America: 55-11-2103-6000
Hong Kong: 852-2735-1628
Japan: 81-44-844-8013
UK: 8706-080-208

Note: All part numbers are RoHS Compliant.

900 Series, Flat Base

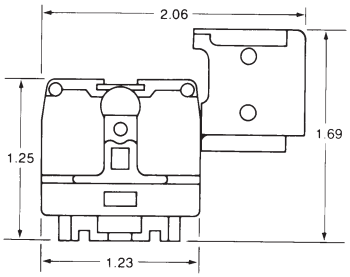

Strap Screw
Fanning Strip

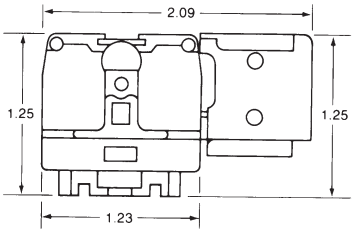

Tubular Screw
Fanning Strip

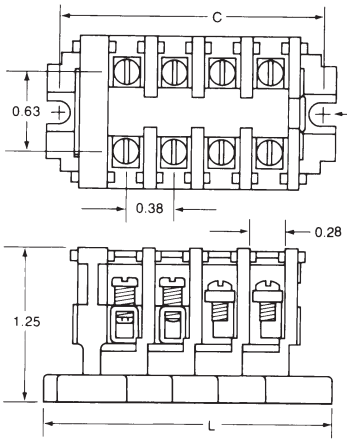

L = .76 + (.38 x N)
C = .54 + (.38 x N)
N = Number of Circuits

Mount with #8 round head machine screws every 12 circuits.

Shown with #65-BU nylon holding plug

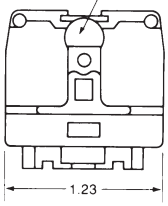

Dimensions are in millimeters and inches unless otherwise specified.

Dimensions are shown for reference purposes only. Specifications subject to change.

USA: 1-800-522-6752
Canada: 1-905-470-4425
Mexico: 01-800-733-8926
C. America: 52-55-1106-0803

South America: 55-11-2103-6000
Hong Kong: 852-2735-1628
Japan: 81-44-844-8013
UK: 8706-080-208

Note: All part numbers are RoHS Compliant.

BP Series, Plug-in Blocks

Dovetail Base Mounted On Standard #60 Channel

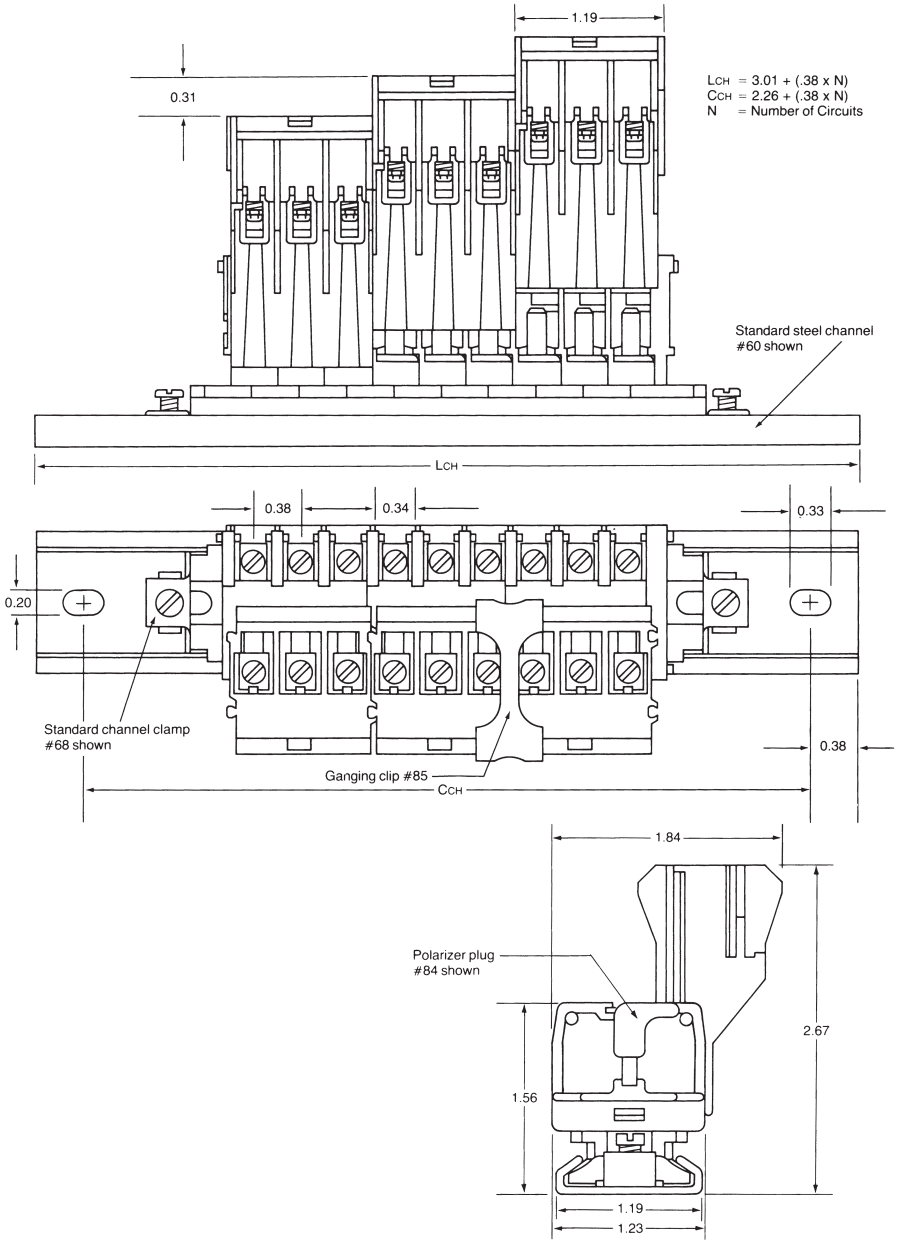

Catalog 1308389
Revised 6-07
www.tycoelectronics.com

Dimensions are in millimeters and inches unless otherwise specified.

Dimensions are shown for reference purposes only. Specifications subject to change.

USA: 1-800-522-6752
Canada: 1-905-470-4425
Mexico: 01-800-733-8926
C. America: 52-55-1106-0803
South America: 55-11-2103-6000
Hong Kong: 852-2735-1628
Japan: 81-44-844-8013
UK: 8706-080-208

Note: All part numbers are RoHS Compliant.

Engineering Notes

Catalog 1308389
Revised 6-07

www.tycoelectronics.com

Dimensions are in millimeters and inches unless otherwise specified.

Dimensions are shown for reference purposes only. Specifications subject to change.

USA: 1-800-522-6752
Canada: 1-905-470-4425
Mexico: 01-800-733-8926
C. America: 52-55-1106-0803

South America: 55-11-2103-6000
Hong Kong: 852-2735-1628
Japan: 81-44-844-8013
UK: 8706-080-208

Note: All part numbers are RoHS Compliant.

200 Series Heavy Duty

Product Facts

- **Choose from 5 different contact styles.**
- **600 volt UL and NEMA rating.**
- **Conservatively rated from 50 to 90 amperes per circuit, depending on which contact style is selected.**
- **Choose any of three mounting methods — two-way flat base models surface mount directly to the panel or snap-on miniature channel. Dovetail base models mount on standard channel.**
- **Packaged for rapid handling and assembly — snap-fit sections are packed 10 per carton.**
- **Only one end section needed per block assembly.**
- **Readily identify circuits — mark directly on block sections or use removable marking strip. Pre-printed strips are also available.**

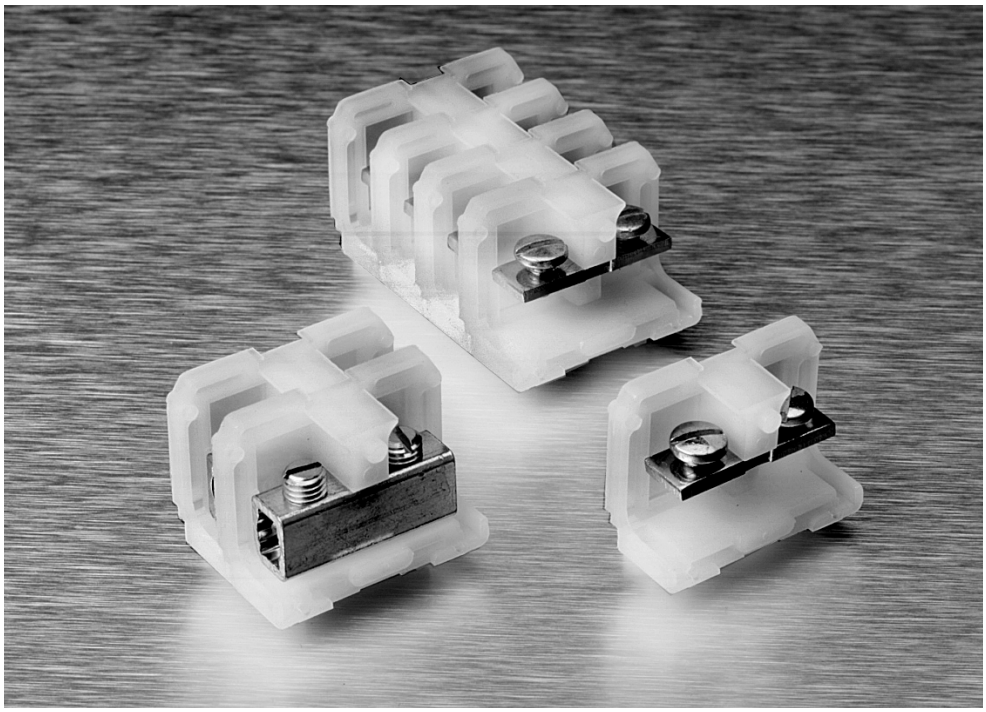

This compact, heavy duty block line accepts single or combination wires up to #4 AWG, solid or stranded. The compact design allows at least 138 circuits per 6-foot length to be mounted. The pitch of this 600 volt block is 0.50" [12.70] (centerline spacing).

LR25557 E63810

Catalog 1308389
Revised 6-07

www.tycoelectronics.com

Dimensions are in millimeters and inches unless otherwise specified.

Dimensions are shown for reference purposes only. Specifications subject to change.

USA: 1-800-522-6752
Canada: 1-905-470-4425
Mexico: 01-800-733-8926
C. America: 52-55-1106-0803

South America: 55-11-2103-6000
Hong Kong: 852-2735-1628
Japan: 81-44-844-8013
UK: 8706-080-208

Note: All part numbers are RoHS Compliant.

200 Series, Heavy Duty, 600V, 0.50” [1.27] Pitch

Characteristics	Strap Screw		Strap Clamp		Tubular Screw		Tubular Clamp	
Type of Block	**Model**	**Part Number**	**Model**	**Part Number**	**Model**	**Part Number**	**Model**	**Part Number**
Direct Mount (Flat Base) Nylon, Unpainted	241	3-1437390-9	248	4-1437390-2	242	4-1437390-0	243	4-1437390-1
Polypropylene	P241	6-1437390-5	P248	6-1437390-8	P242	6-1437390-6	P243	6-1437390-7
Channel Mount (Dovetail Base) Nylon, Painted	0241	1-1437390-6	0248	2-1437390-4	0242	2-1437390-0	0243	2-1437390-1
Polypropylene	P0241	5-1437390-9	P0248	6-1437390-3	P0242	6-1437390-0	P0243-BU	6-1437390-2
Contact Type								
Specifications								
Wire Range (AWG) Solid & Stranded	22-10		18-8		18-4		18-6	
Wire Strip Length (in.)	—		1/2		1/2		1/2	
Screw Type	10-32 binding head		8-32 pan head		1/4-28 set screw		1/4-28 set screw	
Ampacity	35 A		50 A		85 A		65 A	
End Sections								
Direct Mount, Nylon	250	4-1437390-3	250	4-1437390-3	250	4-1437390-3	250	4-1437390-3
Direct Mount, Polypropylene	P250	6-1437390-6	P250	6-1437390-6	P250	6-1437390-6	P250	6-1437390-6
Channel Mount, Nylon	0250	2-1437390-5	0250	2-1437390-5	0250	2-1437390-5	0250	2-1437390-5
Channel Mount, Polypropylene	P0250	6-1437390-4	P0250	6-1437390-4	P0250	6-1437390-4	P0250	6-1437390-4

Notes:
For factory assembled blocks, suffix Catalog Number with number of blocks desired. See page 264-266 for dimensions and other details.
(Maximum number of flat base preassembled sections is 12).
Example: Ten tubular clamp, dovetail based sections, preassembled on channel = 024310

Example: Twelve polypropylene strap clamp flat base sections = P24812

For unpainted factory assembled blocks supplied with a removable marking strip add — 1 to Catalog Number.

For blocks with two or more different contact sections, imprinted marking strips, or special features, consult Technical Support.

Comparison (Type of Block)

Direct Mount (Flat Base)

Channel Mount (Dovetail Base)

LR25557 E63810

Dimensions are in millimeters and inches unless otherwise specified.

Dimensions are shown for reference purposes only. Specifications subject to change.

USA: 1-800-522-6752
Canada: 1-905-470-4425
Mexico: 01-800-733-8926
C. America: 52-55-1106-0803

South America: 55-11-2103-6000
Hong Kong: 852-2735-1628
Japan: 81-44-844-8013
UK: 8706-080-208

Note: All part numbers are RoHS Compliant.

200 Series, Heavy Duty, 600V, 0.50” [1.27] Pitch (Continued)

Corrosion Resistant Strap Screw		Corrosion Resistant Tubular Screw	
Model	**Part Number**	**Model**	**Part Number**
D241	4-1437389-0	D242	4-1437389-1
DP241	1776721-1	DP242	1776723-1
D0241	1776722-1	D0242	1776724-1
DP0241	6-1437389-0	DP0242	1776724-2
22-10		18-4	
—		1/2	
10-32 Nickel plated binding head		1/4-28 Nickel plated set screw	
35 A		85 A	
250	4-1437390-3	250	4-1437390-3
P250	6-1437390-6	P250	6-1437390-6
0250	2-1437390-5	0250	2-1437390-5
P0250	6-1437390-4	P0250	6-1437390-4

LR25557 E63810

Dimensions are in millimeters and inches unless otherwise specified.

Dimensions are shown for reference purposes only. Specifications subject to change.

USA: 1-800-522-6752
Canada: 1-905-470-4425
Mexico: 01-800-733-8926
C. America: 52-55-1106-0803

South America: 55-11-2103-6000
Hong Kong: 852-2735-1628
Japan: 81-44-844-8013
UK: 8706-080-208

Note: All part numbers are RoHS Compliant.

200 Series Heavy Duty Accessories

Mounting Channel

Miniature		Steel Channel		Break Away Steel		Pre-punched Aluminum Channel	
Part Number	Catalog Number	Part Number	Catalog Number	Part Number	Catalog Number	Part Number	Catalog Number
1437381-8	12	9-1437381-1 9-1437381-8	60 63-BU	9-1437381-2	60-B-36	9-1437381-9 1437382-2	64 67
Standard Length							
3 feet		6 feet 3 feet		3 feet		6 feet 3 feet	

Channel Clamps

Screw Channel Clamps	Universal Clamps	Snap-In Clamps	Miniature for #12 Channel	See-thru Cover	Ganging Rod
Part Number					
9-1437381-5	1437382-3	9-1437381-7	1437381-4	1-1437381-6	3-1437381-9
Catalog Number					
61	68	62	11	23-BU	30-BU
Standard Length					
—	—	—	—	—	2 feet

Marking Accessories

Jumpers

Plastic Cloth Tape	Plastic Cloth Tape	Vinyl Marking Strips	Elevated Marking Strip	Nylon Holding Plug	Jumper for Tubular Contacts	Snap-Apart for Tubular Contacts
Part Number						
8-1437381-1	8-1437381-0	6-1437381-3	4-1437391-1	4-1437393-0	2-1437393-4	1-1437382-5
Catalog Number						
56	55-BU	50-BU	52-BU	65-BU	42-BU	75
Standard Length						
—	50 feet	25 feet	18 inches	—	—	12 ckt

Related Product Data

Wire Pins and Ferrules—Pages 109-111
For more information on AMP Standard Terminals and Splices or Quick-Connect FASTON Receptacles and Tabs, request Catalog 82042.

LR25557 E63810

Dimensions are in millimeters and inches unless otherwise specified.

Dimensions are shown for reference purposes only. Specifications subject to change.

USA: 1-800-522-6752
Canada: 1-905-470-4425
Mexico: 01-800-733-8926
C. America: 52-55-1106-0803

South America: 55-11-2103-6000
Hong Kong: 852-2735-1628
Japan: 81-44-844-8013
UK: 8706-080-208

Note: All part numbers are RoHS Compliant.

200 Series Heavy Duty Specifications

Material & Finish

Voltage Rating: Blocks meet 600 volt creepage and clearance requirements of NEMA, UL and CSA for general industrial control equipment and panelboards. Withstand voltages greatly in excess of IEEE switchgear standards for 750 volts.

Ampacity: For a single #4 AWG wire the maximum amperage recommended is 85 amps.

Standard Contacts:

Material: Electrical grade copper or copper alloy conductor. Steel Screws plated to resist corrosion in most industrial applications

AL-CU Tubular Screw: Aluminum compatibility with aluminum or copper conductors. AL-CU is tin-plated brass.

Environmental Contacts (for highly corrosive atmospheres)

Tubular Screw: Electrical grade copper tube with nickel plating. Nickel plated brass screws.

Strap Screw: Nickel plated brass straps and screws. Nickel plating exceeds specification QQ-N-290 Class I, Type VII.

Nylon Housing:

Material—Nylon; Unfilled Type 6/6

Max. Continuous Temperature—125°C [257°F]

Breakdown Voltage (AC, 60 Hz)—

Contact-to-Contact: 7000V

Contact-to-Ground: 7800V

Dielectric Strength (RH 40% at Sea Level)—470-385 Volts/mil thickness Per ASTM D149

UL High Voltage Arc Tracking (inches/min.)—.01-.35

Water Absorption (24 hrs. % wt. gain)—1.5%

Flammability—UL94V-2

Chemical Resistance—Resistant to aromatic hydrocarbons, strong alkalies Per ASTM D543

Radiation Resistance (ergs g-1 (C)—8 x 107

Color—Translucent White

Independent Testing Service Listing and Recognition

WIRE SIZES, Solid or Stranded

Tubular Screw

1 #4 AWG, 1 #6 AWG,

1 or 2 #8 AWG, 1 to 4 #10 AWG,

1 or 5 #12 AWG, 1 to 4 #14 AWG,

1 or 6 #16 AWG, 1 to 8 #18 AWG,

Tubular Clamp

1 #6 AWG, 1 or 2 #8 AWG,

1 to 3 #10 AWG, 1 to 4 #12 AWG,

1 or 4 #14 AWG, 1 to 6 #16 AWG,

1 or 8 #18 AWG

Strap Clamp

1 #18 to 1 #8 AWG

Polypropylene Housing:

Material—Polypropylene; Filled self-extinguishing

Max. Continuous Temperature—105°C (221°F)

Breakdown Voltage (AC, 60Hz)—

Contact-to-Ground: 7800V

Contact-to-Contact: 7000V

Dielectric Strength (RH 40% at Sea Level)—500 Volts/mil thickness Per ASTM D149

UL High Voltage Arc Tracking (inches/min.)—Did not Track

Water Absorption (24 hrs. % wt. gain)—0.02% Per ASTM D570

Flammability—UL94V-0

Chemical Resistance—Resistant to most acids, alkalines, and saline solutions. Also resistant to higher aliphatic solvents and polar substances per ASTM D543

Radiation Resistance (ergs g-1 (C)—No data Available

Color—Opaque White

LR25557 E63810

Dimensions are in millimeters and inches unless otherwise specified.

Dimensions are shown for reference purposes only. Specifications subject to change.

USA: 1-800-522-6752
Canada: 1-905-470-4425
Mexico: 01-800-733-8926
C. America: 52-55-1106-0803

South America: 55-11-2103-6000
Hong Kong: 852-2735-1628
Japan: 81-44-844-8013
UK: 8706-080-208

Note: All part numbers are RoHS Compliant.

200 Series, 600 Volt, Direct Mount

Flat Base

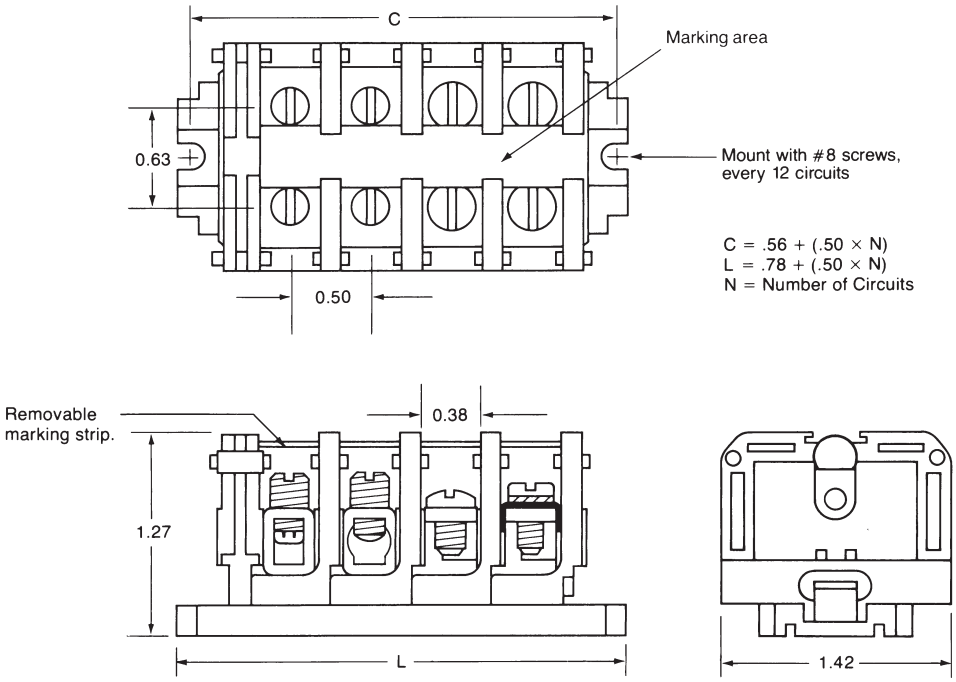

Dimensions are in millimeters and inches unless otherwise specified.

Dimensions are shown for reference purposes only. Specifications subject to change.

USA: 1-800-522-6752
Canada: 1-905-470-4425
Mexico: 01-800-733-8926
C. America: 52-55-1106-0803

South America: 55-11-2103-6000
Hong Kong: 852-2735-1628
Japan: 81-44-844-8013
UK: 8706-080-208

Note: All part numbers are RoHS Compliant.

200 Series, 600 Volt, Channel Mount

Flat Base Mounted On #12 Miniature Channel

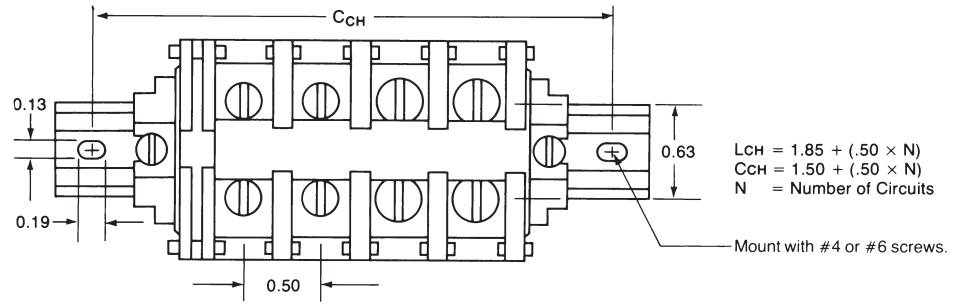

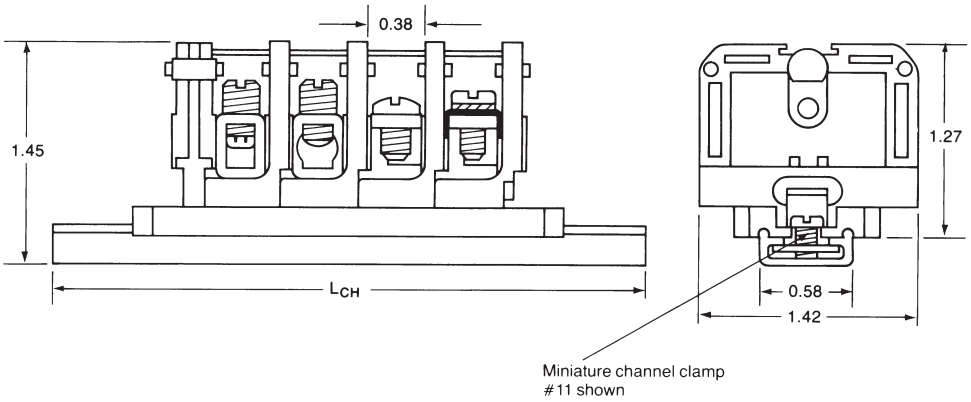

Catalog 1308389
Revised 6-07

www.tycoelectronics.com

Dimensions are in millimeters and inches unless otherwise specified.

Dimensions are shown for reference purposes only. Specifications subject to change.

USA: 1-800-522-6752
Canada: 1-905-470-4425
Mexico: 01-800-733-8926
C. America: 52-55-1106-0803

South America: 55-11-2103-6000
Hong Kong: 852-2735-1628
Japan: 81-44-844-8013
UK: 8706-080-208

Note: All part numbers are RoHS Compliant.

200 Series, 600 Volt, Channel Mount (Standard)

Dovetail Base Mounted On Standard #60 Channel

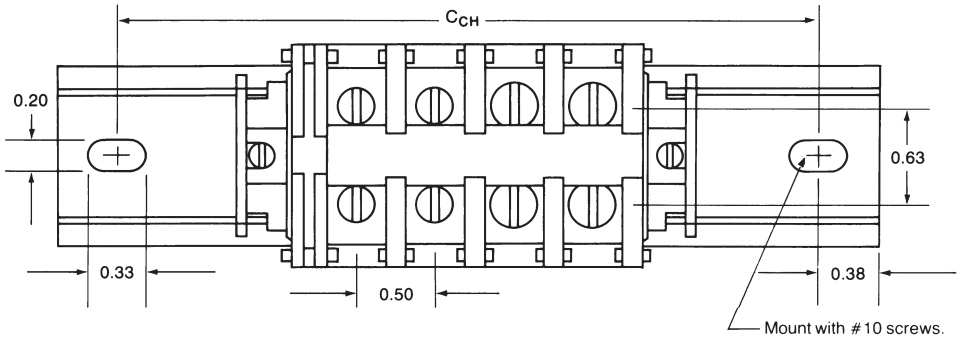

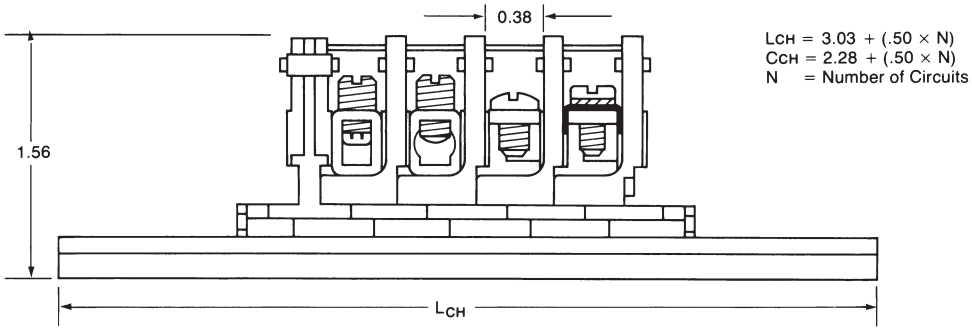

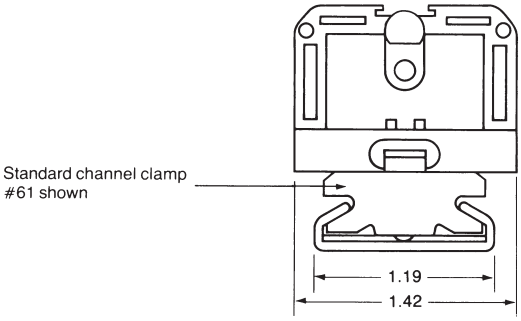

Catalog 1308389
Revised 6-07
www.tycoelectronics.com

Dimensions are in millimeters and inches unless otherwise specified.

Dimensions are shown for reference purposes only. Specifications subject to change.

USA: 1-800-522-6752
Canada: 1-905-470-4425
Mexico: 01-800-733-8926
C. America: 52-55-1106-0803
South America: 55-11-2103-6000
Hong Kong: 852-2735-1628
Japan: 81-44-844-8013
UK: 8706-080-208

Note: All part numbers are RoHS Compliant.

200 Series, Heavy Duty Phenolic Blocks

Product Facts

- **Sturdy Heavy Duty block accepts single or combinations of wire up to #4 AWG solid or stranded — at least 122 circuits per 6-foot length, 9/16" center-to-center spacing.**
- **Choose from four different contact styles conservatively rated up to 90 amperes.**
- **600 volt UL and NEMA rating.**
- **Surface mounted flat base and channel mounted dovetail base models available.**
- **Only one end section needed per block assembly.**
- **Interlocking sectional fanning strips allow entire circuit groups to be connected and disconnected as a single unit.**
- **Readily identify circuits — available with painted marking surface or use removable marking strip. Pre-printed strips are also available.**
- **Factory assembled blocks available.**
- **Heavy Duty Phenolic Block Sections Snap-fit with 300 & 600 volt, medium duty phenolic, heavy duty nylon and polypropylene, and Fuse and Switch blocks.**

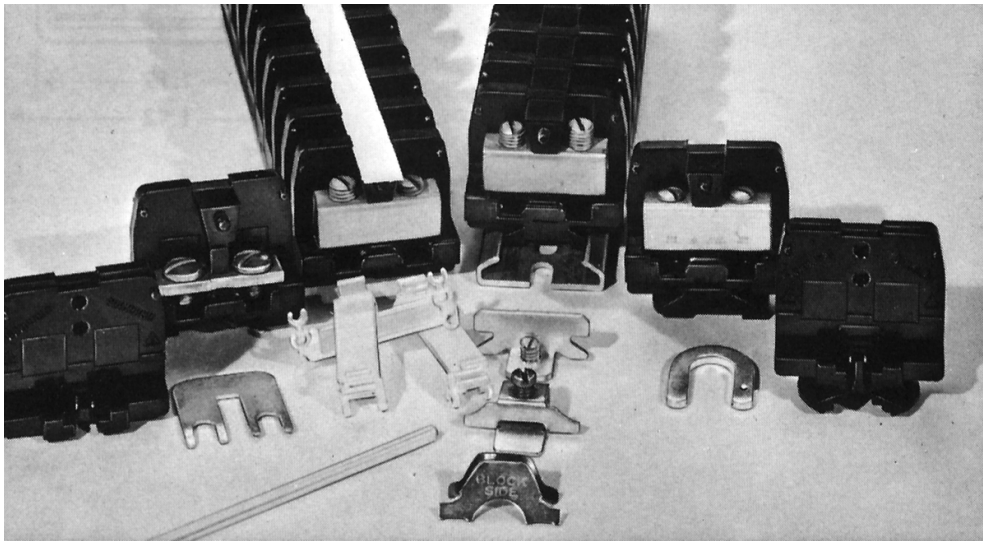

This family of phenolic heavy duty blocks is ideal for high temperature, high current applications. The rugged material withstands temperatures up to 302°F [150°C].

LR25557 E63810

Catalog 1308389
Revised 6-07

www.tycoelectronics.com

Dimensions are in millimeters and inches unless otherwise specified.

Dimensions are shown for reference purposes only. Specifications subject to change.

USA: 1-800-522-6752
Canada: 1-905-470-4425
Mexico: 01-800-733-8926
C. America: 52-55-1106-0803

South America: 55-11-2103-6000
Hong Kong: 852-2735-1628
Japan: 81-44-844-8013
UK: 8706-080-208

Note: All part numbers are RoHS Compliant.

200 Series, Heavy Duty Phenolic, 600 V, 0.56” [14.24] Pitch

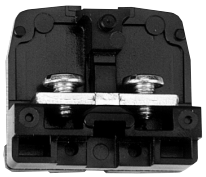

Characteristics	Strap Screw		Strap Clamp		Tubular Screw		Tubular Clamp	
Type of Block	**Model**	**Part Number**	**Model**	**Part Number**	**Model**	**Part Number**	**Model**	**Part Number**
Direct Mount (Flat Base)								
Painted	221	3-1437390-1	228-BU	1-1437381-5	222-BU	3-1437390-3	223-BU	3-1437390-6
Unpainted	211	2-1437390-7	218	3-1437390-0	212	2-1437390-8	213	2-1437390-9
Channel Mount (Dovetail Base)								
Painted	0221	1437390-8	0228	1-1437390-3	0222	1437390-9	0223	1-1437390-2
Unpainted	0211	1437390-1	0218	1437390-7	0212	1437390-3	0213	1437390-5
Contact Type								
Specifications								
Wire Range (AWG) Solid & Stranded	22-10		18-8		18-4		18-6	
Wire Strip Length (in.)	—		1/2		1/2		1/2	
Screw Type	10-32 binding head		8-32 pan head w/clamp		1/4-28 set screw		1/4-28 set screw	
Ampacity	35 A		50 A		85 A		65 A	
End Sections								
Direct Mount	230-BU	1-1437381-7	230-BU	1-1437381-7	230-BU	1-1437381-7	230-BU	1-1437381-7
Channel Mount	0230	1-1437390-4	0230	1-1437390-4	0230	1-1437390-4	0230	1-1437390-4

Notes:
For factory assembled blocks, suffix Catalog Number with number of blocks desired. See page 272 for dimensions and other details. (Maximum number of flat base preassembled sections is 12).
Example: Twenty dovetail based, tubular clamp blocks, preassembled on channel = 021320 (plain marking area)

Example: Twelve preassembled flat base, strap screw blocks = 22112 (painted marking area)

For factory assembled blocks supplied with a removable marking strip add — 1 to Catalog Number.

For blocks with two or more different contact sections, imprinted marking strips, or special features, consult
Technical Support.

Environmental contacts for highly corrosive atmospheres are available with nickel plating on non-ferrous hardware. To order, prefix Catalog # with “D”.

Comparison (Type of Block)

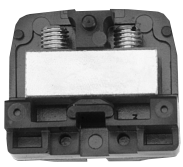

Direct Mount (Flat Base)

Channel Mount (Dovetail Base)

LR25557 E63810

Dimensions are in millimeters and inches unless otherwise specified.

Dimensions are shown for reference purposes only. Specifications subject to change.

USA: 1-800-522-6752
Canada: 1-905-470-4425
Mexico: 01-800-733-8926
C. America: 52-55-1106-0803

South America: 55-11-2103-6000
Hong Kong: 852-2735-1628
Japan: 81-44-844-8013
UK: 8706-080-208

Note: All part numbers are RoHS Compliant.

200 Series, Heavy Duty Phenolic, 600 V, 0.56” [14.24] Pitch (Continued)

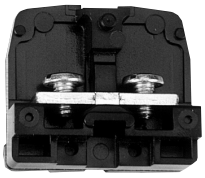

Corrosion Resistant Strap Screw

Model	Part Number
D221	3-1437389-6
D211	3-1437389-4
D0221	1437389-7
D0211	1437389-2

Contact Type

Specifications

22-10
—
10-32 Nickel plated binding head
35 A
230-BU 1-1437381-7
0230 1-1437390-4

Corrosion Resistant Tubular Screw

Model	Part Number
D222	3-1437389-8
D212	3-1437389-5
D0222	1437389-8
D0212	1437389-4

18-4
1/2
1/4-28 Nickel plated set screw
85 A
230-BU 1-1437381-7
0230 1-1437390-4

Corrosion Resistant Tubular Clamp

Model	Part Number
D223	3-1437389-9
D213	4-1437390-6
D0223	1437389-9
D0213	1437389-6

22-10
1/2
1/4-28 Nickel plated set screw
65 A
230-BU 1-1437381-7
0230 1-1437390-4

Sectional Fanning Strips

Description	Part No.	Catalog No.
Tubular Screw	1-1437381-8	24
Strap Screw	1-1437381-9	27
Molding Only, no contact	1447889-1	2400

Note:
For factory assembled fanning strips, suffix Catalog Number with number desired.
Example: Ten factory assembled sections of #24 = 2410

LR25557 E63810

Catalog 1308389
Revised 6-07

www.tycoelectronics.com

Dimensions are in millimeters and inches unless otherwise specified.

Dimensions are shown for reference purposes only. Specifications subject to change.

USA: 1-800-522-6752
Canada: 1-905-470-4425
Mexico: 01-800-733-8926
C. America: 52-55-1106-0803

South America: 55-11-2103-6000
Hong Kong: 852-2735-1628
Japan: 81-44-844-8013
UK: 8706-080-208

Note: All part numbers are RoHS Compliant.

200 Series, Heavy Duty Phenolic Accessories

Mounting Channel

Channel Clamps

Steel Channel	Break Away Steel	Pre-punched Aluminum Channel	Screw Channel Clamps	Universal Clamps	Snap-In Clamps	See-thru Cover	Ganging Rod
Part Number							
9-1437381-1 9-1437381-8	9-1437381-2	9-1437381-9 1437382-2	9-1437381-5	1437382-3	9-1437381-7	1-1437382-2	3-1437381-9
Catalog Number							
60 63-BU	60-B-36	64 67	61	68	62	23-BU	30-BU
Standard Length							
6 feet 3 feet	3 feet	6 feet 3 feet	—	—	—	—	2 feet

Marking Accessories

Jumpers

Plastic Cloth Tape	Plastic Cloth Tape	Vinyl Marking Strips	Elevated Marking Strip	Nylon Holding Plug	Jumper for Tubular Contacts	Jumper for Strap Screw
Part Number						
8-1437381-1	8-1437381-0	6-1437381-3	4-1437391-1	4-1437393-0	2-1437393-3	5-1437381-5
Catalog Number						
56	55-BU	50-BU	52-BU	65-BU	41-BU	43
Standard Length						
10 sheets	50 feet	25 feet	18 inches	—	—	—

Related Product Data

Wire Pins and Ferrules—Pages 109-111
For more information on AMP Standard Terminals and Splices or Quick-Connect FASTON Receptacles and Tabs, request Catalog 82042.

Dimensions are in millimeters and inches unless otherwise specified.

Dimensions are shown for reference purposes only. Specifications subject to change.

USA: 1-800-522-6752
Canada: 1-905-470-4425
Mexico: 01-800-733-8926
C. America: 52-55-1106-0803

South America: 55-11-2103-6000
Hong Kong: 852-2735-1628
Japan: 81-44-844-8013
UK: 8706-080-208

Note: All part numbers are RoHS Compliant.

200 Series, Heavy Duty Phenolic Specifications

Material & Finish

Standard Contacts

Material: Electrical grade copper or copper alloy conductor. Steel Screws plated to resist corrosion in most industrial applications.

Environmental Contacts (for highly corrosive atmospheres)

Tubular Screw: - Electrical grade copper tube with nickel plating.

Nickel plated brass screws.

Strap Screw: - Nickel plated brass straps and screws

Nickel plating exceeds specification QQ-N-290 Class I, Type VII.

Wire Range: Strap Screw: #22-10 AWG max., solid or stranded with crimp terminals

Strap Clamp: #18-8 AWG, solid or stranded

Tubular Screw: #18-4 AWG, solid or stranded

Tubular Clamp: #18-6 AWG, solid or stranded

Wire Strip Length: Strap Screw: As needed for lugging

Strap Clamp: 1/2 in. [12.7]

Tubular Screw: 1/2 in. [12.7]

Tubular Clamp: 1/2 in. [12.7]

Screw Type: Strap Screw: 10-32 slotted binding head

Strap Clamp: 8-32 pan head w/ clamp

Tubular Screw: 1/4-28 slotted headless

Tubular Clamp: 1/4-28 slotted headless

Strap Screw: Maximum width of lugs: 11/32 in. [8.73]

Nylon Housing

Material—Phenolic, Filled Flame Retardant

Max. Continuous Temperature—150°C, [302°F]

Breakdown Voltage—
Contact-to-Contact: 7800V
Contact-to-Ground: 9400V

Dielectric Strength (RH 40% at Sea Level)—300 Volts/mil thickness per ASTM #D149

UL High Voltage Arc Tracking (Inches/min.)—.49-.58 [12.45-14.73]

Water Absorption (24 hrs. % wt. gain)—0.45% per ASTM D570

Flammability—UL94V-1

Chemical Resistance—Resistant to acids, alkalies, and aliphatic hydrocarbons and ketones, per ASTM D543.

Radiation Resistance (ergs g-1 (C)—2.7 x 108 min.

Color—Black

Independent Testing Service Listing and Recognition

WIRE SIZES, Solid or Stranded Tublar Screw

Tubular Screw

1 #4 AWG, 1 #6 AWG,
1 or 2 #8 AWG, 1 to 4 #10 AWG,
1 or 5 #12 AWG, 1 to 6 #14 AWG,
1 or 6 #16 AWG, 1 to 8 #18 AWG,

Tubular Clamp

1 #6 AWG, 1 or 2 #8 AWG,
1 to 3 #10 AWG, 1 to 4 #12 AWG,
1 or 4 #14 AWG, 1 to 6 #16 AWG,
1 or 8 #18 AWG

Strap Clamp

1 #18 to 1 #8 AWG

LR25557 E63810

Catalog 1308389
Revised 6-07

www.tycoelectronics.com

Dimensions are in millimeters and inches unless otherwise specified.

Dimensions are shown for reference purposes only. Specifications subject to change.

USA: 1-800-522-6752
Canada: 1-905-470-4425
Mexico: 01-800-733-8926
C. America: 52-55-1106-0803

South America: 55-11-2103-6000
Hong Kong: 852-2735-1628
Japan: 81-44-844-8013
UK: 8706-080-208

Note: All part numbers are RoHS Compliant.

200 Series, Heavy Duty Phenolic

Flat Base

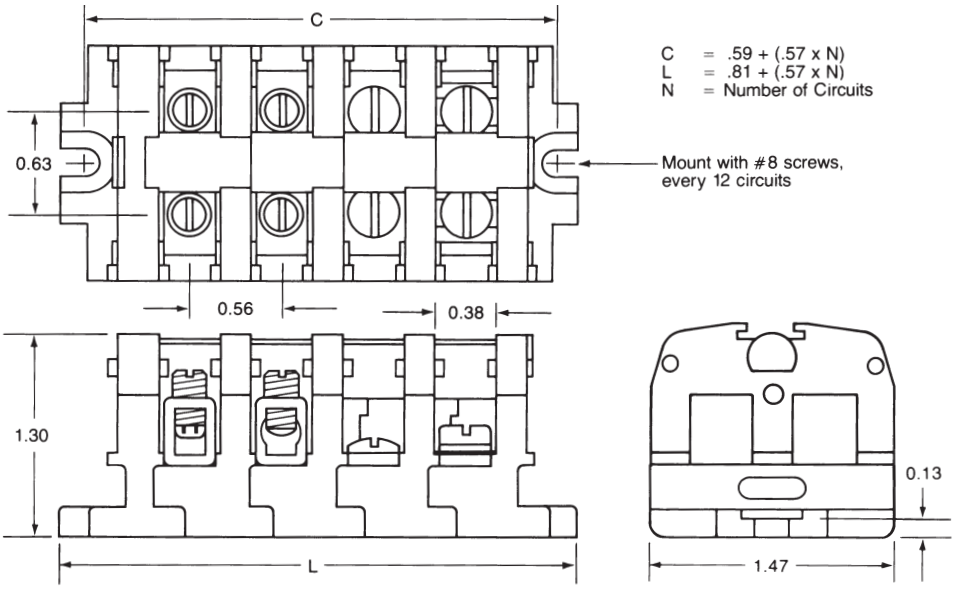

Dovetail Base Mounted On Standard #60 Channel

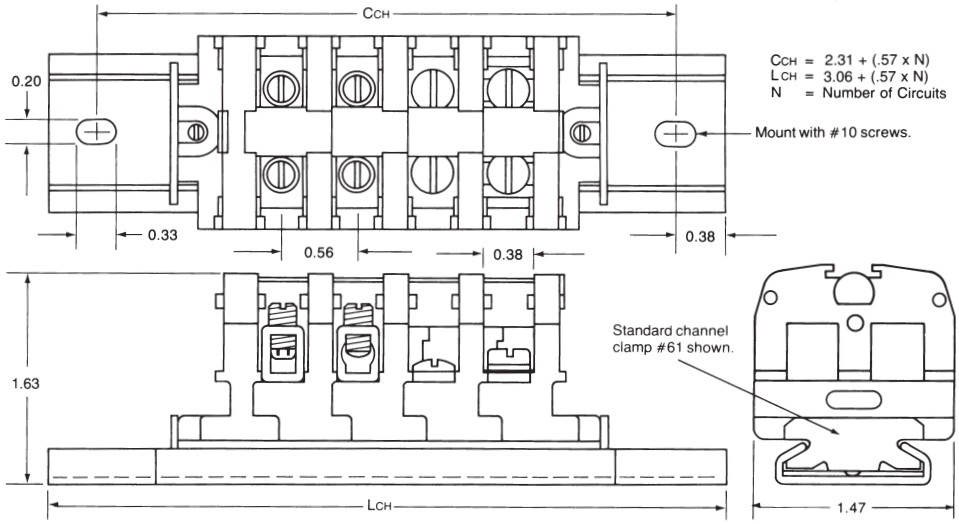

Sectional Fanning Strips

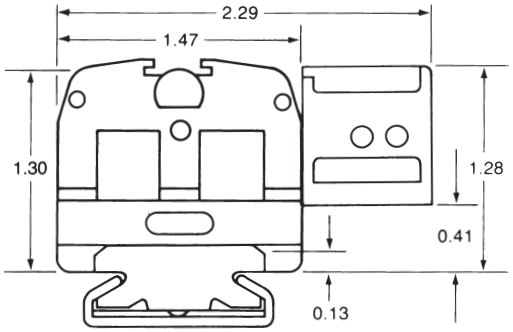

Dimensions are in millimeters and inches unless otherwise specified.

Dimensions are shown for reference purposes only. Specifications subject to change.

USA: 1-800-522-6752
Canada: 1-905-470-4425
Mexico: 01-800-733-8926
C. America: 52-55-1106-0803

South America: 55-11-2103-6000
Hong Kong: 852-2735-1628
Japan: 81-44-844-8013
UK: 8706-080-208

Note: All part numbers are RoHS Compliant.

800 Series, Intermediate Heavy Duty

Product Facts

- **An exceptionally compact block that accepts single or combinations of AWG wire sizes as large as #1/0 — at least 92 circuits per 6-foot length, 3/4 inch center-to-center spacing.**
- **Tubular screw contact style accepts AWG wire sizes from #12 thru #1/0, solid or stranded.**
- **Same block mounts on surface or channel — two-way mounting base fits standard channel or mounts directly to flat surfaces.**
- **Packaged for rapid handling and assembly — snap-fit sections packaged 10 per carton.**
- **Contacts conservatively rated at 155 amperes per circuit when used with copper wire.**
- **Only one end section needed per block assembly.**
- **Readily identify circuits — blocks available with painted marking surface or use removable vinyl marking strip. Preprinted marking strips are also available.**
- **Factory assembled blocks available.**
- **Nylon housing material for the most rugged applications.**
- **Allen head screw for aluminum wire — screw tip design helps protect aluminum wire from overtightening. Slotted screw head for copper wire.**
- **Intermediate Heavy Duty blocks snap-fit with 300 & 600V, Medium Duty phenolic, Heavy Duty nylon, polypropylene and phenolic and Fuse and Switch blocks.**

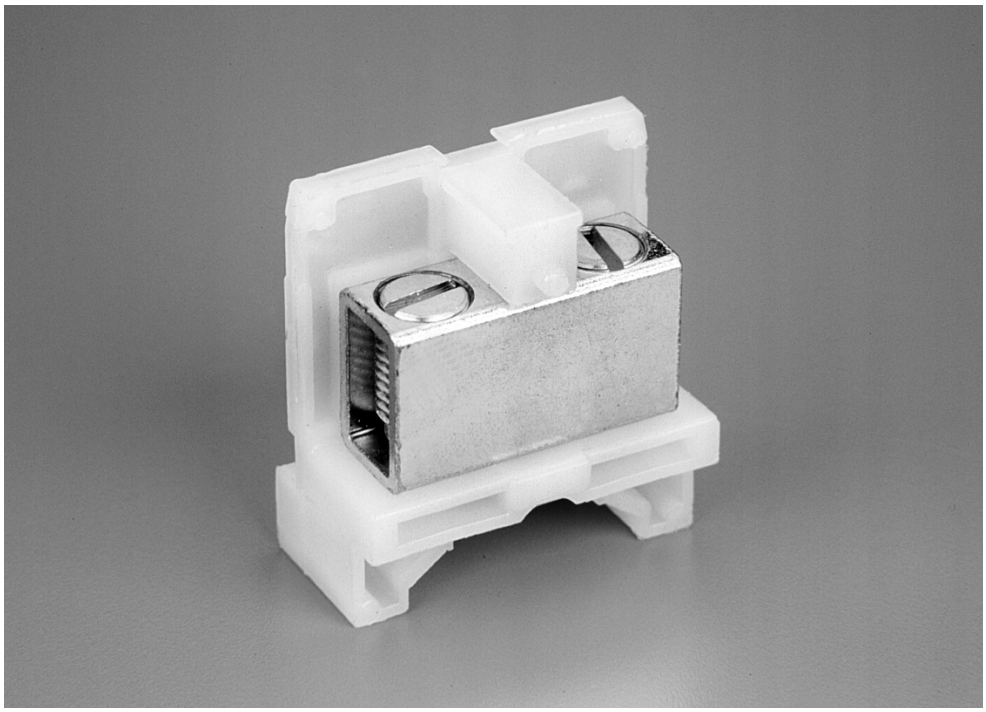

This line of 600 volt blocks is rated up to 150 A and is available in a standard version and a corrosion resistant version.

LR25557 E63810

Catalog 1308389
Revised 6-07

www.tycoelectronics.com

Dimensions are in millimeters and inches unless otherwise specified.

Dimensions are shown for reference purposes only. Specifications subject to change.

USA: 1-800-522-6752
Canada: 1-905-470-4425
Mexico: 01-800-733-8926
C. America: 52-55-1106-0803

South America: 55-11-2103-6000
Hong Kong: 852-2735-1628
Japan: 81-44-844-8013
UK: 8706-080-208

Note: All part numbers are RoHS Compliant.

800 Series, Intermediate Heavy Duty, 600 V, 0.75” Pitch

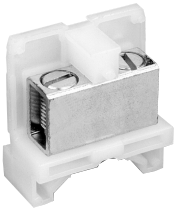

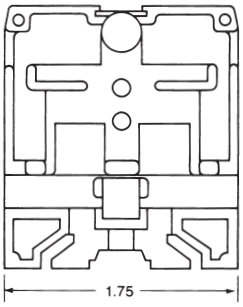

Same part used for both panel and channel mounting.

Material & Finish

Housing Material—Polyamide type 6/6, unfilled

Max Continuous Temp.—125°C [257°F]

Water Absorption (24hrs. % wt. gain)—1.5%

Flammability—UL94V-2

Chemical Resistance—Resistant to aromatic hydrocarbons, strong alkalies

Radiation Resistance (ergs g-1 (C)—8 x 107

Color—Translucent white

Electrical Properties

Voltage Rating—Blocks meet 600V clearance and creepage requirements of NEMA, UL, and CSA standards for general industrial control equipment and panelboards. Withstand voltages in excess of IEEE switchgear standards for 750V.

Breakdown Voltage, AC, 60Hz—
Contact-to-Contact: 8,800V
Contact-to-Ground: 9000V

Dielectric Strength — RH 40% @ Sea Level—470-385 Volts/mil thickness per ASTM D149

Operating Voltage—Blocks meet 600V creepage and clearance requirements; withstand voltage greatly exceeds standards for 750V

UL High Voltage Arc Tracking (in./min.)—.01-.35 [.25-8.89]

Contacts

Standard Contacts

Material—Electrical grade copper conductor

Screws—Steel, zinc plated to resist corrosion in most applications

Duramax Contacts (for highly corrosive atmospheres)

Tubular Screw—Electrical grade copper tube with nickel plating; nickel plated brass screws. Nickel plating exceeds specification QQ-N-290 Class 1, Type VII.

Wire Range—#12-1/0 AWG, solid or stranded

Wire Strip Length—11/16" [17.46]

Screw Type—7/16" [11.11] - 20 slotted headless screw

Description	Part No.	Catalog No.
Tubular Screw, Unpainted	1437395-2	814
Tubular Screw, Painted	1437395-3	824-BU
Corrosion Resistant, Unpainted	5-1437389-8	D814-BU
Corrosion Resistant, Painted	5-1437389-9	D824
End Section	1-1437395-4	830-BU

Notes:
For factory assembled blocks on channel, prefix Catalog # with “0” and suffix with number of blocks desired. Without channel (maximum of 6 sections) delete “0”. See page 275 for dimensions and other details.
Example: Ten tubular screw sections preassembled on channel = 082410

For unpainted factory assembled blocks supplied with a removable marking strip add -1 to Catalog Number.

For blocks with two or more different contact sections, imprinted marking strips or special features; consult Technical Support.

Independent Testing Service Listing and Recognition

UL Wire Sizes—Solid or Stranded, Tubular Screw
1 — #1/0 AWG, 1 — #1 AWG
1 — #2 AWG, 1 or 2 — #4 AWG
1, 2 or 3 — #6 AWG,
1, 2, 3 or 5 — #8 AWG
1 to 6 — #10 AWG, 1 to 7 — #12 AWG

LR25557 E63810

Dimensions are in millimeters and inches unless otherwise specified.

Dimensions are shown for reference purposes only. Specifications subject to change.

USA: 1-800-522-6752
Canada: 1-905-470-4425
Mexico: 01-800-733-8926
C. America: 52-55-1106-0803

South America: 55-11-2103-6000
Hong Kong: 852-2735-1628
Japan: 81-44-844-8013
UK: 8706-080-208

Note: All part numbers are RoHS Compliant.

800 Series, Intermediate Heavy Duty Accessories

Mounting Channel

Channel Clamps

Steel Channel	Break Away Steel	Pre-punched Aluminum Channel	Screw Channel Clamps	Universal Clamps	Snap-In Clamps	See-thru Cover	Ganging Rod
Part Number							
9-1437381-1 9-1437381-8	9-1437381-2	9-1437381-9 1437382-2	9-1437381-5	1437382-3	9-1437381-7	4-1437390-4	3-1437381-9
Catalog Number							
60 63-BU	60-B-36	64 67	61	68	62	93-BU	30-BU
Standard Length							
6 feet 3 feet	3 feet	6 feet 3 feet	—	—	—	—	2 feet

Marking Accessories

Jumpers

Plastic Cloth Tape	Plastic Cloth Tape	Vinyl Marking Strips	Elevated Marking Strip	Holding Screw	Snap-apart Jumper
Part Number					
1437382-1	8-1437381-0	6-1437381-3	4-1437391-1	7-1437381-8	1-1437382-6
Catalog Number					
66	55-BU	50-BU	52	53-BU	76
Standard Length					
—	50 feet	25 feet	18 inches	—	12 ckt

RELATED PRODUCT DATA

Wire Pins and Ferrules: Pages 109-111

For more information on AMP Standard Terminals and Splices or Quick-Connect FASTON Receptacles and Tabs, request Catalog 82042.

Dimensions are in millimeters and inches unless otherwise specified.

Dimensions are shown for reference purposes only. Specifications subject to change.

USA: 1-800-522-6752
Canada: 1-905-470-4425
Mexico: 01-800-733-8926
C. America: 52-55-1106-0803

South America: 55-11-2103-6000
Hong Kong: 852-2735-1628
Japan: 81-44-844-8013
UK: 8706-080-208

Note: All part numbers are RoHS Compliant.

800 Series, Intermediate Heavy Duty

Flat Base

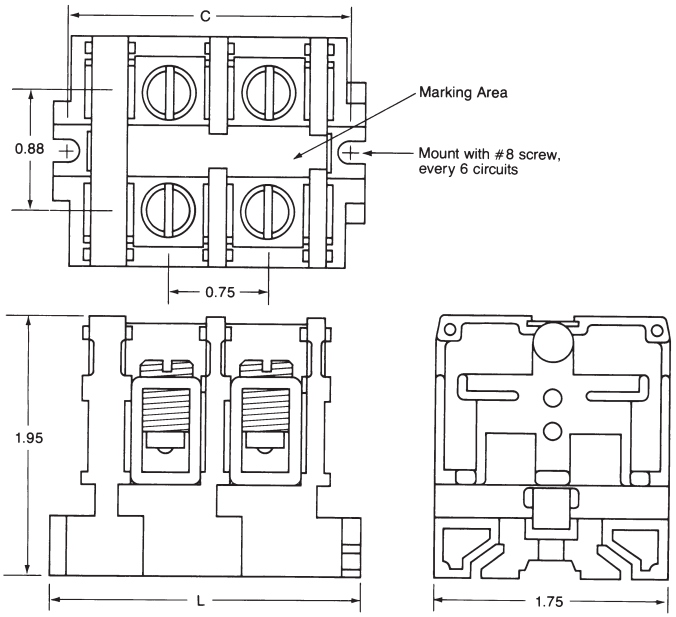

Dovetail Base Mounted On Standard #60 Channel

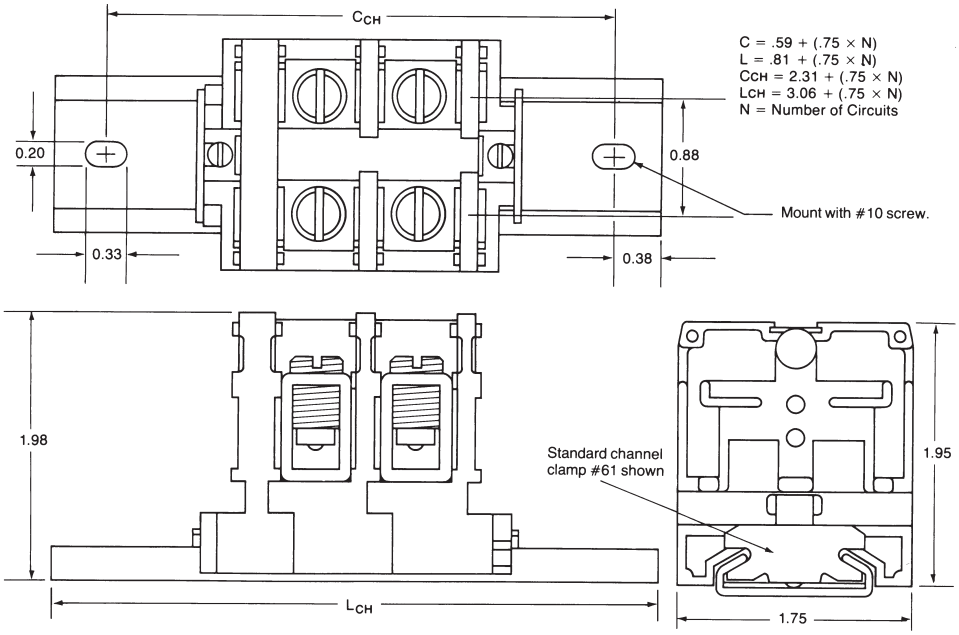

LR25557 E63810

Catalog 1308389
Revised 6-07

www.tycoelectronics.com

Dimensions are in millimeters and inches unless otherwise specified.

Dimensions are shown for reference purposes only. Specifications subject to change.

USA: 1-800-522-6752
Canada: 1-905-470-4425
Mexico: 01-800-733-8926
C. America: 52-55-1106-0803

South America: 55-11-2103-6000
Hong Kong: 852-2735-1628
Japan: 81-44-844-8013
UK: 8706-080-208

Note: All part numbers are RoHS Compliant.

400 Series, Ultra Heavy Duty

Product Facts

400 Series

- **Compact 2/0 or 250 kcmil (MCM) block - at least 57 circuits per 6- foot length, 1-3/16" [30.16] center-to-center spacing.**
- **High current capacity snap-fit sectional block — tubular contacts accept single or combinations of wire sizes as large as 250 kcmil (MCM).**
- **Two contact styles available; rated up to 270 amperes for copper wire.**
- **Allen head screws allow maximum torque when using large wire sizes.**
- **Withstand voltages in excess of IEEE switchgear standards for 750 volts. Meet clearance and creepage spacing specified in UL, CSA, and NEMA Industrial Control Standards for 600 volts.**
- **Same block directly mounts on surface or channel mounts.**
- **Only one end section needed per block assembly.**
- **Readily identify circuits— order blocks with painted marking area or use removable vinyl marking strip. Preprinted marking strips are also available.**
- **Factory assembled blocks available.**
- **Ultra Heavy Duty phenolic block sections do not snap-fit with other block styles.**

This Ultra Heavy Duty line includes the 400 Series rated up to 270 A.

LR25557 E63810

Catalog 1308389
Revised 6-07

www.tycoelectronics.com

Dimensions are in millimeters and inches unless otherwise specified.

Dimensions are shown for reference purposes only. Specifications subject to change.

USA: 1-800-522-6752
Canada: 1-905-470-4425
Mexico: 01-800-733-8926
C. America: 52-55-1106-0803

South America: 55-11-2103-6000
Hong Kong: 852-2735-1628
Japan: 81-44-844-8013
UK: 8706-080-208

Note: All part numbers are RoHS Compliant.

400 Series, Ultra Heavy Duty, 600 V, 1.19" [30.23] Pitch

Material & Finish

Housing Material—Phenolic, filled flame retardant
Flammability—UL94V-1
Color—Black

Contacts:

Material—Electrical grade copper conductor; plated steel screws resist corrosion

Tubular Screw Type—
Small: 1/2" [12.7] - 13 Hex
Large: 3/4" [19.05] - 16 Hex socket set screw

Mechanical Properties

Pitch (terminal spacing)—1.19" [30.23]; 9 circuits/foot

Wire Strip Length—
Tubular Screw (small): 1" [25.4]
Tubular Screw (large): 1" [25.4]

Electrical Properties

Maximum Current—255A for a single 250MCM wire

Operating Voltage—Blocks meet 600V creepage and clearance requirements; withstand voltage greatly exceeds standards for 750V

Wire Range—Tubular Screw (small): #4-#2/0 AWG solid or stranded; Tubular Screw (large): #6 AWG-250 kcmil (MCM) solid or stranded

Dielectric Strength (RH 40% @ sea level)—300 V/mil thickness per ASTM D149

Breakdown Voltage, AC, 60Hz—
Contact-to-Contact: 10,000V
Contact-to-Ground: 10,000V

UL High Voltage Arc Tracking (in./min.)—.49-.58 [12.45-14.73]

Environmental Properties

Max. Continuous Temperature—150°C [302°F]

Water Absorption (24hrs. % wt. gain)— .45% per ASTM D149

Chemical Resistance—Resistant to acids, alkalies, and aliphatic hydrocarbons and ketones per ASTM D543

Radiation Resistance (ergs g-1 (C)—2.7 x 108

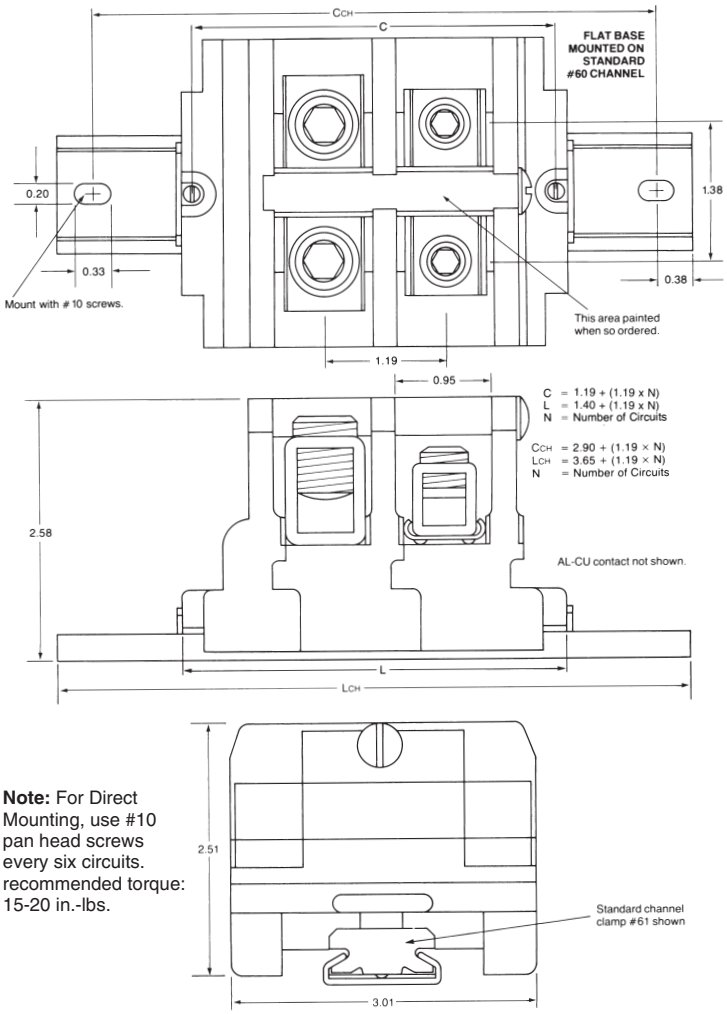

Note: For Direct Mounting, use #10 pan head screws every six circuits. recommended torque: 15-20 in.-lbs.

Same part used for both panel and channel mounting.

Description	Wire Range	Part Number	Catalog Number
Tubular Screw, Unpainted	#14-2/0	1437396-4	416
Tubular Screw, Painted	#14-2/0	1437396-7	426-BU
Tubular Screw, Unpainted	#6-250 kcmil/MCM	1437396-5	417
Tubular Screw, Painted	#6-250 kcmil/MCM	1437396-8	427-BU
End Section	—	1437396-9	430-BU

UL Independent Testing Service Recognitions:

Tubular Screw: Catalog # 416 & 426-BU
1 #2/0 AWG, 1 #1/0 AWG, 1 #1 AWG,
1 or 2 #2 AWG, 1 to 3 #4 AWG, 1 to 3 #6 AWG,
1 to 4 #8 AWG, 1 to 6 #10 AWG, 2 to 8 #12 AWG,

Tubular Screw: Catalog # 417 & 427-BU
1 #250kcmil (MCM), 1 #4/0 AWG, 1 #3/0 AWG,
1 or 2 #2/0 AWG, 1 or 2 #1/0 AWG, 1 or 2 #1 AWG, 1 to 3 #2 AWG, 1 to 4 #4 AWG,
1 to 5 #6 AWG

LR25557 E63810

Dimensions are in millimeters and inches unless otherwise specified.

Dimensions are shown for reference purposes only. Specifications subject to change.

USA: 1-800-522-6752
Canada: 1-905-470-4425
Mexico: 01-800-733-8926
C. America: 52-55-1106-0803

South America: 55-11-2103-6000
Hong Kong: 852-2735-1628
Japan: 81-44-844-8013
UK: 8706-080-208

Note: All part numbers are RoHS Compliant.

400 Series, Ultra Heavy Duty Accessories

Mounting Channel

Channel Clamps

Steel Channel	Break Away Steel	Pre-punched Aluminum Channel	Screw Channel Clamps	Universal Clamps	Snap-In Clamps
Part Number					
9-1437381-1 9-1437381-8	9-1437381-2	9-1437381-9 1437382-2	9-1437381-5	1437382-3	9-1437381-7
Catalog Number					
60 63-BU	60-B-36	64 67	61	68	62
Standard Length					
6 feet 3 feet	3 feet	6 feet 3 feet	—	—	—

Marking Accessories

Plastic Cloth Tape	Vinyl Marking Strips	Elevated Marking Strip	Holding Screw
Part Number			
8-1437381-0	6-1437381-3	4-1437391-1	7-1437381-8
Catalog Number			
55-BU	50-BU	52-BU	53-BU
Standard Length			
50 feet	25 feet	18 inches	—

Notes:
For factory assembled blocks on channel, prefix Catalog # with “0” and suffix with number of blocks desired. Without channel (maximum of 6 sections) delete “0”.
Example: Ten tubular screw sections preassembled on channel = 041710

For unpainted factory assembled blocks supplied with a removable marking strip add -1 to Catalog Number.

For blocks with two or more different contact sections, imprinted marking strips or special features, consult Technical Support.

Related Product Data

Wire Pins and Ferrules—Pages 109-111
For more information on AMP Standard Terminals and Splices or Quick-Connect FASTON Receptacles and Tabs, request Catalog 82042.

Dimensions are in millimeters and inches unless otherwise specified.

Dimensions are shown for reference purposes only. Specifications subject to change.

USA: 1-800-522-6752
Canada: 1-905-470-4425
Mexico: 01-800-733-8926
C. America: 52-55-1106-0803

South America: 55-11-2103-6000
Hong Kong: 852-2735-1628
Japan: 81-44-844-8013
UK: 8706-080-208

Note: All part numbers are RoHS Compliant.

Engineering Notes

Catalog 1308389
Revised 6-07

www.tycoelectronics.com

Dimensions are in millimeters and inches unless otherwise specified.

Dimensions are shown for reference purposes only. Specifications subject to change.

USA: 1-800-522-6752
Canada: 1-905-470-4425
Mexico: 01-800-733-8926
C. America: 52-55-1106-0803

South America: 55-11-2103-6000
Hong Kong: 852-2735-1628
Japan: 81-44-844-8013
UK: 8706-080-208

Note: All part numbers are RoHS Compliant.

Fuse & Switch

Product Facts

High Density Blocks

- **Fuse and Switch Blocks rated 15A and 300V.**
- **High Density 0.36" [9.14] centerline spacing saves panel space; at least 33 circuits per foot.**

Fuse Blocks

- **Provide in-line circuit protection for virtually any circuit or group of circuits — select contacts for terminated or unterminated wire.**
- **Remove, check and replace fuses safely and quickly — switch action fuse blocks open circuits before fuse can be removed or installed.**
- **Contacts conservatively rated to 30 amperes.**

Switch Blocks

- **Quickly and easily interrupt a circuit or group of circuits — insert switch blocks directly in line. Contacts available for terminated or unterminated wire.**
- **Keep circuits open for extended periods — switch blade can be removed entirely from block for lock-out protection.**
- **Rated to 15 amperes.**

Common Features of 300 & 0300 Series

- **At least 91 circuits per 6-foot length, 3/4 inch center-to-center spacing.**
- **Blocks meet 600 volt clearance and creepage spacings specified in UL, CSA, and NEMA Industrial Control Standards.**
- **Choose nylon housing material — for more rugged applications; polypropylene for fire retardant characteristics.**
- **Dovetail base fits standard mounting channel — can also be mounted on flat surfaces.**
- **Only one end section needed per block assembly.**

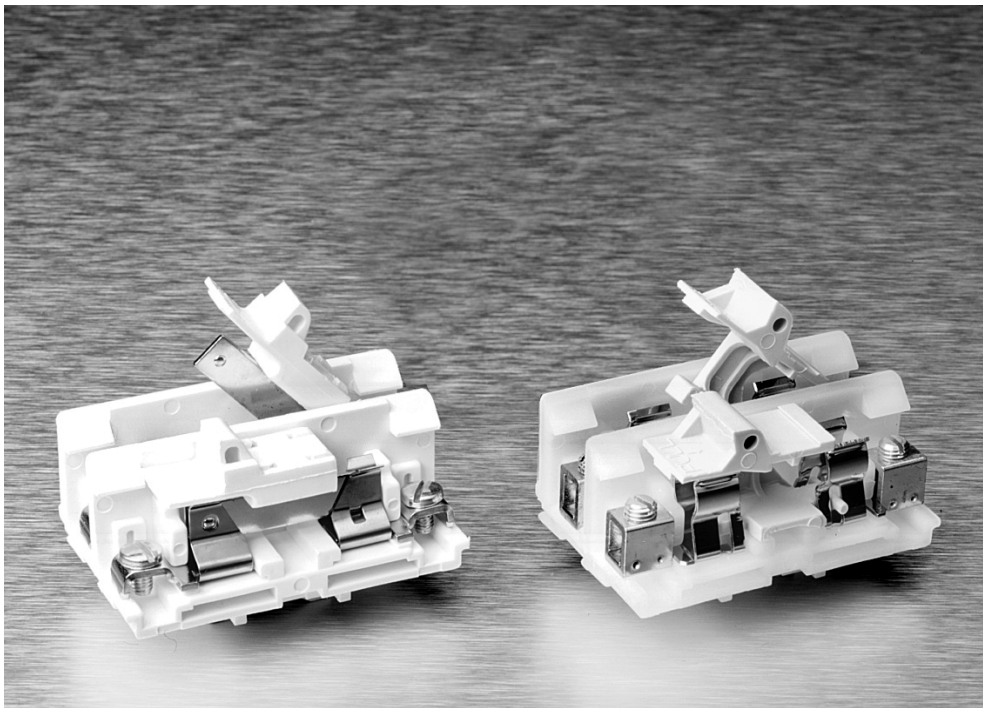

- **Readily identify circuits — mark directly on white, matte-surface puller assembly, marking tab on block, or use removable marking tape.**
- **Open or close several circuits simultaneously — holes in puller handles allow use of nylon "ganging" rods.**
- **Fuse and Switch block sections snap-fit with 300 & 600 Volt, phenolic Medium Duty, Heavy Duty, and Intermediate Heavy Duty blocks.**

This broad line features High Density Blocks (Series 0135), Nylon & Polypropylene Blocks (Series 0300) and Phenolic Blocks (Series 300).

LR25557 E63810

Catalog 1308389
Revised 6-07

www.tycoelectronics.com

Dimensions are in millimeters and inches unless otherwise specified.

Dimensions are shown for reference purposes only. Specifications subject to change.

USA: 1-800-522-6752
Canada: 1-905-470-4425
Mexico: 01-800-733-8926
C. America: 52-55-1106-0803

South America: 55-11-2103-6000
Hong Kong: 852-2735-1628
Japan: 81-44-844-8013
UK: 8706-080-208

Note: All part numbers are RoHS Compliant.

0300 Series, Fuse & Switch, Nylon and Polypropylene

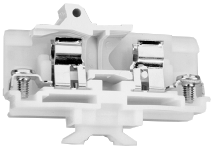

Fuse Block Strap Screw

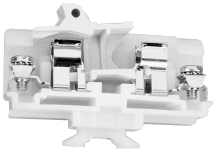

Fuse Block Strap Clamp

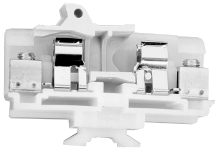

Fuse Block Tubular Screw

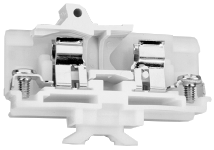

Switch Block Strap Screw

Characteristics

Type of Block	Model	Part Number	Model	Part Number	Model	Part Number	Model	Part Number
Channel Mount (Dovetail Base)								
Nylon	0311	1437397-1	0318	1437397-3	0312	1437397-2	0371	1-1437397-7
Polypropylene	P0311	4-1437397-0	P0318	4-1437397-3	P0312	4-1437397-2	P0371	4-1437397-4
Corrosion Resistant Nylon	D0311	1-1437389-1	D0318	1776726-1	D0312	1-1437389-2	D0371	1-1437389-7
Corrosion Resistant Polypropylene	DP0311	6-1437389-2	DP0318	1776727-1	DP0312	6-1437389-3	DP0371	1776728-1

Contact Type

Specifications				
Wire Range (AWG) Solid & Stranded	22-8	18-8	18-8	22-8
Wire Strip Length (in.)	—	1/2	1/2	—
Screw Type	10-32 binding head	8-32 pan head w/clamp	1/4"-28 set screw	10-32 binding head
Ampacity				
	25 A	25 A	25 A	15 A

End Sections								
Channel Mount, Nylon	0380	2-1437397-0	0380	2-1437397-0	0380	2-1437397-0	0380	2-1437397-0
Channel Mount, Polypropylene	P0380	4-1437397-7	P0380	4-1437397-7	P0380	4-1437397-7	P0380	4-1437397-7

Notes: Standard package is 100 pieces for contact, 25 pieces for end section.

For factory assembled blocks on channel, suffix Catalog Number with number of blocks desired.
Without channel delete “0” prefix on Catalog Number.
EXAMPLE:
Ten strap-screw fuse block sections preassembled on channel = 031110.

For blocks with two or more contact types, preassembled with other blocks, imprinting or special features, consult Technical Support.

Dimensions are in millimeters and inches unless otherwise specified.

Dimensions are shown for reference purposes only. Specifications subject to change.

USA: 1-800-522-6752
Canada: 1-905-470-4425
Mexico: 01-800-733-8926
C. America: 52-55-1106-0803

South America: 55-11-2103-6000
Hong Kong: 852-2735-1628
Japan: 81-44-844-8013
UK: 8706-080-208

Note: All part numbers are RoHS Compliant.

0300 Series, Fuse & Switch, Nylon and Polypropylene (Continued)

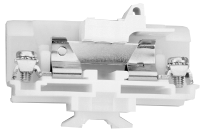

Switch Block Strap Clamp

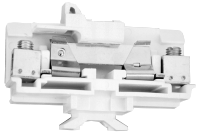

Switch Block Tubular Screw

Model	Part Number	Model	Part Number
0378	1-1437397-9	0372	1-1437397-8
P0378	4-1437397-6	P0372	4-1437397-5
D0378	1776729-1	D0372	1776731-1
DP0378	1776730-1	DP0372	1776732-1

18-8	18-8
1/2	1/2
8-32 pan head w/clamp	1/4"-28 set screw
15 A	15 A
0380 2-1437397-0	0380 2-1437397-0
P0380 4-1437397-7	P0380 4-1437397-7

Specifications

Pitch—0.75" [19.05] centerline, 16 circuits per foot

Voltage Rating—Blocks meet 600 volt creepage and clearance requirements of NEMA, UL and CSA for general industrial control equipment and panelboards. Withstand voltages greatly in excess of IEE switchgear standards for 750 volts.

Fuse Size—Any 13/32 x 1-1/2 in. [10.32 x 28.10] ferrule type cartridge fuse up to 25 amps, indicating or non-indicating, which meets Mil. Spec. F-15160.

Standard Contacts

Material—Electrical grade copper or copper alloy conductor. Steel Screws plated to resist corrosion in most industrial applications

AL-CU Tubular Screw—Aluminum compatibility with aluminum or copper conductors. AL-CU is tin-plated brass.

Environmental Contacts (for highly corrosive atmospheres)

Tubular Screw—Electrical grade copper tube with nickel plating. Nickel plated brass screws.

Strap Screw—Nickel plated brass straps and screws. Nickel plating meets specification QQ-N-290A Class I, Grade G.

Polyamide Material:

Housing Material—Polyamide, Unfilled Type 6/6

Max. Continuous Temperature—125°C, (257°F)

Breakdown Voltage (AC, 60 Hz)—

Contact-to-Contact: 7000V

Contact-to-Ground: 10,000V

Dielectric Strength (RH 40% at Sea Level)—470-385 Volts/mil thickness Per ASTM D149

UL High Voltage Arc Tracking (inches/min.)—.01-.35 [.25-8.89]

Water Absorption (24 hrs. % wt. gain)—1.5% per ASTM D570

Flammability—UL94V-2

Chemical Resistance—Resistant to aromatic hydrocarbons, strong alkalies per ASTM D543

Radiation Resistance (ergs g-1 (C)—8 x 107

Color—Translucent White

Polypropylene Material:

Housing Material—Polypropylene, Filled self-extinguishing

Max. Continuous Temperature—105°C, (221°F)

Breakdown Voltage (AC, 60Hz)—

Contact-to-Ground: 10,000V

Contact-to-Contact: 7000V

Dielectric Strength (RH 40% at Sea Level)—500 Volts/mil thickness per ASTM D149

UL High Voltage Arc Tracking (inches/min.)—Did not track

Water Absorption (24 hrs. % wt. gain)—0.02% Per ASTM D570

Flammability—UL94V-0

Chemical Resistance—Resistant to most acids, alkalines, and saline solutions. Also resistant to higher aliphatic solvents and polar substances per ASTM D543

Radiation Resistance (ergs g-1 (C)— No data Available

Color—Opaque White

Fuse Puller:	
Material	High-temperature, glass-reinforced nylon
Color	Black
Switch Handle:	
Material	Polypropylene
Color	White

Catalog 1308389
Revised 6-07

www.tycoelectronics.com

Dimensions are in millimeters and inches unless otherwise specified.

Dimensions are shown for reference purposes only. Specifications subject to change.

USA: 1-800-522-6752
Canada: 1-905-470-4425
Mexico: 01-800-733-8926
C. America: 52-55-1106-0803

South America: 55-11-2103-6000
Hong Kong: 852-2735-1628
Japan: 81-44-844-8013
UK: 8706-080-208

Note: All part numbers are RoHS Compliant.

0300 Series, Fuse & Switch, Nylon and Polypropylene (Continued)

Mounting Channel

Steel Channel	Break Away Steel	Pre-punched Aluminum Channel
Part Number		
9-1437381-1 9-1437381-8	9-1437381-2	9-1437381-9 1437382-2
Catalog Number		
60 63-BU	60-B-36	64 67
Standard Length		
6 feet 3 feet	3 feet	6 feet 3 feet

Channel Clamps

Marking Accessories

Screw Channel Clamps	Universal Clamps	Snap-In Clamps	Ganging Rod	Coated Cloth Marking tape
Part Number				
9-1437381-5	1437382-3	9-1437381-7	3-1437381-9	8-1437381-0
Catalog Number				
61	68	62	30	55-BU
Standard Length				
—	—	—	2 feet	50 feet

Related Product Data

Wire Pins and Ferrules—Pages 109-111
For more information on AMP Standard Terminals and Splices or Quick-Connect FASTON Receptacles and Tabs, request Catalog 82042.

Dimensions are in millimeters and inches unless otherwise specified.

Dimensions are shown for reference purposes only. Specifications subject to change.

USA: 1-800-522-6752
Canada: 1-905-470-4425
Mexico: 01-800-733-8926
C. America: 52-55-1106-0803

South America: 55-11-2103-6000
Hong Kong: 852-2735-1628
Japan: 81-44-844-8013
UK: 8706-080-208

Note: All part numbers are RoHS Compliant.

0300 Series, Fuse & Switch, Nylon and Polypropylene (Continued)

Dovetail Base Mounted On Standard #60 Channel. May Also Be Mounted Direct

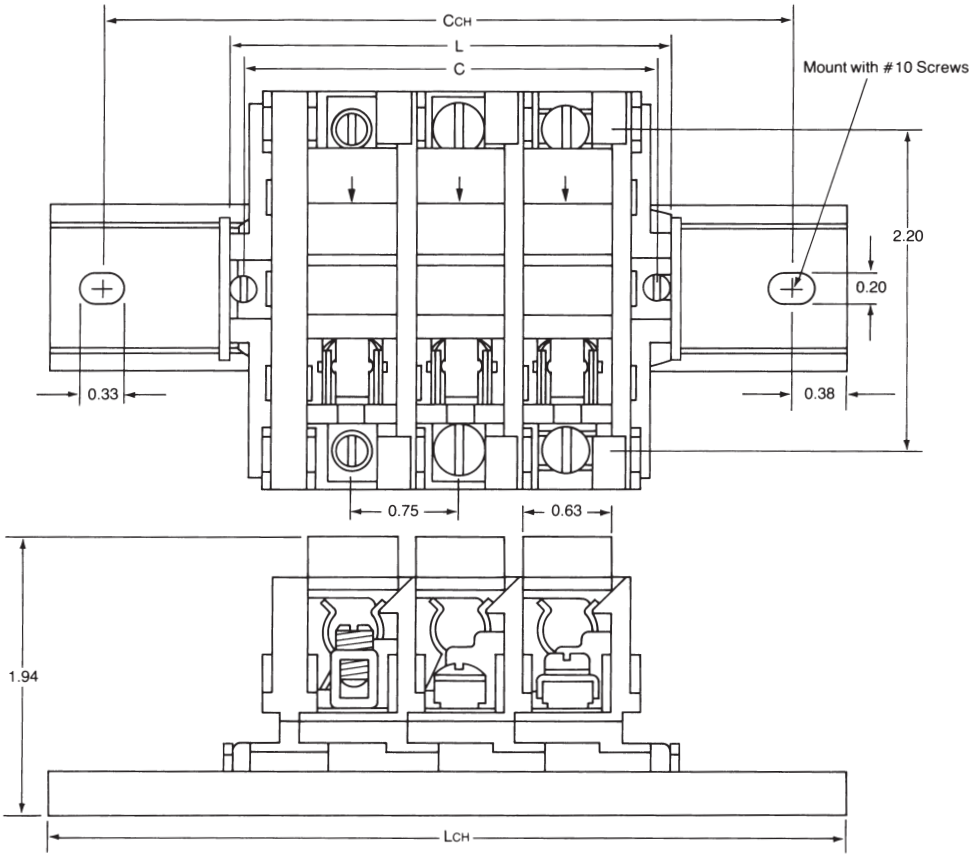

CHANNEL MOUNTED

C_{CH} = 2.28 + (.75 x N)
L_{CH} = 3.03 + (.75 x N)
N = Number of Circuits

DIRECT MOUNTED

C = .56 + (.75 x N)
L = .78 + (.75 x N)
N = Number of Circuits

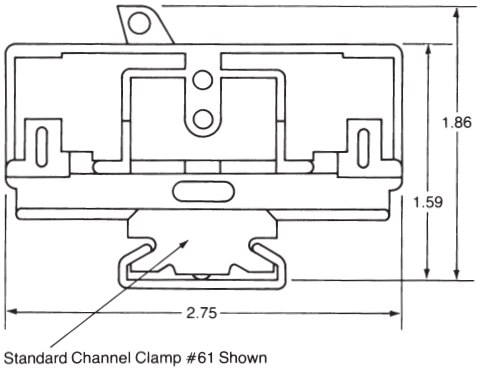

Catalog 1308389
Revised 6-07

www.tycoelectronics.com

Dimensions are in millimeters and inches unless otherwise specified.

Dimensions are shown for reference purposes only. Specifications subject to change.

USA: 1-800-522-6752
Canada: 1-905-470-4425
Mexico: 01-800-733-8926
C. America: 52-55-1106-0803

South America: 55-11-2103-6000
Hong Kong: 852-2735-1628
Japan: 81-44-844-8013
UK: 8706-080-208

Note: All part numbers are RoHS Compliant.

300 Series, Fuse & Switch, Phenolic

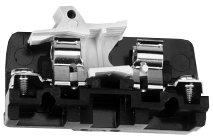

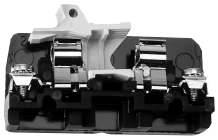

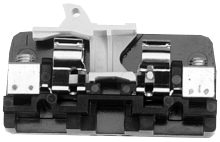

Characteristics	Strap Screw		Strap Clamp		Tubular Screw	
Type of Block	**Model**	**Part Number**	**Model**	**Part Number**	**Model**	**Part Number**
Direct Mount (Flat Base) Fuse Block with Puller	351	2-1437397-8	358	3-1437397-1	352	3-1437397-0
Fuse Block without Puller	361	2-1437397-2	368-BU	3-1437397-5	362-BU	3-1437397-3
Switch Block	341	2-1437397-5	348	2-1437397-7	342	2-1437397-6
Channel Mount (Dovetail Base) Fuse Block with Puller	0351	1437397-9	0358	1-1437397-2	0352	1-1437397-0
Fuse Block without Puller	0361	1437397-4	0368	1-1437397-6	0362	1-1437397-5
Switch Block	0341	1437397-6	0348	1437397-8	0342	1437397-7
Contact Type						
Specifications						
Wire Range (AWG) Solid & Stranded	22-8		18-8		18-8	
Wire Strip Length (in.)	—		1/2		1/2	
Screw Type	8-32 binding head		8-32 pan head w/clamp		1/4"-28 set screw	
Ampacity						
Fuse Blocks	25A		25A		25A	
Switch Blocks	15A		15A		15A	
End Sections						
No Contact, Flat Base	330-BU	2-14376397-4	330-BU	2-14376397-4	330-BU	2-14376397-4
No Contact, Dovetail Base	0330	14376397-5	0330	14376397-5	0330	14376397-5

Comparison (Type of Block)

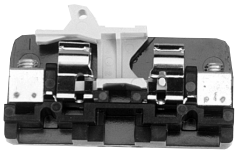

Direct Mount (Flat Base)

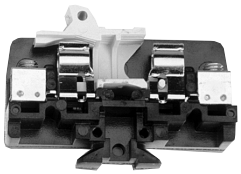

Channel Mount (Dovetail Base)

Notes: Standard package is 10 pieces.

For factory assembled blocks, suffix Catalog Number with number of blocks desired (Maximum number of flat base preassembled sections is 6).
EXAMPLE:
Twelve strap screw, fuse block sections preassembled on channel = 035112.
Six flat tubular screw, switch blocks preassembled without channel for direct mounting = 3426

For blocks with two or more different contact sections, preassembled with other blocks, imprinting or special features, consult Technical Support.

Environmental contacts for highly corrosive atmospheres are available with Nickel plating on non-ferrous hardware. To order, prefix Catalog Number with “D”.

Except Switch Blocks

LR25557 E34934

Dimensions are in millimeters and inches unless otherwise specified.

Dimensions are shown for reference purposes only. Specifications subject to change.

USA: 1-800-522-6752
Canada: 1-905-470-4425
Mexico: 01-800-733-8926
C. America: 52-55-1106-0803

South America: 55-11-2103-6000
Hong Kong: 852-2735-1628
Japan: 81-44-844-8013
UK: 8706-080-208

Note: All part numbers are RoHS Compliant.

300 Series, Fuse & Switch, Phenolic—Accessories

Mounting Channel

Fuse Puller

Steel Channel	Break Away Steel	Pre-punched Aluminum Channel	Fuse Puller	3-Gang Fuse Puller
Part Number				
9-1437381-1 9-1437381-8	9-1437381-2	9-1437381-9 1437382-2	2-1437397-1	2-1437397-2
Catalog Number				
60-BU 63-BU	60-B-36	64 67	31-BU	32
Standard Length				
6 feet 3 feet	3 feet	6 feet 3 feet	—	—

Channel Clamps

Marking Accessories

Screw Channel Clamps	Universal Clamps	Snap-In Clamps	Ganging Rod	Coated Cloth Marking Tape
Part Number				
9-1437381-5	1437382-3	9-1437381-7	3-1437381-9	8-1437381-0
Catalog Number				
61	68	62	30	55-BU
Standard Length				
—	—	—	2 feet	50 feet

Physical Properties

Housing Material—Phenolic, filled flame retardant
Color—Black

Contacts

Material—Copper alloy spring clips. Steel screws plated to resist corrosion in most industrial applications

Strap Screw—11/32" max. lug width

Mechanical Properties

Pitch (terminal spacing)—0.75" [19.05] (16 circuits per foot)

Switch Handles

Material—Polypropylene

Color—White

Electrical Properties

Operating Voltage—Blocks meet 600V creepage and clearance requirements of NEMA, UL and CSA standards for general industrial control equipment and panelboards; withstand voltage exceeds IEEE switchgear standards for 750V

Dielectric Strength (RH 40% @ sea level)—300 volts/mil thickness per ASTM D149

UL High Voltage Arc Tracking (inches/min.)—.49-.58 [12.45-14.73]

Fuse Size—Any 13/32 x 1-1/2 in. [10.32 x 38.10] ferrule type cartridge fuse up to 25 amps, indicating or non-indicating, which meets Mil. Spec. F-15160, is recommended.

Environmental Properties

Max. Service Temperature—150°C (302°F)

Water Absorption (24hrs. % wt. gain)—0.45% per ASTM D570

Flammability Rating—UL94V-1

Chemical Resistance—Resistant to acids, alkalies, and aliphatic hydrocarbons and ketones, per ASTM D543

Radiation Resistance (ergs g-1 (C)—2.7 x 108

UL Independent Testing Service Recognitions:

Wire Sizes—Solid or Stranded, Tubular Screw Cat. # 362-BU, 0362

1 #4 AWG, 1 #6 AWG, 1 #8 AWG, 1 to 4 #10 AWG, 1 to 5 #12 AWG, 1 to 6 #14 AWG, 1 to 6 #16 AWG, 1 to 8 #18 AWG

Related Product Data

Wire Pins and Ferrules—Pages 135-137
For more information on AMP Standard Terminals and Splices or Quick-Connect FASTON Receptacles and Tabs, request Catalog 82042.

Cat #'s 31 and 32

E63810

Note: All part numbers are RoHS Compliant.

300 Series, Fuse & Switch, Phenolic, Flat Base

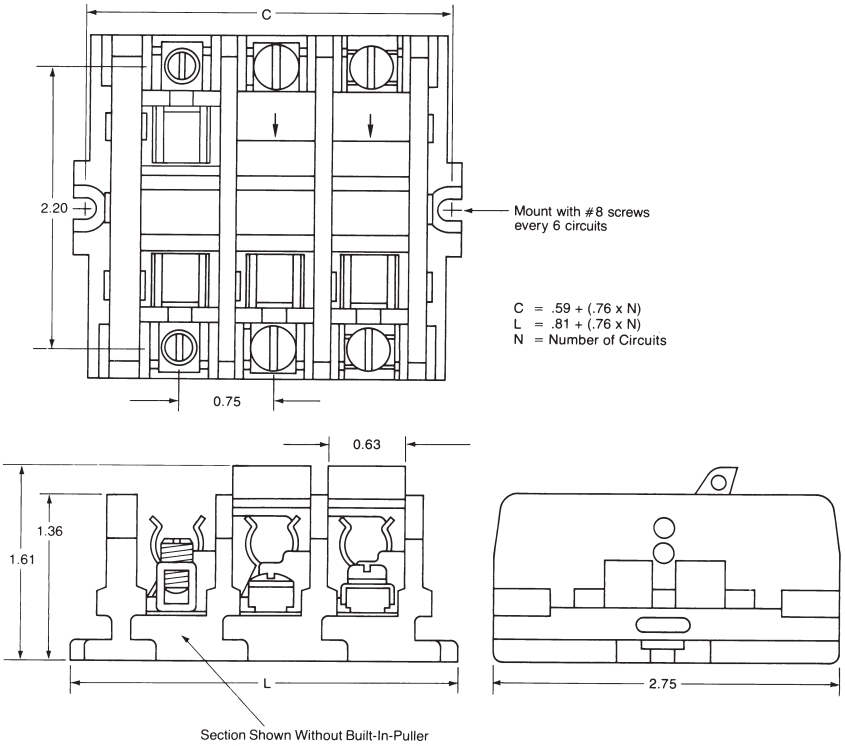

Dovetail Base Mounted On Standard #60 Channel

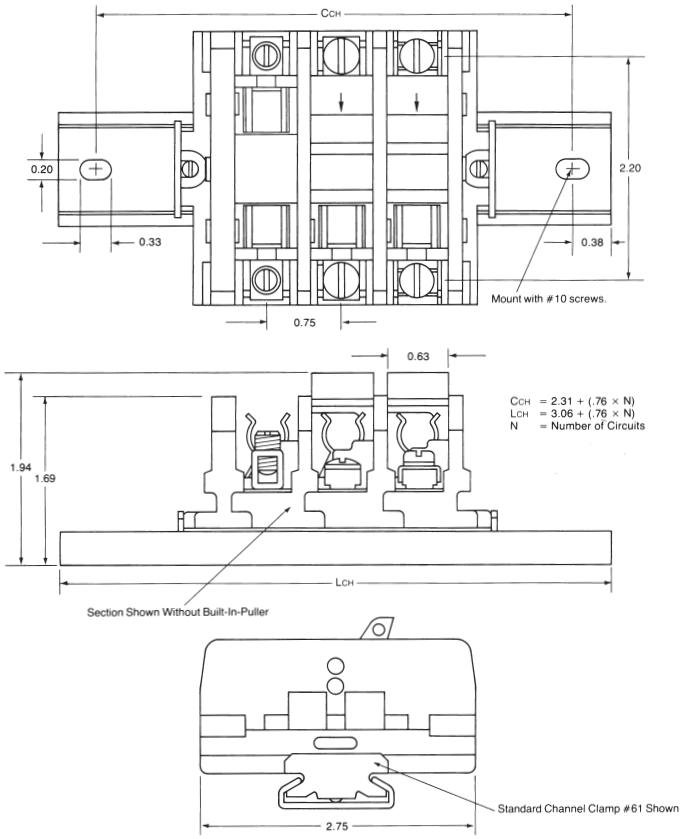

Dimensions are in millimeters and inches unless otherwise specified.

Dimensions are shown for reference purposes only. Specifications subject to change.

USA: 1-800-522-6752
Canada: 1-905-470-4425
Mexico: 01-800-733-8926
C. America: 52-55-1106-0803

South America: 55-11-2103-6000
Hong Kong: 852-2735-1628
Japan: 81-44-844-8013
UK: 8706-080-208

Note: All part numbers are RoHS Compliant.

One-Piece Phenolic Blocks

Product Facts

- **Two, four, six, eight, and twelve circuit models available — 5/8" [15.88] center-to-center contact spacing.**
- **No assembly required — each is a single, easily installed unit.**
- **Three contact styles available —strap screw, captive strap clamp, and moving tubular contact.**
- **Use wire up to #6 AWG with tubular contact. Strap screw and strap clamp contacts are available for #8 and smaller.**
- **Withstand voltages in excess of IEEE standards for 750 volts. Meet clearance and creepage spacings specified in UL, CSA, and NEMA Industrial Control Standards for 600 Volts.**
- **Strap contacts rated at 50 amperes — tubular contact conservatively rated at 70 amperes.**
- **Pilot point screws supplied with strap screw and clamp contacts —speeds installation time.**
- **Plain white marking strip supplied with each block — circuits are easily identified.**
- **Special purpose blocks available—choose from blocks with solder posts, printed circuit board pins, or nuts on screw posts, removable circuit links, and a shorting bar.**

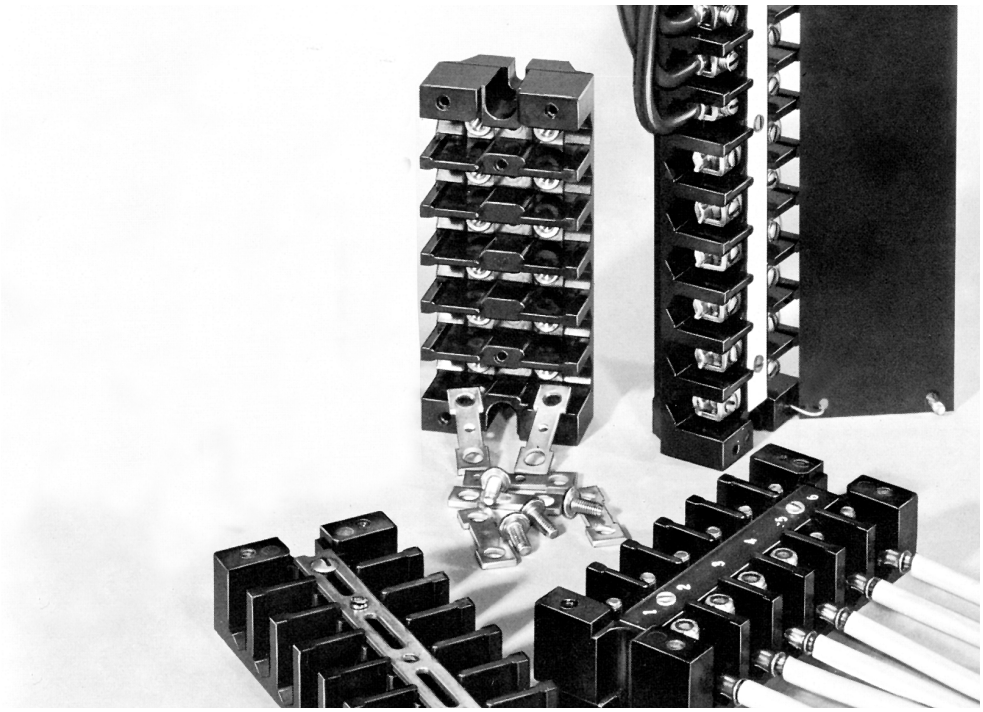

Traditionally, these rugged One-Piece Blocks are the standard means of connection for heavy industrial applications like rail transport, utility, and traffic control industries. Ideal for dirty and vibration prone environments.

LR25557 E63810

Dimensions are in millimeters and inches unless otherwise specified.

Dimensions are shown for reference purposes only. Specifications subject to change.

USA: 1-800-522-6752
Canada: 1-905-470-4425
Mexico: 01-800-733-8926
C. America: 52-55-1106-0803

South America: 55-11-2103-6000
Hong Kong: 852-2735-1628
Japan: 81-44-844-8013
UK: 8706-080-208

Note: All part numbers are RoHS Compliant.

B100, #B100 Series, One-Piece Blocks, 600 V — Phenolic

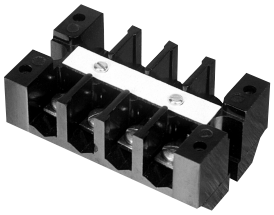

Material & Finish

Housing Material—Phenolic, filled flame retardant
Flammability—UL94V-1
Color—Black

Contacts

Standard Material—Electrical grade copper or copper alloy conductor. Steel screws plated to resist corrosion in most industrial applications.

Brass Material—For Corrosive Environment (2B100, 4B100 Series) Nickel plated brass straps and screws. Meets specification QQ-N-290A Class 1, Grade G

Wire Range—Strap Screw: #18-8 AWG solid or stranded; Tubular Clamp: #14-6 AWG solid or stranded

Screw Type—Strap Screw: #10-32 Binding Head; Tubular Clamp: #1/4"[6.35]-28 Set Screw

Strap Screw—7/16" [11.11] max. lug width

Mechanical Properties

Pitch (terminal spacing)—.63" [16.00]

Wire Strip Length—Strap Screw: as needed for lugging; Tubular Clamp: 1/2" [12.1]

Electrical Properties

Maximum Current—70A for a single #6 AWG wire

Operating Voltage—Blocks meet 600V creepage and clearance requirements for general industrial control equipment and panelboards; greatly exceeds IEEE switchgear standards for 750 volts.

Dielectric Strength (RH 40% @ sea level)—300 Volts/mil thickness per ASTM D149

UL High Voltage Arc Tracking (in./min.)—.49-.58 [12.45-14.73]

Environmental Properties

Max. Continuous Temperature—150°C (302°F)

Water Absorption (24hrs. % wt. gain)—.45% per ASTM D570

Chemical Resistance—Resistant to acids, alkalies, and aliphatic hydrocarbons and ketones per ASTM D543

Radiation Resistance (ergs G^{-1} (C)—2.7 x 10^8 min

UL Independent Testing Service Recognitions

Wire Sizes—Solid or Stranded, Tubular Clamp

1—#6 AWG, 1—#8 AWG, 1or 2 —#10 AWG, 1or 2—#12 AWG, 1 to 3—#14 AWG, 1 —#10 & 1 —#12 AWG 1 — #12 & 1 — #14 AWG

Circuits	Steel Screw w/Strap		Tubular Clamp		Brass Screw w/Strap	
	Part Number	Catalog Number	Part Number	Catalog Number	Part Number	Catalog Number
Contact Type						
AMPACITY	50A		65A		50A	
Standard						
2	2-1437382-6	B102	2-1437382-8	B102S	2-1437381-0	2B102
4	3-1437382-0	B104	3-1437382-6	B104S	2-1437381-2	2B104
6	4-1437382-0	B106-BU	4-1437382-5	B106S	2-1437381-6	2B106
8	4-1437382-9	B108	5-1437382-5	B108S	3-1437381-0	2B108
12	5-1437382-9	B112-BU	6-1437382-7	B112S	3-1437381-3	2B112
Shorting*						
2	4-1437381-0	3B102P	—	—	5-1437381-6	4B102P
4	4-1437381-1	3B104P	—	—	5-1437381-7	4B104P
6	4-1437381-3	3B106P	—	—	5-1437381-8	4B106P
8	4-1437381-5	3B108P	—	—	5-1437381-9	4B108P
12	4-1437381-7	3B112P	—	—	6-1437381-0	4B112P

Circuits	Strap Screw #8 & Smaller		Threaded Post & Nut	
Removable Link				
2	8-1437381-4	5B102	—	—
4	8-1437381-5	5B104	—	—
6	8-1437381-7	5B106	—	—
8	8-1437381-8	5B108	—	—
12	9-1437381-0	5B112	—	—
Stud, #10-32				
2	—	—	1-1437382-8	7B102
4	—	—	2-1437382-0	7B104
6	—	—	2-1437382-1	7B106
8	—	—	2-1437382-2	7B108
12	—	—	2-1437382-3	7B112

Notes:
For prenumbered marking strip, add suffix "N" to Catalog Number. Cannot be used on 3B or 4B series.

For factory assembled hinged cover, add suffix "H" to Catalog Number. Cannot be used on 3B or 4B series.

For factory assembled thumbscrew-fastened cover, add suffix "T" to Catalog Number. Cannot be used on 3B or 4B series.

Screws and removable links shipped unassembled.

*Shorting blocks are supplied with 2 shorting screws each.

Except for 3B and 4B Series

LR25557 E63810

Catalog 1308389
Revised 6-07

www.tycoelectronics.com

Dimensions are in millimeters and inches unless otherwise specified.

Dimensions are shown for reference purposes only. Specifications subject to change.

USA: 1-800-522-6752
Canada: 1-905-470-4425
Mexico: 01-800-733-8926
C. America: 52-55-1106-0803

South America: 55-11-2103-6000
Hong Kong: 852-2735-1628
Japan: 81-44-844-8013
UK: 8706-080-208

Note: All part numbers are RoHS Compliant.

B100, #B100 Series, One-Piece Blocks, 600 V — Phenolic Accessories

Covers and Marking

Circuits	Laminated Phenolic Cover		Shorting Block Cover		White Marking Strip		Numbered Marking Strip	
	Part Number	Catalog Number	Part Number	Catalog Number	Part Number	Catalog Number	Part Number	Catalog Number
2	7-1437382-5	C102-BU	9-1437382-2	CS102	1-1437383-5	S102	1776733-2	N102
4	7-1437382-6	C104-BU	9-1437382-3	CS104	1-1437383-6	S104	1-1437383-1	N104
6	7-1437382-7	C106-BU	9-1437382-4	CS106	1-1437383-7	S106	1-1437383-2	N106
8	7-1437382-8	C108-BU	9-1437382-5	CS108	1-1437383-8	S108	1-1437383-3	N108
12	7-1437382-9	C112-BU	9-1437382-6	CS112	1-1437383-9	S112	1-1437383-4	N112

Jumpers

Hardware

Circuits	30A Copper Jumpers		50A 12 Circuit Jumpers		Connecting Link		Lock Nuts		Shorting Screw	
	Part No.	Catalog No.	Part No.	Catalog No.	Part No.	Catalog No.	Part No.	Catalog No.	Part No.	Catalog No.
2	1437383-2	J102	—	—	—	—	—	—	—	—
4	1437383-3	J104	—	—	—	—	—	—	—	—
6	1437383-4	J106	—	—	—	—	—	—	—	—
8	1437383-5	J108	—	—	—	—	—	—	—	—
12	1437383-6	J112	1437395-9	HJ112	—	—	—	—	—	—
Hardware										
—	—	—	—	—	9-1437382-0	CL101	1437383-7	LN101-BU	7-1437381-7	51-BU

Related Product Data

Wire Pins and Ferrules—Pages 109-111
For more information on AMP Standard Terminals and Splices or Quick-Connect FASTON Receptacles and Tabs, request Catalog 82042.

LR25557 E63810

Catalog 1308389
Revised 6-07

www.tycoelectronics.com

Dimensions are in millimeters and inches unless otherwise specified.

Dimensions are shown for reference purposes only. Specifications subject to change.

USA: 1-800-522-6752
Canada: 1-905-470-4425
Mexico: 01-800-733-8926
C. America: 52-55-1106-0803

South America: 55-11-2103-6000
Hong Kong: 852-2735-1628
Japan: 81-44-844-8013
UK: 8706-080-208

Note: All part numbers are RoHS Compliant.

B100, #B100 Series, One-Piece Blocks, 600 V — Phenolic

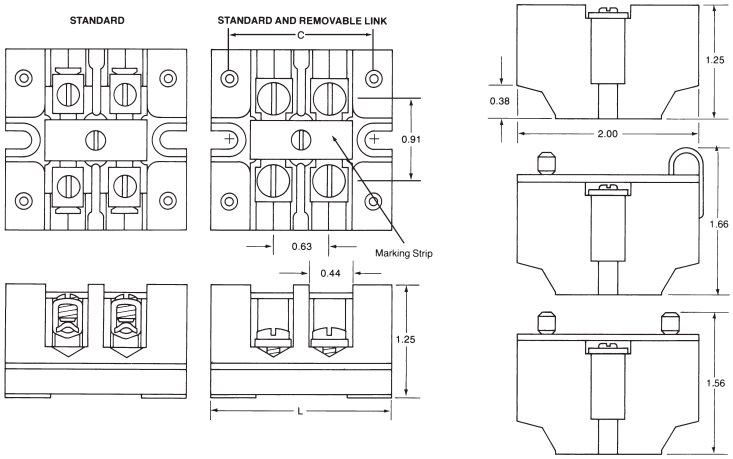

No. of Ckts.	C	L
2	1.63	2.00
4	2.88	3.25
6	4.13	4.50
8	5.38	5.75
12	7.88	8.25

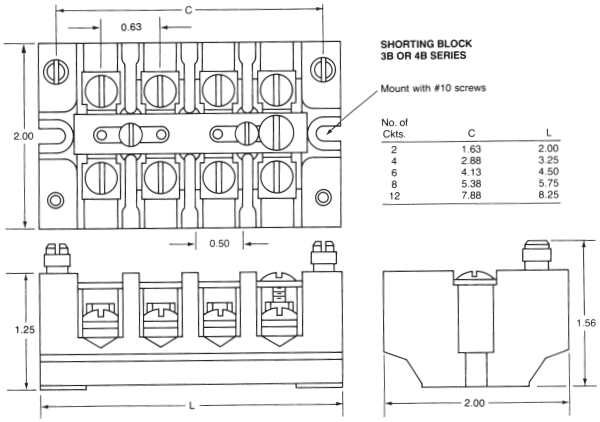

No. of Ckts.	C	L
2	1.63	2.00
4	2.88	3.25
6	4.13	4.50
8	5.38	5.75
12	7.88	8.25

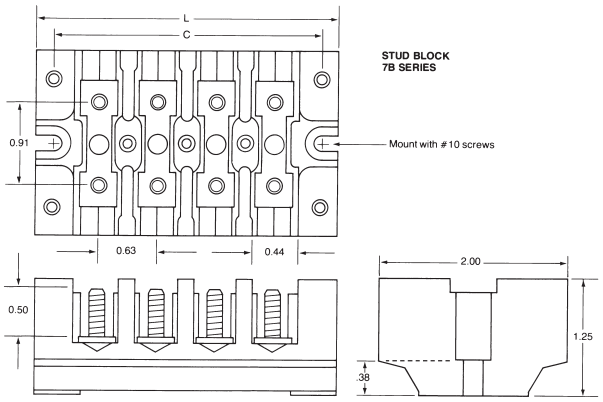

Dimensions are in millimeters and inches unless otherwise specified.

Dimensions are shown for reference purposes only. Specifications subject to change.

USA: 1-800-522-6752
Canada: 1-905-470-4425
Mexico: 01-800-733-8926
C. America: 52-55-1106-0803

South America: 55-11-2103-6000
Hong Kong: 852-2735-1628
Japan: 81-44-844-8013
UK: 8706-080-208

Note: All part numbers are RoHS Compliant.

Pre-Printed Marking Strips

Circuit identification is greatly simplified with the use of pre-printed strips for BUCHANAN terminal blocks. These hot-stamped strips are available for all snap-assembled sections (except Fuse, Switch, and Circuit Breaker models which are marked individually). The strips can be ordered separately or pre-installed on factory assembled sectional block units.

Unlike painted or screened letters, hot-stamped letters are designed to not rub or flake off during industrial use so that they will retain their legibility.

Marking strips are stamped with consecutive numbers that can be ordered to read from left-to-right or right-to-left, and in vertical or horizontal positions. Number sequences can begin with any number. This allows circuits to be identified in a manner most consistent with the terminal block application.

M 50 005 13 G

A B C D E

A **M** = Hot-Stamped Marking Strip

B **Terminal Block Series and Designator**

10 = Miniature or Single Tier
12 = Double Tier
67 = 900 Series Medium Duty
24 = Nylon Heavy Duty
21 = Phenolic Heavy Duty
80 = Intermediate Heavy Duty
40 = Ultra Heavy Duty
T2 = TSB230
T5 = TSB500
T6 = TSB1000
T7 = TSB2000

C **Number of Circuits to be Consecutively Numbered**

(Use three digits: Ex.: 005 = 5, 055 = 55, etc.)

D **Marking Style Options**

11 = 1 2 3 4 5...
12 = ...5 4 3 2 1
13 = ... 1 2 3 4 5
14 = ... 5 4 3 2 1

E **"First Number In Series" Designator***

A = 1	**F** = 6
B = 2	**G** = 7
C = 3	**H** = 8
D = 4	**J** = 9
E = 5	**K** = 0

Marking Strip Installed On A Factory-Assembled Terminal Block

615 005 11 A

A B C D

A **Basic Sectional Block Catalog #**

B **Number of Circuits to be Factory Assembled and Consecutively Numbered**

(Use three digits: Ex: 005 = 5, 055 = 55, etc.)

C **Marking Style Options**

11 = 1 2 3 4 5...
12 = ...5 4 3 2 1
13 = 1 2 3 4 5...
14 = ... 5 4 3 2 1

D **"First Number In Series" Designator***

A = 1	**F** = 6
B = 2	**G** = 7
C = 3	**H** = 8
D = 4	**J** = 9
E = 5	**K** = 0

* Letters in this position designate the first number to be used in the consecutive sequence. Ex.: "A" would start the sequence with the number 1. "EK" would start the sequence with the number 50. "BKK" would start the series with 200. For non-sequential numbering and special characters, consult Technical Support.

Catalog 1308389
Revised 6-07

www.tycoelectronics.com

Dimensions are in millimeters and inches unless otherwise specified.

Dimensions are shown for reference purposes only. Specifications subject to change.

USA: 1-800-522-6752
Canada: 1-905-470-4425
Mexico: 01-800-733-8926
C. America: 52-55-1106-0803

South America: 55-11-2103-6000
Hong Kong: 852-2735-1628
Japan: 81-44-844-8013
UK: 8706-080-208

Note: All part numbers are RoHS Compliant.

Technical Summary

Cat. No.	Terminal Block or Product Line	Contact Type Material Plate	Screw Style	Screw Slot Size	Screw Material & Plating	Recommended Screwdriver Dimensions Tip Thick	Recommended Screwdriver Dimensions Tip Width	Wire Strip Length	Wire Range AWG	Rec. Torque in. - lb.
105-BU 115 125-BU	High Density Tubular Clamp	Electroplated Tubular Copper Contact	6-32 Slotted Head Screw	033" Wide x .040" Deep [.84 x 1.02] Steel	Steel Electroplated	.020" [.51]	9/64" [.02]	5/16" [7.94]	#12-30	10
211 241	HeavyDuty Strap Screw	Copper Alloy Strap Electroplated	Binding Head 10-32 Thread	062" Wide x 062" Deep [1.57 x 1.57]	"	.037" [.94]	1/4" [6.35]	As Needed for Lugging	#8 or Smaller	12
212 222-BU 242	Heavy Duty Tubular Screw	Electroplated Tubular Copper Contact	Headless 1/4"-28 Thd. Slotted	3/64" Wide x 1/16" Deep [1.19 x 1.59]	"	"	"	1/2" [12.7]	#4-18	35
213 243	Heavy Duty Tubular Clamp	"	"	"	"	"	"		#6-18	35
218 248	Heavy Duty Strap Clamp	Copper Alloy Strap Electroplated	Pan Head Saddle Clamp 8-32 Thd.	3/64" Wide x 3/64" Deep [1.19 x 1.19]	"	"	"		#8-18	12
351 361 0311	Fuse Block Strap Screw	Copper Alloy Electroplated Spring Temper	Binding Head 8-32 Thd.		"	"	"	As Needed for Lugging	#8 or Smaller	10
358 368 318	Fuse Block Strap Clamp	"	Pan Head w/SaddleClp. 8-32 Thd.		"	"	"	1/2" [12.7]	#8-18	"
352 362-BU 312	Fuse Block Tubular Screw	Same as above except use H.D. Tubular Contact	Headless 1/4"-28 Thd. slotted		"	"	"	"	"	"
341 371 342	Switch Block Strap Screw	CopperAlloy Electroplated Spring Temper			"	"	"	As Needed for Lugging	#8 or Smaller	"
348 0378	Switch Block Strap Clamp	"	Pan Head w/SaddleClp 8-32 Thd.		"	"	"	1/2" [12.7]	#8-18	
342 0372	Switch Block Tubular Screw	Same as above except use H D. Tubular Contact			"	"	"	"	"	
416 426-BU	Extra Heavy Duty Tubular Screw	Electroplated-Tubular Copper Contact	1/2"-13 Hex Socket Hd. Set Screw	1/4" [6.35] Hex	"	1/2" [12.7] Hex	T-Bar Key	7/8" [22.23]	#12-2/0	200

Note: Representative Catalog Numbers Listed.

Dimensions are in millimeters and inches unless otherwise specified.

Dimensions are shown for reference purposes only. Specifications subject to change.

USA: 1-800-522-6752
Canada: 1-905-470-4425
Mexico: 01-800-733-8926
C. America: 52-55-1106-0803

South America: 55-11-2103-6000
Hong Kong: 852-2735-1628
Japan: 81-44-844-8013
UK: 8706-080-208

Note: All part numbers are RoHS Compliant.

Technical Summary (Continued)

Cat. No.	Terminal Block or Product Line	Contact Type Material plate	Screw Style	Screw Slot Size	Screw Material & Plating	Recommended Screwdriver Dimensions Tip Thick	Recommended Screwdriver Dimensions Tip Width	Wire Strip Length	Wire Range AWG	Rec. Torque in. - lb.
417 427-BU	Extra HD Tubular Screw	Electroplated Tubular Copper Contact	3/4"-16 Hex Socket Head Set Screw	3/8" Hex [9.53]	Steel Electroplated	3/8" Hex [9.53]	KeyT-Bar	1" [25.4]	#6-250	375 kcmil (MCM)
517 617 717	Medium Duty Quick-Connect	1/4" Wide QC .032" Thk Copper Alloy Electroplated	N/A	N/A	N/A	N/A	N/A	N/A	N/A	N/A
1546235-1	Medium Duty Tubular Clamp	Electroplated Tubular Copper Contact	10-32 Slotted Hd	.046" Wide x .046"Deep [1.17 x 1.17]	Steel Electroplated	.032" [.81]	3/16" [4.76]	11/32" [8.73]	#10-22	8
1546152-1	Medium Duty QC & Tubular Screw	1/4" Wide QC .032" Thk. Tubular Contact Both Copper Alloy Electroplated	"	"	"	"	"	"	#8-18	10
1546148-1	Medium Duty Tubular Screw	Electroplated Tubular Copper Contact	"	"	"	"	"	"		8
1546143-1	Medium Duty Strap Screw	Copper Alloy Strap Electroplated	6-32 Thd. Slotted Binding Hd.	3/64" Wide x 3/64" Deep [1.19 x 1.19]	"	"	"	As Needed for Lugging	#8 or Smaller	12
824-BU	Intermediate Tubular Screw	Electroplated Tubular Copper Contact	7/16"-20Thd. Slotted Headless	5/64" Wide x 5/64" Deep [1.98 x 1.98]	"	.041" [1.04]	3/8" [9.53]	11/16" [17.46]	#12-1/0	50
B102 B112-BU	One-Piece Blk. Strap Screw	Copper Alloy Strap Electroplated	10-32 Thd. Slotted Binding Hd.	1/16" Wide x 1/16" Deep [1.59 x 1.59]	"	.037" [.94]	1/4" [6.35]	As Needed for Lugging	#8 or Smaller	20
B102S B112S	One-Piece Blk. Tubular Contact	Tubular Contact	1/4" -28 Thd. Headless Set Screw	3/64" Wide x 3/64" Deep [1.19 x 1.19]	"	"	"	1/2" [12.7]	#6-14	45

Note: Representative Catalog Numbers Listed.

Note: All part numbers are RoHS Compliant.

UL 1059 Basic Voltage Rating

Voltage ratings of terminal blocks are based on the minimum spacing between electrical conductive parts of opposite polarity or between an electrically conductive part and a metal mounting surface measured under two conditions: Through Air, defined as the distance an arc must take through the air to go from one live conductor to another or from a live conductor to ground; and Over Surface, defined as the distance an arc must take over a surface of the insulating material going from one terminal to ground, assuming the arc will travel along the surface rather than through the air. The following chart shows UL 1059 spacing requirements in inches.

Voltage Rating

Description	Voltage	Spacing Requirements	
		Thru Air	Over Surface
Class A Service equipment including deadfront switchboards, panel boards, service entrance devices, etc.	51 - 150 151 - 300 251 - 600	1/2 [12.7] 3/4 [19.05] 1 [25.4]	3/4 [19.05] 1 1/4 [31.75] 2 [50.8]
Class B Commercial appliances including business equipment, electronic data processing equipment and the like	51 - 150 151 - 300 251 - 600	1/16 [1.59] 3/32 [2.38] 3/8 [9.53]	1/16 [1.59] 3/32 [2.38] 1/2 [12.7]
Class C General industrial and machine tools; controls which can be further defined as equipment falling under UL508	51 - 150 151 - 300 301 - 600	1/8 [3.18] 1/4 [6.35] 3/8 [9.53]	1/4 [6.35] 3/8 [9.53] 1/2 [12.7]
Devices having limited ratings[a]	51 - 300 301 - 600	1/16 [1.59] 3/16 [4.76]	1/8 [3.18] 3/8 [9.53]

[a]Load on any single circuit can not exceed 15 A at 51-150 V, 10 A at 151-300 V, 5 A at 301-600 V or the maximum current rating, whichever is less.

Standard Test Criteria

Test	Per:
Heat Cycling (term)	UL486E Section 10
Static Heating (term)	UL486E Section 11
Secureness	UL486E Section 12
Pullout	UL486E Section 14
Heating Test (block)	UL1059 Section 10
Dielectric Withstand	UL1059 Section 11
Strength of Base	UL1059 Section 13
Tab Pull	UL1059 Section 14
VPTA	UL1059 Section 15
Salt Spray	MIL-202 Method 101
Solderability	MIL-202 Method 208
Solvents	MIL-202 Method 215

Dimensions are in millimeters and inches unless otherwise specified.

Dimensions are shown for reference purposes only. Specifications subject to change.

USA: 1-800-522-6752
Canada: 1-905-470-4425
Mexico: 01-800-733-8926
C. America: 52-55-1106-0803

South America: 55-11-2103-6000
Hong Kong: 852-2735-1628
Japan: 81-44-844-8013
UK: 8706-080-208

Компания «ЭлектроПласт» предлагает заключение долгосрочных отношений при поставках импортных электронных компонентов на взаимовыгодных условиях!

Наши преимущества:

- Оперативные поставки широкого спектра электронных компонентов отечественного и импортного производства напрямую от производителей и с крупнейших мировых складов;
- Поставка более 17-ти миллионов наименований электронных компонентов;
- Поставка сложных, дефицитных, либо снятых с производства позиций;
- Оперативные сроки поставки под заказ (от 5 рабочих дней);
- Экспресс доставка в любую точку России;
- Техническая поддержка проекта, помощь в подборе аналогов, поставка прототипов;
- Система менеджмента качества сертифицирована по Международному стандарту ISO 9001;
- Лицензия ФСБ на осуществление работ с использованием сведений, составляющих государственную тайну;
- Поставка специализированных компонентов (Xilinx, Altera, Analog Devices, Intersil, Interpoint, Microsemi, Aeroflex, Peregrine, Syfer, Eurofarad, Texas Instrument, Miteq, Cobham, E2V, MA-COM, Hittite, Mini-Circuits,General Dynamics и др.);

Помимо этого, одним из направлений компании «ЭлектроПласт» является направление «Источники питания». Мы предлагаем Вам помощь Конструкторского отдела:

- Подбор оптимального решения, техническое обоснование при выборе компонента;
- Подбор аналогов;
- Консультации по применению компонента;
- Поставка образцов и прототипов;
- Техническая поддержка проекта;
- Защита от снятия компонента с производства.

Как с нами связаться

Телефон: 8 (812) 309 58 32 (многоканальный)
Факс: 8 (812) 320-02-42
Электронная почта: org@eplast1.ru
Адрес: 198099, г. Санкт-Петербург, ул. Калинина, дом 2, корпус 4, литера А.