# Rectangular Style Analog Panel Meters

MADE IN THE USA SINCE 1936 RELIABILITY BEYOND MEASURE

- **UL Recognized - File # E91015 Except for the Wattmeters & Frequency Meters**
- **Plastic case with Glass Window**
- **Calibration not affected when mounted on steel**
- **Three popular sizes: 2-1/2”, 3-1/2”, 4-1/2”**

**For Specifications and Dimensions see the last pages**

## Ordering Information

| Frequency, Self-Shielding Movement Not | | | | |
|---|---|---|---|---|
| | | Model / Size and Catalog Number | | |
| Range | Voltage | 2-1/2” Model 187 | 3-1/2” Model 87 | 4-1/2” Model 89 |
| 45-55 Hz | 120V | 35136 | 35142 | 35148 |
| 55-65 Hz | 120V | 35138 | 35144 | 35150 |
| 380-420 Hz | 120V | 35140 | 35146 | 35152 |
| | | | | |
| 45-55 Hz | 240V | 35137 | 35143 | 35149 |
| 55-65 Hz | 240V | 35139 | 35145 | 35151 |
| 380-420 Hz | 240V | 35141 | 35147 | 35153 |

## Ordering Information

| 4-20 mA Process Meters, Dial Indicates 0-100% | | | | |
|---|---|---|---|---|
| Size | Style | Model | Approx. Impedance (Ohms) | Catalog No. |
| 3-1/2” | Rectangular | 27 | 5.0 | 35023 |
| 4-1/2” | Rectangular | 29 | 5.0 | 35024 |

| Wattmeters, Self Shielding Movement | | | | | Not |
|---|---|---|---|---|---|
| Range | Maximum | | Model / Size and Catalog Number | | |
| | Volts | Amps | 2-1/2” Model 177 | 3-1/2” Model 77 | 4-1/2” Model 79 |
| 0-20 | 150 | .400 | < > | < > | 10714 |
| 0-75 | 150 | 1.0 | 10860 | 10650 | 10720 |
| 0-150 | 150 | 2.0 | < > | < > | 10730 |
| 0-300 | 150 | 4.0 | < > | < > | 10740 |
| 0-600 | 300 | 4.0 | < > | 10680 | 10750 |
| 0-750 | 150 | 10.0 | 10900 | 10690 | 10760 |
| 0-1500 | 300 | 10.0 | 10910 | 10700 | 10770 |
| 0-3000 | 300 | 20.0 | 10920 | 10710 | 10780 |
| < > Available on special order | | | | | |

## Ordering Information

| DC Voltmeters, Self-Shielding Movement | | | | |
|---|---|---|---|---|
| Range | Approx. Impedance (Ohms) @ 60 Hz | Model / Size and Catalog Number | | |
| | | 2-1/2" Model 127 | 3-1/2" Model 27 | 4-1/2" Model 29 |
| 0-1.5 | 1000 Ohms per Volt | 09020 | 07290 | 07620 |
| 0-3 | | 09030 | 07300 | 07630 |
| 0-5 | | 09040 | 07310 | 07640 |
| 0-8 | | 09050 | < > | 07650 |
| 0-10 | | 09060 | 07330 | 07660 |
| 0-15 | | 09080 | 07350 | 07670 |
| 0-25 | | 09090 | 07360 | 07680 |
| 0-30 | | 09100 | 07370 | 07690 |
| 0-50 | | 09110 | 07380 | 07700 |
| 0-100 | | 09130 | 07400 | 07710 |
| 0-150 | | 09140 | 07410 | 07720 |
| 0-200 | | 09160 | 07430 | 07730 |
| 0-250 | | 09170 | 07440 | 07740 |
| 0-300 | | 09180 | 07450 | 07750 |
| 0-500 | 2000 Ohms per Volt | 09200 | 07470 | 07760 |
| 0-750 | | < > | 07490 | 07770 |
| 0-1000 | | < > | 07495 * | 07780 * |
| 0-1500 | | < > | 07520 * | 07790 * |
| 0-2000 | | 09225 * | 07530 * | 07800 * |
| 0-2500 | | < > | 07550 * | 07810 * |
| 0-3000 | | < > | 07560 * | 07820 * |
| 0-4000 | | < > | < > | 07830 * |
| 0-5000 | | < > | 07600 * | 07840 * |
| < > Available on special order | | | | |
| * External multipliers (Model 183) are furnished on 2-1/2" DC meters 750 volts or higher and on 3-1/2" and 4-1/2" DC Meters 1000 volts or higher | | | | |

## Ordering Information

| DC Millivoltmeters, Self-Shielding Movement | | | | |
|---|---|---|---|---|
| Range | Approx. Impedance (Ohms) @ 60 Hz | Model / Size and Catalog Number | | |
| | | 2-1/2" Model 127 | 3-1/2" Model 27 | 4-1/2" Model 29 |
| 0-50 | 10.0 | 06990 | 06930 | 06950 |
| 0-100 | 20.0 | < > | 06940 | 06960 |
| < > Available on special order | | | | |

| DC Taut-Band Microammeters, Self-Shielding Movement | | | | |
|---|---|---|---|---|
| Range | Approx. Impedance (Ohms) @ 60 Hz | Model / Size and Catalog Number | | |
| | | 2-1/2" Model 127T | 3-1/2" Model 27T | 4-1/2" Model 29T |
| 0-10 | 4900 | 04246 | 03839 | 03939 |
| 0-15 | 1960 | 04248 | 03841 | 03941 |
| 0-25 | 1960 | 04251 | 03851 | 03951 |
| 0-50 | 960 | 04261 | 03961 | 03961 |
| 0-100 | 500 | < > | 03871 | 03971 |
| < > Available on special order | | | | |

## Ordering Information

| DC Microammeters, Self-Shielding Movement | | | | |
|---|---|---|---|---|
| Range | Approx. Impedance (Ohms) @ 60 Hz | Model / Size and Catalog Number | | |
| | | 2-1/2" Model 127 | 3-1/2" Model 27 | 4-1/2" Model 29 |
| 0-50 | 1800 | 04260 | 03860 | 03960 |
| 0-100 | 1800 | 04270 | 03870 | 03970 |
| 0-200 | 1100 | 04280 | 03880 | 03980 |
| 0-500 | 90 | < > | 03890 | 03990 |
| 25-0-25 | 1800 | 04243 | 03900 | 04000 |
| 50-0-50 | 1800 | 04245 | 03910 | 04010 |
| 100-0-100 | 1100 | 04247 | 03920 | 04020 |
| 500-0-500 | 43 | < > | 03930 | 04030 |
| < > Available on special order | | | | |

| DC Milliammeters, Self-Shielding Movement | | | | |
|---|---|---|---|---|
| Range | Approx. Impedance (Ohms) @ 60 Hz | Model / Size and Catalog Number | | |
| | | 2-1/2" Model 127 | 3-1/2" Model 27 | 4-1/2" Model 29 |
| 0-1 | 43.0 | 05760 | 04790 | 05070 |
| 0-1.5 | 43.0 | < > | 04810 | 05080 |
| 0-3 | 2.0 | 05790 | 04820 | 05090 |
| 0-5 | 2.0 | 05800 | 04830 | 05100 |
| 0-10 | 10.0 | 05810 | 04840 | 05110 |
| 0-15 | 6.6 | 05830 | 04860 | 05120 |
| 0-20 | 5.0 | < > | 04880 | 05130 |
| 0-25 | 4.0 | 05860 | 04890 | 05140 |
| 0-50 | 2.0 | 05880 | 04910 | 05150 |
| 0-75 | 1.3 | < > | < > | < > |
| 0-100 | 1.0 | 05910 | 04940 | 05170 |
| 0-150 | .66 | 05930 | 04960 | 05180 |
| 0-200 | .5 | 05940 | 04980 | 05190 |
| 0-250 | .4 | < > | 05000 | 05200 |
| 0-300 | .33 | < > | 05010 | 05210 |
| 0-500 | .2 | 05990 | 05030 | 05220 |
| 0-750 | .13 | < > | 05050 | 05230 |
| 0-1000 | .05 | 06020 | 05060 | 05240 |
| < > Available on special order | | | | |

## Ordering Information

| DC Ammeters, Self-Shielding Movement | | | | |
|---|---|---|---|---|
| Range | Approx. Impedance (Ohms) @ 60 Hz | Model / Size and Catalog Number | | |
| | | 2-1/2" Model 127 | 3-1/2" Model 27 | 4-1/2" Model 29 |
| 0-1 | .050 | 01680 | 00230 | 00450 |
| 0-1.5 | .033 | 01690 | 00240 | 00460 |
| 0-2 | .025 | 01709 | 00250 | 00470 |
| 0-3 | .0166 | 01710 | 00260 | 00480 |
| 0-5 | .010 | 01720 | 00270 | 00490 |
| 0-10 | .005 | 01730 | 00280 | 00500 |
| 0-15 | .0033 | 01740 | 00290 | 00512 |
| 0-25 | .0020 | 01750 | 00300 | 00520 |
| 0-30 | .0017 | 01760 | 00310 | 00530 |
| 0-50 | .001 | 01770 | 00320 | 00540 |
| 0-75 | 10.0 | 01780 † | 00330 † | 00550 † |
| 0-100 | 10.0 | 01790 † | 00340 † | 00560 † |
| 0-150 | 10.0 | 01800 † | 00350 † | 00570 † |
| 0-200 | 10.0 | 01810 † | < > | 00580 † |
| 0-250 | 10.0 | < > | < > | 00590 † |
| 0-300 | 10.0 | < > | 00380 † | 00600 † |
| 0-500 | 10.0 | < > | 00390 † | 00610 † |
| 0-750 | 10.0 | < > | 00400 † | 00620 † |
| 0-1000 | 10.0 | < > | 00410 † | 00630 † |
| 15-0-15 | .0033 | < > | < > | 00640 |
| 30-0-30 | .0017 | 01880 | 00430 | 00650 |
| 50-0-50 | .001 | 01890 | 00440 | 00660 |

< > Available on special order

† DC current meters are self-contained for ranges up to and including 50 amperes.

Higher range DC current meters (50 mV) listed above are calibrated for 5' leads and require external shunts.

## Ordering Information

| AC Microammeters Rectifier Type, Self-Shielding Movement | | | | |
|---|---|---|---|---|
| Range | Approx. Impedance (Ohms) @ 60 Hz | Model / Size and Catalog Number | | |
| | | 2-1/2" Model 147 | 3-1/2" Model 47 | 4-1/2" Model 49 |
| 0-100 | 3400 | < > | 04120 | 04160 |
| 0-200 | 2400 | < > | < > | 04170 |
| 0-300 | 1800 | < > | 04140 | 04180 |
| 0-500 | 1200 | < > | 04150 | 04190 |
| < > Available on special order | | | | |

| AC Milliammeters, Iron Vane Movement | | | | |
|---|---|---|---|---|
| Range | Approx. Impedance (Ohms) @ 60 Hz | Model / Size and Catalog Number | | |
| | | 2-1/2" Model 157 | 3-1/2" Model 57 | 4-1/2" Model 59 |
| 0-10 | 650.0 | < > | 05440 | 05510 |
| 0-15 | 887.0 | < > | 05499 | < > |
| 0-25 | 270.0 | < > | 05460 | 05530 |
| 0-50 | 80.0 | 06130 | 05470 | 05540 |
| 0-100 | 17.2 | 06140 | 05480 | 05550 |
| 0-250 | 3.1 | 06150 | 05490 | 05560 |
| 0-500 | .9 | 06152 | 05500 | 05570 |
| < > Available on special order | | | | |

## Ordering Information

| AC Milliammeters Rectifier Type, Self Shielding Movement | | | | |
|---|---|---|---|---|
| Range | Approx. Impedance (Ohms) @ 60 Hz | Model / Size and Catalog Number | | |
| | | 2-1/2" Model 147 | 3-1/2" Model 47 | 4-1/2" Model 49 |
| 0-1 | 600 | < > | 06850 | 06880 |
| 0-2 | 400 | < > | 06860 | 06890 |
| 0-5 | 200 | < > | 06870 | 06900 |
| < > Available on special order | | | | |

| AC Ammeters, Iron Vane Movement | | | | |
|---|---|---|---|---|
| Range | Approx. Impedance (Ohms) @ 60 Hz | Model / Size and Catalog Number | | |
| | | 2-1/2" Model 157 | 3-1/2" Model 57 | 4-1/2" Model 59 |
| 0-1 | .213 | 02270 | 01120 | 01290 |
| 0-1.5 | .105 | < > | 01130 | 01302 |
| 0-2 | .065 | 02290 | 01140 | 01310 |
| 0-3 | .028 | 02300 | 01145 | 01320 |
| 0-5 | .008 | 02310 | 01160 | 01330 |
| 0-10 | .004 | 02320 | 01170 | 01340 |
| 0-15 | .0025 | 02330 | 01180 | 01350 |
| 0-25 | .002 | 02340 | 01190 | 01360 |
| 0-30 | .0015 | 02350 | 01200 | 01370 |
| 0-50 | .001 | 02360 | 01210 | 01380 |
| 0-75 | .0002 | < > | 03434 | 03436 |
| 0-75 | .008 | 02370 † | < > | < > |
| 0-100 | .008 | 02380 † | 01230 † | 01400 † |
| 0-150 | .008 | 02390 † | 01240 † | 01410 † |
| 0-200 | .008 | < > | 01250 † | 01420 † |
| 0-250 | .008 | 02410 † | 01260 † | 01430 † |
| 0-300 | .008 | 02420 † | 01270 † | 01440 † |
| 0-500 | .008 | 02422 † | 01280 † | 01450 † |
| < > Available on special order | | | | |
| † These meters are 5 amp meters with scales as indicated and require external donut transformers | | | | |

## Ordering Information

| AC Voltmeters Rectifier Type, Self Shielding Movement | | | | |
|---|---|---|---|---|
| Range | Approx. Impedance (Ohms) @ 60 Hz | Model / Size and Catalog Number | | |
| | | 2-1/2" Model 147 | 3-1/2" Model 47 | 4-1/2" Model 49 |
| 0-1 | 2000 Ohms per Volt | < > | 08120 | 08300 |
| 0-3 | | < > | 08130 | 08310 |
| 0-5 | | < > | < > | 08320 |
| 0-10 | | < > | < > | 08330 |
| 0-15 | | < > | < > | 08340 |
| 0-50 | | < > | < > | 08350 |
| 0-100 | | < > | 08180 | 08360 |
| 0-150 | | < > | 08190 | 08370 |
| 0-300 | | < > | < > | 08371 |
| < > Available on special order | | | | |

| AC Voltmeters, Iron Vane Movement | | | | |
|---|---|---|---|---|
| Range | Approx. Impedance (Ohms) @ 60 Hz | Model / Size and Catalog Number | | |
| | | 2-1/2" Model 157 | 3-1/2" Model 57 | 4-1/2" Model 59 |
| 0-1.5 | 3 | < > | < > | 08710 |
| 0-3 | 12 | < > | 08540 | 08720 |
| 0-5 | 33 | 09390 | 08550 | 08730 |
| 0-10 | 133 | 09400 | 08566 | 08740 |
| 0-15 | 300 | 09420 | 08580 | 08750 |
| 0-25 | 833 | 09440 | 08599 | 08760 |
| 0-50 | 3,333 | 09450 | 08610 | 08770 |
| 0-100 | 16,166 | 09460 | 08620 | 08780 |
| 0-150 | 25,000 | 09470 | 08630 | 08790 |
| 0-250 | 41,166 | 09490 | 08650 | 08800 |
| 0-300 | 50,000 | 09500 | 08660 | 08810 |
| 0-500 | 83,333 | 09520 † | 08680 † | 08820 † |
| 0-750 | 125,000 | < > | 08690 † | 08830 † |
| 0-1000 | 166,666 | < > | 08700 † | 08840 † |
| † External multipliers, Model 183 are furnished on AC meters having a range of 500 volts or higher. All others have self contained multipliers. | | | | |
| < > Available on special order | | | | |

# Rectangular Style Analog Panel Meters

| Specifications | |
|---|---|
| Accuracy | ±2% full scale (iron-vane), ±3% (rectifier) |
| | |
| Wattmeters: | ±2% full scale; Compensated meters: ±3% full scale |
| | |
| Movement | Model 57, 59, 157 Iron-vane, magnetically damped<br>Wattmeters: Dynamometer<br>All others: Annular, rectifier type, self-shielding |
| Suspension | Pivot and jewel; "T" styles: taut band |
| Tracking | ±3% |
| Shielding | Calibration is unaffected by magnetic panel mounting |
| Response Time | 1.5 seconds maximum |
| Overload (1 sec.) | 10 times F.S. |
| Overload (Continuous) | 1.5 times F.S. |
| Repeatability | 2 %, tautband: .5% |
| Dial | Sharp clear scale. Each dial arc is calibrated to track the specific type of movement used |
| Resistance | ±15% of meter impedance |
| Pointer | Spade pointer with black, matte finish |
| | |
| Scale Length | Models 177 & 157: 1.6" (40.6mm) |
| | Models 147, 127 & 127T: 1.8" (45.7mm) |
| | Models 57 & 77: 2.3" (58.4mm) |
| | Models 27, 27T & 47: 2.5" (63.5mm) |
| | Models 59 & 79: 3.50" (89.0mm) |
| | Models 29, 29T & 49: 3.9" (99.0mm) |
| | |
| Net Weight | Models 57 & 157: 5 oz. (0.14 kg) |
| | Model 127, 127T & 147: 7 oz. (0.20 kg) |
| | Models 27, 27T, 47 & 59: 8 oz. (0.23 kg) |
| | Models 77 & 177: 9 0z. (0.26 kg) |
| | Models 29, 29T & 49: 11 oz. (0.31 kg) |
| | Model 79: 12 oz. (0.34 kg) |

| Frequency Meter Specifications | |
|---|---|
| Accuracy | 45-55 Hz ± 0.3 Hz (120V-240V) |
| | 55-65 Hz ± 0.3 Hz (120V-240V) |
| | 380-420 Hz ± 1.2 Hz (120V-240V) |
| | |
| Movement | Small core magnet, self-shielding |
| Suspension | Pivot and jewel |
| Shielding | Calibration is unaffected by magnetic panel mounting |
| Center Scale Value | 50/60/400 Hz |
| Power Consumption | 1.6 VA |
| Warm-up Time | 5 minutes |
| Max. Input: Voltage (10 sec) | 150, 120V normal |
| | 280, 240V normal |
| | |
| Dial | Sharp clear scale.<br>Each dial arc is calibrated to track the specific type of movement used |
| Case | High density black plastic |
| Operating Temperature | -4ºF to + 149ºF (-20ºC to + 65ºC) |
| Pointer | Spade pointer with black, matte finish |
| | |
| Scale Length | Model 187: 1.8” (45.7mm) |
| | Model 89: 3.5” (89.0mm) |
| | Model 87: 3.9” (99.0mm) |
| | |
| Net Weight | Model 187: 5 oz. (0.14 kg) |
| | Model 87: 8 oz. (0.23 kg) |
| | Model 89: 11 oz. (0.31 kg) |

# Rectangular Style Analog Panel Meters

MADE IN THE USA SINCE 1936 RELIABILITY BEYOND MEASURE

## Dimensions

### 3-1/2" Model 27 & 27T, 47, 57, & 87

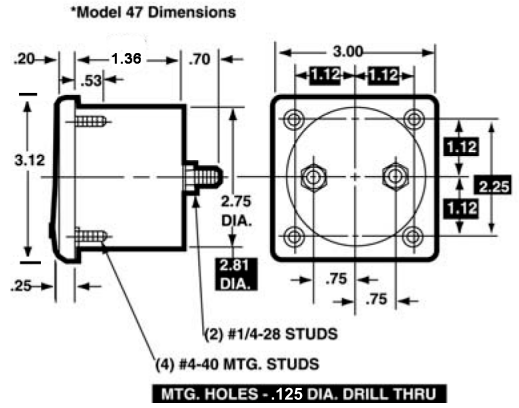


### 3-1/2" Model 77

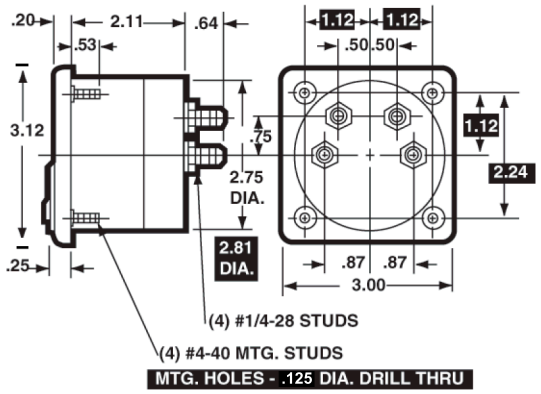


### 4-1/2" Model 29 & 29T, 49, 59, & 89

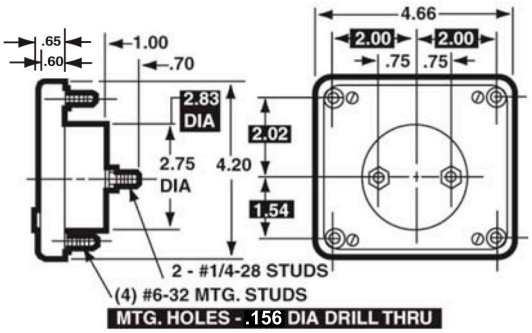


### 4-1/2" Model 79

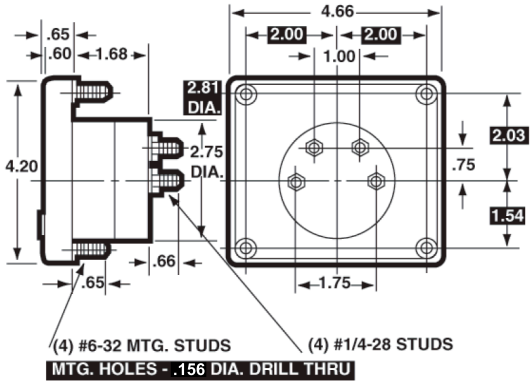


### 2-1/2" Model 177

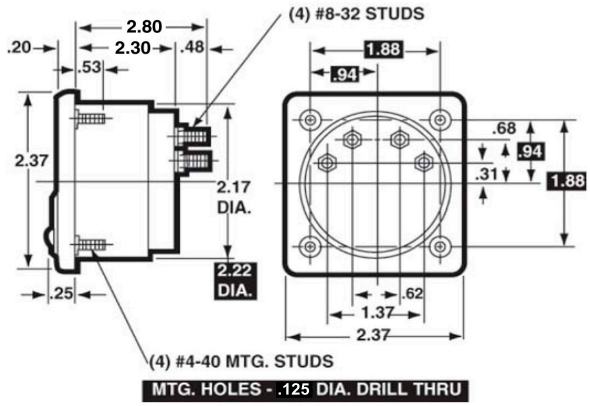


### 2-1/2" Model 127 & 127T, 147, 157, & 187

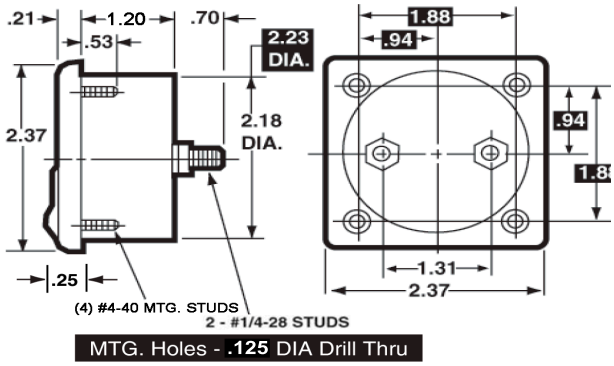

Компания «ЭлектроПласт» предлагает заключение долгосрочных отношений при поставках импортных электронных компонентов на взаимовыгодных условиях!

Наши преимущества:

- Оперативные поставки широкого спектра электронных компонентов отечественного и импортного производства напрямую от производителей и с крупнейших мировых складов;
- Поставка более 17-ти миллионов наименований электронных компонентов;
- Поставка сложных, дефицитных, либо снятых с производства позиций;
- Оперативные сроки поставки под заказ (от 5 рабочих дней);
- Экспресс доставка в любую точку России;
- Техническая поддержка проекта, помощь в подборе аналогов, поставка прототипов;
- Система менеджмента качества сертифицирована по Международному стандарту ISO 9001;
- Лицензия ФСБ на осуществление работ с использованием сведений, составляющих государственную тайну;
- Поставка специализированных компонентов (Xilinx, Altera, Analog Devices, Intersil, Interpoint, Microsemi, Aeroflex, Peregrine, Syfer, Eurofarad, Texas Instrument, Miteq, Cobham, E2V, MA-COM, Hittite, Mini-Circuits,General Dynamics и др.);

Помимо этого, одним из направлений компании «ЭлектроПласт» является направление «Источники питания». Мы предлагаем Вам помощь Конструкторского отдела:

- Подбор оптимального решения, техническое обоснование при выборе компонента;
- Подбор аналогов;
- Консультации по применению компонента;
- Поставка образцов и прототипов;
- Техническая поддержка проекта;
- Защита от снятия компонента с производства.

**Как с нами связаться**

**Телефон:** 8 (812) 309 58 32 (многоканальный)
**Факс:** 8 (812) 320-02-42
**Электронная почта:** org@eplast1.ru
**Адрес:** 198099, г. Санкт-Петербург, ул. Калинина, дом 2, корпус 4, литера А.