# ZL50020
# Enhanced 2 K Digital Switch

Data Sheet

## Features

November 2006

- 2048 channel x 2048 channel non-blocking digital Time Division Multiplex (TDM) switch at 8.192 Mbps and 16.384 Mbps or using a combination of ports running at 2.048, 4.096, 8.192 and 16.384 Mbps
- 32 serial TDM input, 32 serial TDM output streams
- Output streams can be configured as bi-directional for connection to backplanes
- Exceptional input clock cycle to cycle variation tolerance (20 ns for all rates)
- Per-stream input and output data rate conversion selection at 2.048, 4.096, 8.192 or 16.384 Mbps. Input and output data rates can differ
- Per-stream high impedance control outputs (STOHZ) for 16 output streams
- Per-stream input bit delay with flexible sampling point selection
- Per-stream output bit and fractional bit advancement

**Ordering Information**

| | | |
|---|---|---|
| ZL50020GAC | 256 Ball PBGA | Trays |
| ZL50020QCC | 256 Lead LQFP | Trays |
| ZL50020QCG1 | 256 Lead LQFP* | Trays, Bake & Drypack |
| ZL50020GAG2 | 256 Ball PBGA** | Trays, Bake & Drypack |

*Pb Free Matte Tin
**Pb Free Tin/Silver/Copper

**-40°C to +85°C**

- Per-channel ITU-T G.711 PCM A-Law/μ-Law Translation
- Four frame pulse and four reference clock outputs
- Three programmable delayed frame pulse outputs
- Input clock: 4.096 MHz, 8.192 MHz, 16.384 MHz
- Input frame pulses:61 ns, 122 ns, 244 ns
- Per-channel constant or variable throughput delay for frame integrity and low latency applications
- Per Stream (32) Bit Error Rate Test circuits complying to ITU-O.151

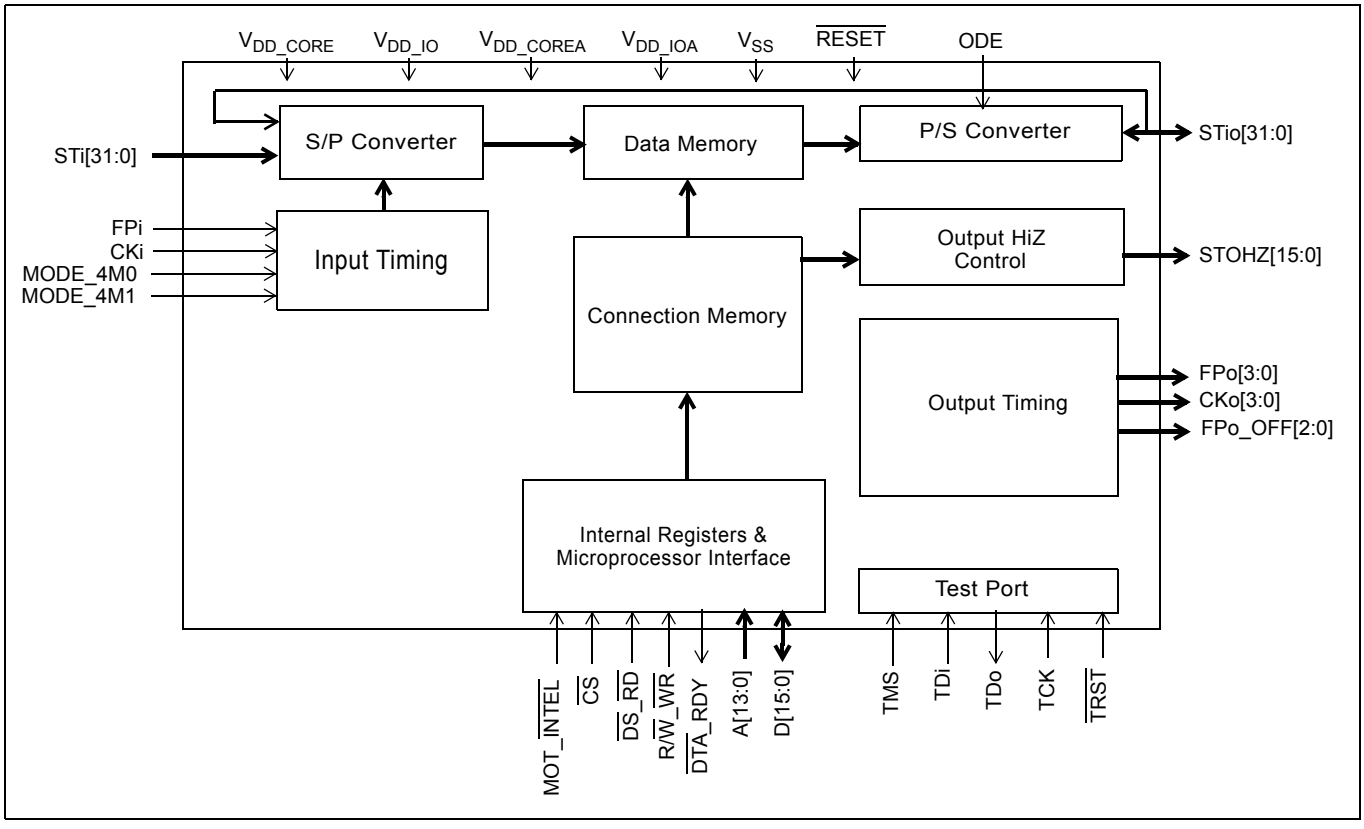


**Figure 1 - ZL50020 Functional Block Diagram**



Zarlink Semiconductor Inc.
Zarlink, ZL and the Zarlink Semiconductor logo are trademarks of Zarlink Semiconductor Inc.
Copyright 2004-2006, Zarlink Semiconductor Inc. All Rights Reserved.

- Per-channel high impedance output control
- Per-channel message mode
- Control interface compatible with Intel and Motorola 16-bit non-multiplexed buses
- Connection memory block programming
- Supports ST-BUS and GCI-Bus standards for input and output timing
- IEEE-1149.1 (JTAG) test port
- 3.3 V I/O with 5 V tolerant inputs; 1.8 V core voltage

## Applications

- PBX and IP-PBX
- Small and medium digital switching platforms
- Remote access servers and concentrators
- Wireless base stations and controllers
- Multi service access platforms
- Digital Loop Carriers
- Computer Telephony Integration

## Description

The ZL50020 is a maximum 2048 x 2048 channel non-blocking digital Time Division Multiplex (TDM) switch. It has thirty-two input streams (STi0 - 31) and thirty-two output streams (STio0 - 31). The device can switch 64 kbps and Nx64 kbps TDM channels from any input stream to any output stream. Each of the input and output streams can be independently programmed to operate at any of the following data rates: 2.048 Mbps, 4.096 Mbps, 8.192 Mbps or 16.384 Mbps. The ZL50020 provides up to sixteen high impedance control outputs (STOHZ0 - 15) to support the use of external tristate drivers for the first sixteen output streams (STio0 - 15). The output streams can be configured to operate in bi-directional mode, in which case STi0 - 31 will be ignored.

The device contains two types of internal memory - data memory and connection memory. There are four modes of operation - Connection Mode, Message Mode, BER mode and high impedance mode. In Connection Mode, the contents of the connection memory define, for each output stream and channel, the source stream and channel (the actual data to be output is stored in the data memory). In Message Mode, the connection memory is used for the storage of microprocessor data. Using Zarlink's Message Mode capability, microprocessor data can be broadcast to the data output streams on a per-channel basis. This feature is useful for transferring control and status information for external circuits or other TDM devices. In BER mode the output channel data is replaced with a pseudorandom bit sequence (PRBS) from one of 32 PRBS generators that generates a $2^{15}$-1 pattern. On the input side channels can be routed to one of 32 bit error detectors. In high impedance mode the selected output channel can be put into a high impedance state.

The configurable non-multiplexed microprocessor port allows users to program various device operating modes and switching configurations. Users can employ the microprocessor port to perform register read/write, connection memory read/write, and data memory read operations. The port is configurable to interface with either Motorola or Intel-type microprocessors.

The device also supports the mandatory requirements of the IEEE-1149.1 (JTAG) standard via the test port.

# Table of Contents

**Features** . . . . . 1
**Applications** . . . . . 2
**Description** . . . . . 2
**Changes Summary** . . . . . 7
**1.0 Pinout Diagrams** . . . . . 8
1.1 BGA Pinout . . . . . 8
1.2 QFP Pinout . . . . . 9
**2.0 Pin Description** . . . . . 10
**3.0 Device Overview** . . . . . 16
**4.0 Data Rates and Timing** . . . . . 16
4.1 Input Clock (CKi) and Input Frame Pulse (FPi) Timing . . . . . 17
**5.0 ST-BUS and GCI-Bus Timing** . . . . . 19
**6.0 Output Timing Generation** . . . . . 19
**7.0 Data Input Delay and Data Output Advancement** . . . . . 22
7.1 Input Bit Delay Programming . . . . . 23
7.2 Input Bit Sampling Point Programming . . . . . 24
7.3 Output Advancement Programming . . . . . 26
7.4 Fractional Output Bit Advancement Programming . . . . . 27
7.5 External High Impedance Control Advancement . . . . . 28
**8.0 Data Delay Through the Switching Paths** . . . . . 28
8.1 Variable Delay Mode . . . . . 28
8.2 Constant Delay Mode . . . . . 29
**9.0 Connection Memory Description** . . . . . 30
**10.0 Connection Memory Block Programming** . . . . . 31
10.1 Memory Block Programming Procedure . . . . . 31
**11.0 Device Operation in Divided Clock and Multiplied Clock Modes** . . . . . 31
11.1 Divided Clock Mode Operation . . . . . 32
11.2 Multiplied Clock Mode Operation . . . . . 32
11.3 Output Clock Frequencies . . . . . 32
**12.0 Microprocessor Port** . . . . . 33
**13.0 Device Reset and Initialization** . . . . . 33
13.1 Power-up Sequence . . . . . 33
13.2 Device Initialization on Reset . . . . . 33
13.3 Software Reset . . . . . 34
**14.0 Pseudo Random Bit Generation and Error Detection** . . . . . 34
**15.0 PCM A-law/m-law Translation** . . . . . 35
**16.0 Quadrant Frame Programming** . . . . . 35
**17.0 JTAG Port** . . . . . 36
17.1 Test Access Port (TAP) . . . . . 36
17.2 Instruction Register . . . . . 37
17.3 Test Data Registers . . . . . 37
17.4 BSDL . . . . . 37
**18.0 Register Address Mapping** . . . . . 38
**19.0 Detailed Register Description** . . . . . 39
**20.0 Memory** . . . . . 57
20.1 Memory Address Mappings . . . . . 57
20.2 Connection Memory Low (CM_L) Bit Assignment . . . . . 57
20.3 Connection Memory High (CM_H) Bit Assignment . . . . . 59
**21.0 DC Parameters** . . . . . 61

# Table of Contents

**22.0 AC Parameters . . . . . 62**

# List of Figures

Figure 1 - ZL50020 Functional Block Diagram . . . 1
Figure 2 - ZL50020 256-Ball 17 mm x 17 mm PBGA (as viewed through top of package) . . . 8
Figure 3 - ZL50020 256-Lead 28 mm x 28 mm LQFP (top view). . . . 9
Figure 4 - Input Timing when CKIN1 - 0 bits = “10” in the CR . . . 18
Figure 5 - Input Timing when CKIN1 - 0 bits = “01” in the CR . . . 18
Figure 6 - Input Timing when CKIN1 - 0 = “00” in the CR . . . 19
Figure 7 - Output Timing for CKo0 and FPo0 . . . 20
Figure 8 - Output Timing for CKo1 and FPo1 . . . 21
Figure 9 - Output Timing for CKo2 and FPo2 . . . 21
Figure 10 - Output Timing for CKo3 and FPo3 with CKoFPo3SEL1-0=”11” . . . 22
Figure 11 - Input Bit Delay Timing Diagram (ST-BUS). . . . 23
Figure 12 - Input Bit Sampling Point Programming . . . 24
Figure 13 - Input Bit Delay and Factional Sampling Point . . . 25
Figure 14 - Output Bit Advancement Timing Diagram (ST-BUS). . . . 26
Figure 15 - Output Fractional Bit Advancement Timing Diagram (ST-BUS) . . . 27
Figure 16 - Channel Switching External High Impedance Control Timing . . . 28
Figure 17 - Data Throughput Delay for Variable Delay . . . 29
Figure 18 - Data Throughput Delay for Constant Delay. . . . 30
Figure 19 - Timing Parameter Measurement Voltage Levels. . . . 62
Figure 20 - Motorola Non-Multiplexed Bus Timing - Read Access . . . 63
Figure 21 - Motorola Non-Multiplexed Bus Timing - Write Access. . . . 64
Figure 22 - Intel Non-Multiplexed Bus Timing - Read Access . . . 65
Figure 23 - Intel Non-Multiplexed Bus Timing - Write Access . . . 66
Figure 24 - JTAG Test Port Timing Diagram . . . 67
Figure 25 - Frame Pulse Input and Clock Input Timing Diagram (ST-BUS). . . . 69
Figure 26 - Frame Pulse Input and Clock Input Timing Diagram (GCI-Bus) . . . 69
Figure 27 - ST-BUS Input Timing Diagram when Operated at 2, 4, 8 Mbps . . . 70
Figure 28 - ST-BUS Input Timing Diagram when Operated at 16 Mbps . . . 71
Figure 29 - GCI-Bus Input Timing Diagram when Operated at 2, 4, 8 Mbps . . . 71
Figure 30 - GCI-Bus Input Timing Diagram when Operated at 16 Mbps . . . 72
Figure 31 - ST-BUS Output Timing Diagram when Operated at 2, 4, 8 or 16 Mbps . . . 73
Figure 32 - GCI-Bus Output Timing Diagram when Operated at 2, 4, 8 or 16 Mbps . . . 73
Figure 33 - Serial Output and External Control . . . 74
Figure 34 - Output Drive Enable (ODE). . . . 74
Figure 35 - Input and Output Frame Boundary Offset . . . 75
Figure 36 - FPo0 and CKo0 Timing Diagram. . . . 76
Figure 37 - FPo1 and CKo1 Timing Diagram. . . . 77
Figure 38 - FPo2 and CKo2 Timing Diagram. . . . 78
Figure 39 - FPo3 and CKo3 Timing Diagram. . . . 79
Figure 40 - Output Timing (ST-BUS Format) . . . 80

# List of Tables

Table 1 - CKi and FPi Configurations for Divided Clock Modes . . . 17
Table 2 - CKi and FPi Configurations for Multiplied Clock Mode . . . 17
Table 3 - Output Timing Generation . . . 19
Table 4 - Delay for Variable Delay Mode . . . 29
Table 5 - Connection Memory Low After Block Programming . . . 31
Table 6 - Connection Memory High After Block Programming . . . 31
Table 7 - ZL50020 Operating Modes . . . 32
Table 8 - Generated Output Frequencies . . . 32
Table 9 - Input and Output Voice and Data Coding . . . 35
Table 10 - Definition of the Four Quadrant Frames . . . 35
Table 11 - Quadrant Frame Bit Replacement . . . 36
Table 12 - Address Map for Registers (A13 = 0) . . . 38
Table 13 - Control Register (CR) Bits . . . 39
Table 14 - Internal Mode Selection Register (IMS) Bits . . . 41
Table 15 - Software Reset Register (SRR) Bits . . . 43
Table 16 - Output Clock and Frame Pulse Control Register (OCFCR) Bits . . . 44
Table 17 - Output Clock and Frame Pulse Selection Register (OCFSR) Bits . . . 45
Table 18 - FPo_OFF[n] Register (FPo_OFF[n]) Bits . . . 47
Table 19 - Internal Flag Register (IFR) Bits - Read Only . . . 48
Table 20 - BER Error Flag Register 0 (BERFR0) BIts - Read Only . . . 48
Table 21 - BER Error Flag Register 1 (BERFR1) Bits - Read Only . . . 49
Table 22 - BER Receiver Lock Register 0 (BERLR0) Bits - Read Only . . . 49
Table 23 - BER Receiver Lock Register 1 (BERLR1) Bits - Read Only . . . 50
Table 24 - Stream Input Control Register 0 - 31 (SICR0 - 31) Bits . . . 50
Table 25 - Stream Input Quadrant Frame Register 0 - 31 (SIQFR0 - 31) Bits . . . 52
Table 26 - Stream Output Control Register 0 - 31 (SOCR0 - 31) Bits . . . 54
Table 27 - BER Receiver Start Register [n] (BRSR[n]) Bits . . . 55
Table 28 - BER Receiver Length Register [n] (BRLR[n]) Bits . . . 55
Table 29 - BER Receiver Control Register [n] (BRCR[n]) Bits . . . 56
Table 30 - BER Receiver Error Register [n] (BRER[n]) Bits - Read Only . . . 56
Table 31 - Address Map for Memory Locations (A13 = 1) . . . 57
Table 32 - Connection Memory Low (CM_L) Bit Assignment when CMM = 0 . . . 57
Table 33 - Connection Memory Low (CM_L) Bit Assignment when CMM = 1 . . . 58
Table 34 - Connection Memory High (CM_H) Bit Assignment . . . 59

## Changes Summary

The following table captures the changes from January 2006 to November 2006.

| Page | Item | Change |
|---|---|---|
| 1 | | Updated Ordering Information. |

The following table captures the changes from the October 2004 issue.

| Page | Item | Change |
|---|---|---|
| 13 | Pin Description “CKi” on page 13 | • Clarified pin description for CKi. |
| 32 | 11.3, “Output Clock Frequencies“ | • Added new section to describe output clock frequencies. |

# 1.0 Pinout Diagrams

## 1.1 BGA Pinout

| | 1 | 2 | 3 | 4 | 5 | 6 | 7 | 8 | 9 | 10 | 11 | 12 | 13 | 14 | 15 | 16 | |
|---|---|---|---|---|---|---|---|---|---|---|---|---|---|---|---|---|---|
| A | $V_{SS}$ | STi29 | STi28 | STi27 | STi25 | STi26 | STi24 | NC | NC | STio22 | STio23 | STio21 | STio20 | NC | NC | $V_{SS}$ | A |
| B | STi31 | STi10 | STi5 | STi4 | CKo2 | STi0 | CKo0 | NC | $V_{DD_COREA}$ | FPi | CKi | IC_Open | IC_Open | IC_GND | ODE | STio19 | B |
| C | STi30 | STi9 | $V_{SS}$ | STi7 | STi6 | STi1 | CKo1 | NC | $V_{SS}$ | IC_Open | IC_Open | IC_Open | IC_GND | $V_{SS}$ | STio15 | STio18 | C |
| D | STi17 | STi11 | $V_{DD_IO}$ | STi3 | STi2 | NC | NC | NC | NC | $V_{SS}$ | FPo_OFF1 | IC_GND | STio13 | $V_{DD_IO}$ | STio14 | STio16 | D |
| E | STi16 | STi14 | STi8 | $V_{DD_IO}$ | $V_{SS}$ | $V_{DD_CORE}$ | NC | NC | NC | NC | $V_{DD_CORE}$ | $V_{SS}$ | $V_{DD_IO}$ | STio12 | FPo2 | STio17 | E |
| F | STi19 | STi15 | STi12 | STi13 | $V_{DD_IO}$ | $V_{DD_CORE}$ | $V_{DD_CORE}$ | $V_{SS}$ | $V_{SS}$ | $V_{DD_CORE}$ | $V_{DD_CORE}$ | $V_{DD_IO}$ | IC | FPo3 | FPo_OFF2 | STOHZ15 | F |
| G | STi18 | $\overline{RESET}$ | IC_GND | IC_Open | TDo | $V_{DD_IO}$ | $V_{SS}$ | $V_{SS}$ | $V_{SS}$ | $V_{SS}$ | $V_{DD_IO}$ | A12 | A13 | FPo1 | FPo0 | STOHZ14 | G |
| H | STi21 | $V_{SS}$ | $V_{SS}$ | $V_{DD_COREA}$ | NC | $V_{SS}$ | $V_{SS}$ | $V_{SS}$ | $V_{SS}$ | $V_{SS}$ | A7 | A9 | A10 | FPo_OFF0 | A11 | STOHZ12 | H |
| J | STi20 | $V_{DD_IOA}$ | $V_{DD_IOA}$ | $V_{SS}$ | $V_{SS}$ | CKo3 | $V_{SS}$ | $V_{SS}$ | $V_{SS}$ | $V_{SS}$ | A3 | A4 | A5 | A8 | A6 | STOHZ13 | J |
| K | STi22 | $V_{SS}$ | TMS | $V_{SS}$ | $V_{DD_COREA}$ | $V_{DD_IO}$ | $V_{SS}$ | $V_{SS}$ | $V_{SS}$ | $V_{SS}$ | $V_{DD_IO}$ | IC_Open | A0 | A2 | A1 | STOHZ11 | K |
| L | STi23 | $V_{DD_COREA}$ | $\overline{TRST}$ | TCK | $V_{DD_IO}$ | $V_{DD_CORE}$ | $V_{DD_CORE}$ | $V_{SS}$ | $V_{SS}$ | $V_{DD_CORE}$ | $V_{DD_CORE}$ | $V_{DD_IO}$ | STio10 | STio11 | STio9 | STOHZ10 | L |
| M | STio25 | NC | TDi | D0 | $V_{SS}$ | $V_{DD_CORE}$ | $V_{DD_CORE}$ | D6 | D10 | $V_{DD_CORE}$ | $V_{DD_CORE}$ | $V_{SS}$ | MOT_INTEL | MODE_4M0 | STio8 | STOHZ9 | M |
| N | STio24 | NC | $V_{DD_IO}$ | STio0 | STOHZ3 | D1 | D5 | D7 | D11 | D13 | R/$\overline{W}$_$\overline{WR}$ | $\overline{DTA}$_RDY | STio4 | $V_{DD_IO}$ | STOHZ5 | STOHZ8 | N |
| P | STio26 | NC | $V_{SS}$ | STio1 | STio3 | STOHZ1 | D3 | D8 | D14 | NC | STio5 | STOHZ4 | STOHZ6 | $V_{SS}$ | STOHZ7 | NC | P |
| R | STio27 | NC | STOHZ0 | STio2 | STOHZ2 | D2 | D4 | D9 | D12 | D15 | $\overline{CS}$ | $\overline{DS}$_$\overline{RD}$ | MODE_4M1 | STio6 | STio7 | NC | R |
| T | $V_{SS}$ | STio28 | STio29 | STio31 | STio30 | NC | NC | NC | NC | NC | NC | NC | NC | NC | NC | $V_{SS}$ | T |
| | 1 | 2 | 3 | 4 | 5 | 6 | 7 | 8 | 9 | 10 | 11 | 12 | 13 | 14 | 15 | 16 | |

**Note:** A1 corner identified by metallized marking.
**Note:** Pinout is shown as viewed through top of package.

**Figure 2 - ZL50020 256-Ball 17 mm x 17 mm PBGA (as viewed through top of package)**

## 1.2 QFP Pinout

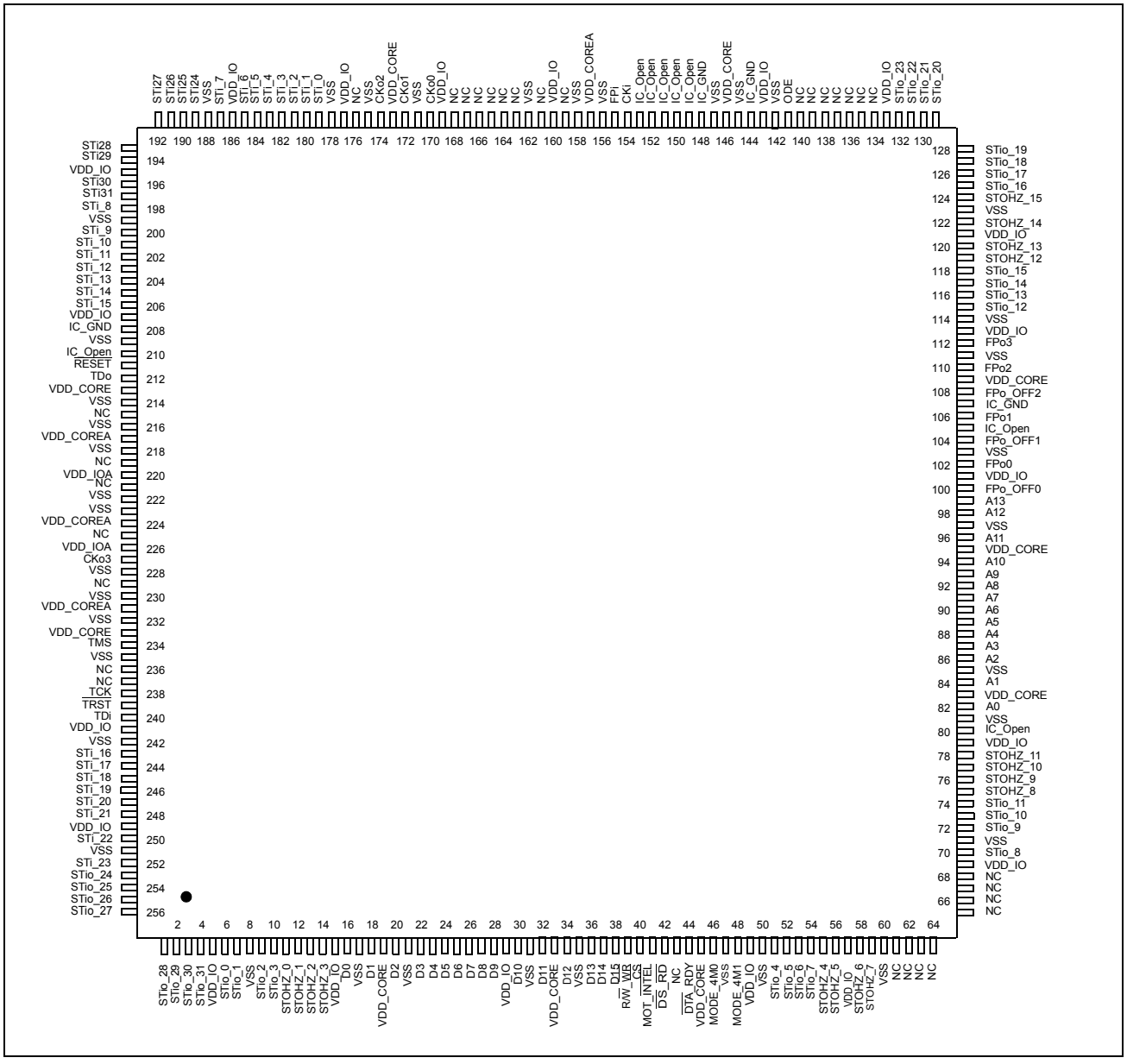


**Figure 3 - ZL50020 256-Lead 28 mm x 28 mm LQFP (top view)**

## 2.0 Pin Description

| PBGA Pin Number | LQFP Pin Number | Pin Name | Description |
|---|---|---|---|
| E6, E11, F6, F7, F10, F11, L6, L7, L10, L11, M6, M7, M10, M11 | 19, 33, 45, 83, 95, 109, 146, 173, 213, 233 | $V_{DD_CORE}$ | **Power Supply for the core logic:** +1.8 V |
| H4, K5, B9, L2 | 217, 231, 157, 224 | $V_{DD_COREA}$ | **Power Supply for analog circuitry:** +1.8 V |
| D3, D14, E4, E13, F5, F12, G6, G11, K6, K11, L5, L12, N3, N14 | 5, 15, 29, 49, 57, 69, 79, 101, 113, 121, 133, 143, 160, 169, 177, 186, 195, 207, 241, 249 | $V_{DD_IO}$ | **Power Supply for I/O:** +3.3 V |
| J2, J3 | 220, 226 | $V_{DD_IOA}$ | **Power Supply for the CKo5 and CKo3 outputs:** +3.3 V |
| A1, A16, C3, C9, C14, D10, E5, E12, F8, F9, G7, G8, G9, G10, H2, H3, H6, H7, H8, H9, H10, J4, J5, J7, J8, J9, J10, K2, K4, K7, K8, K9, K10, L8, L9, M5, M12, P3, P14, T1, T16 | 8, 17, 21, 31, 35, 47, 50, 60, 71, 81, 85, 97, 103, 111, 114, 123, 142, 145, 147, 156, 158, 162, 171, 175, 178, 188, 199, 209, 214, 216, 218, 222, 223, 228, 230, 232, 235, 242, 251 | $V_{SS}$ | **Ground** |

| PBGA Pin Number | LQFP Pin Number | Pin Name | Description |
|---|---|---|---|
| K3 | 234 | TMS | **Test Mode Select (5 V-Tolerant Input with Internal Pull-up)** JTAG signal that controls the state transitions of the TAP controller. This pin is pulled high by an internal pull-up resistor when it is not driven. |
| L4 | 238 | TCK | **Test Clock (5 V-Tolerant Schmitt-Triggered Input with Internal Pull-up)** Provides the clock to the JTAG test logic. |
| L3 | 239 | $\overline{\text{TRST}}$ | **Test Reset (5 V-Tolerant Input with Internal Pull-up)** Asynchronously initializes the JTAG TAP controller by putting it in the Test-Logic-Reset state. This pin should be pulsed low during power-up to ensure that the device is in the normal functional mode. When JTAG is not being used, this pin should be pulled low during normal operation. |
| M3 | 240 | TDi | **Test Serial Data In (5 V-Tolerant Input with Internal Pull-up)** JTAG serial test instructions and data are shifted in on this pin. This pin is pulled high by an internal pull-up resistor when it is not driven. |
| G5 | 212 | TDo | **Test Serial Data Out (5 V-Tolerant Three-state Output)** JTAG serial data is output on this pin on the falling edge of TCK. This pin is held in high impedance state when JTAG is not enabled. |
| B12, B13, C10, C11, F13, G4, K12, C12, | 80, 105, 150, 151, 152, 153, 210, 149 | IC_Open | **Internal Test Mode (5 V-Tolerant Input with Internal Pull-down)** These pins may be left unconnected. |
| G3, D12, B14, C13 | 144, 107, 148, 208 | IC_GND | **Internal Test Mode Enable (5 V-Tolerant Input)** These pins **MUST** be low. |

| PBGA Pin Number | LQFP Pin Number | Pin Name | Description |
|---|---|---|---|
| A8, A9, A14, A15, E10, M2, N2, P2, P16, R2, R16, T6, T7, T8, T9, T10, T11, T12, T13, T14, T15, D9, E8, C8, E7, D6, H5, P10, E9, D8, B8, D7 | 61, 62, 63, 64, 65, 66, 67, 68, 134, 135, 136, 137, 138, 139, 140, 152, 215, 219, 225, 229, 236, 237159, 163, 165, 167, 176, 221, 43, 161, 164, 166, 168 | NC | **No Connect**<br>These pins **MUST** be left unconnected. |
| M14, R13 | 46, 48 | MODE_4M0, MODE_4M1 | **4M Input Clock Mode 0 to 1 (5 V-Tolerant Input with internal pull-down)** These two pins should be tied together and are typically used to select CKi = 4.096 MHz operation. See Table 7, “ZL50020 Operating Modes” on page 32 for a detailed explanation. See Table 13, “Control Register (CR) Bits” on page 39 for CKi and FPi selection using the CKIN1 - 0 bits. |
| G15, G14, E15, F14 | 102, 106, 110, 112 | FPo0 - 3 | **ST-BUS/GCI-Bus Frame Pulse Outputs 0 to 3 (5 V-Tolerant Three-state Outputs)**<br>FPo0: 8 kHz frame pulse corresponding to the 4.096 MHz output clock of CKo0.<br>FPo1: 8 kHz frame pulse corresponding to the 8.192 MHz output clock of CKo1.<br>FPo2: 8 kHz frame pulse corresponding to 16.384 MHz output clock of CKo2.<br>FPo3: Programmable 8 kHz frame pulse corresponding to 4.096 MHz, 8.192 MHz, 16.384 MHz, or 32.768 MHz output clock of CKo3. |
| H14, D11, F15 | 100, 104, 108 | FPo_OFF0 - 2 | **Generated Offset Frame Pulse Outputs 0 to 2 (5 V-Tolerant Three-state Outputs)**<br>Individually programmable 8 kHz frame pulses, offset from the output frame boundary by a programmable number of channels. |
| B7, C7, B5, J6 | 170, 172, 174, 227 | CKo0 - 3 | **ST-BUS/GCI-Bus Clock Outputs 0 to 3 (5 V-Tolerant Three-state Outputs)**<br>CKo0: 4.096 MHz output clock.<br>CKo1: 8.192 MHz output clock.<br>CKo2: 16.384 MHz output clock.<br>CKo3: 4.096 MHz, 8.192 MHz or 16.384 MHz programmable output clock. 32.768 MHz if in multiplied clock mode. |

| PBGA Pin Number | LQFP Pin Number | Pin Name | Description |
|---|---|---|---|
| B10 | 155 | FPi | **ST-BUS/GCI-Bus Frame Pulse Input (5 V-Tolerant Schmitt-Triggered Input)**<br>This pin accepts the frame pulse which stays active for 61 ns, 122 ns or 244 ns at the frame boundary. The frame pulse frequency is 8 kHz. The frame pulse associated with the CKi must be applied to this pin. If the data rate is 16.384 Mbps, a 61 ns wide frame pulse must be used. By default, the device accepts a negative frame pulse in ST-BUS format, but it can accept a positive frame pulse instead if the FPINP bit is set high in the Control Register (CR). It can accept a GCI-formatted frame pulse by programming the FPINPOS bit in the Control Register (CR) to high. |
| B11 | 154 | CKi | **ST-BUS/GCI-Bus Clock Input (5 V-Tolerant Schmitt-Triggered Input)**<br>This pin accepts a 4.096 MHz, 8.192 MHz or 16.384 MHz clock.<br>In divided clock mode the clock frequency applied to this pin must be **twice the highest input or output** data rate. In multiplied clock mode the clock frequency applied to this pin must be **twice the highest input** data rate.<br>The exception is, when data is running at 16.384 Mbps, a 16.384 MHz clock must be used. By default, the clock falling edge defines the input frame boundary, but the device allows the clock rising edge to define the frame boundary by programming the CKINP bit in the Control Register (CR). |
| B6, C6, D5, D4, B4, B3, C5, C4, E3, C2, B2, D2, F3, F4, E2, F2, E1, D1, G1, F1, J1, H1, K1, L1, A7, A5, A6, A4, A3, A2, C1, B1 | 179, 180, 181, 182, 183, 184, 185, 187, 198, 200, 201, 202, 203, 204, 205, 206, 243, 244, 245, 246, 247, 248, 250, 252, 189, 190, 191, 192, 193, 194, 196, 197 | STi0 - 31 | **Serial Input Streams 0 to 31 (5 V-Tolerant Inputs with Internal Pull-downs)**<br>The data rate of each input stream can be selected independently using the Stream Input Control Registers (SICR[n]). In the 2.048 Mbps mode, these pins accept serial TDM data streams at 2.048 Mbps with 32 channels per frame. In the 4.096 Mbps mode, these pins accept serial TDM data streams at 4.096 Mbps with 64 channels per frame. In the 8.192 Mbps mode, these pins accept serial TDM data streams at 8.192 Mbps with 128 channels per frame. In the 16.384 Mbps mode, these pins accept TDM data streams at 16.384 Mbps with 256 channels per frame. |

| PBGA Pin Number | LQFP Pin Number | Pin Name | Description |
|---|---|---|---|
| N4, P4, R4, P5, N13, P11, R14, R15, M15, L15, L13, L14, E14, D13, D15, C15, D16, E16, C16, B16, A13, A12, A10, A11, N1, M1, P1, R1, T2, T3, T5, T4 | 6, 7, 9, 10, 51, 52, 53, 54, 70, 72, 73, 74, 115, 116, 117, 118, 125, 126, 127, 128, 129, 130, 131, 132, 253, 254, 255, 256, 1, 2, 3, 4 | STio0 - 31 | **Serial Output Streams 0 to 31 (5 V-Tolerant Slew-Rate-Limited Three-state I/Os with Enabled Internal Pull-downs)** The data rate of each output stream can be selected independently using the Stream Output Control Registers (SOCR[n]). In the 2.048 Mbps mode, these pins output serial TDM data streams at 2.048 Mbps with 32 channels per frame. In the 4.096 Mbps mode, these pins output serial TDM data streams at 4.096 Mbps with 64 channels per frame. In the 8.192 Mbps mode, these pins output serial TDM data streams at 8.192 Mbps with 128 channels per frame. In the 16.384 Mbps mode, these pins output serial TDM data streams at 16.384 Mbps with 256 channels per frame.These output streams can be used as bi-directionals by programming BDH (bit 7) and BDL (bit 6) of Internal Mode Selection (IMS) register. |
| R3, P6, R5, N5, P12, N15, P13, P15, N16, M16, L16, K16, H16, J16, G16, F16 | 11, 12, 13, 14, 55, 56, 58, 59, 75, 76, 77, 78, 119, 120, 122, 124 | STOHZ0 - 15 | **Serial Output Streams High Impedance Control 0 to 15 (5 V-Tolerant Slew-Rate-Limited Three-state Outputs)** These pins are used to enable (or disable) external three-state buffers. When an output channel is in the high impedance state, the STOHZ drives high for the duration of the corresponding output channel. When the STio channel is active, the STOHZ drives low for the duration of the corresponding output channel. STOHZ outputs are available for STio0 - 15 only. |
| B15 | 141 | ODE | **Output Drive Enable (5 V-Tolerant Input with Internal Pull-up)** This is the output enable control for STio0 - 31 and the output-driven-high control for STOHZ0 - 15. When it is high, STio0 - 31 and STOHZ0 - 15 are enabled. When it is low, STio0 - 31 are tristated and STOHZ0 - 15 are driven high. |
| M4, N6, R6, P7, R7, N7, M8, N8, P8, R8, M9, N9, R9, N10, P9, R10 | 16, 18, 20, 22, 23, 24, 25, 26, 27, 28, 30, 32, 34, 36, 37, 38 | D0 - 15 | **Data Bus 0 to 15 (5 V-Tolerant Slew-Rate-Limited Three-state I/Os)** These pins form the 16-bit data bus of the microprocessor port. |

| PBGA Pin Number | LQFP Pin Number | Pin Name | Description |
|---|---|---|---|
| N12 | 44 | $\overline{\text{DTA}}$_RDY | **Data Transfer Acknowledgment_Ready (5 V-Tolerant Three-state Output)**<br>This active low output indicates that a data bus transfer is complete for the Motorola interface. For the Intel interface, it indicates a transfer is completed when this pin goes from low to high. An external pull-up resistor **MUST** hold this pin at HIGH level for the Motorola mode. An external pull-down resistor **MUST** hold this pin at LOW level for the Intel mode. |
| R11 | 40 | $\overline{\text{CS}}$ | **Chip Select (5 V-Tolerant Input)**<br>Active low input used by the Motorola or Intel microprocessor to enable the microprocessor port access. |
| N11 | 39 | R/$\overline{\text{W}}$_$\overline{\text{WR}}$ | **Read/Write_Write (5 V-Tolerant Input)**<br>This input controls the direction of the data bus lines (D0 - 15) during a microprocessor access. For the Motorola interface, this pin is set high and low for the read and write access respectively. For the Intel interface, a write access is indicated when this pin goes low. |
| R12 | 42 | $\overline{\text{DS}}$_$\overline{\text{RD}}$ | **Data Strobe_Read (5 V-Tolerant Input)**<br>This active low input works in conjunction with $\overline{\text{CS}}$ to enable the microprocessor port read and write operations for the Motorola interface. A read access is indicated when it goes low for the Intel interface. |
| K13, K15, K14, J11, J12, J13, J15, H11, J14, H12, H13, H15, G12, G13 | 82, 84, 86, 87, 88, 89, 90, 91, 92, 93, 94, 96, 98, 99 | A0 - 13 | **Address 0 to 13 (5 V-Tolerant Inputs)**<br>These pins form the 14-bit address bus to the internal memories and registers. |
| M13 | 41 | MOT_$\overline{\text{INTEL}}$ | **Motorola_Intel (5 V-Tolerant Input with Internal Pull-up)**<br>This pin selects the Motorola or Intel microprocessor interface to be connected to the device. When this pin is unconnected or connected to high, Motorola interface is assumed. When this pin is connected to ground, Intel interface should be used. |
| G2 | 211 | $\overline{\text{RESET}}$ | **Device Reset (5 V-Tolerant Input with Internal Pull-up)**<br>This input (active LOW) puts the device in its reset state that disables the STio0 - 31 drivers and drives the STOHZ0 - 15 outputs to high. It also preloads registers with default values and clears all internal counters. To ensure proper reset action, the reset pin must be low for longer than 1 μs. Upon releasing the reset signal to the device, the first microprocessor access cannot take place for at least 600 μs due to the time required to stabilize the device from the power-down state. Refer to Section Section 13.2 on page 33 for details. |

## 3.0 Device Overview

The device has thirty-two ST-BUS/GCI-Bus inputs (STi0 - 31) and thirty-two ST-BUS/GCI-Bus outputs (STio0 - 31). STio0 - 31 can also be configured as bi-directional pins, in which case STi0 - 31 will be ignored. It is a non-blocking digital switch with 2048 64 kbps channels and is capable of performing rate conversion between ST-BUS/GCI-Bus inputs and ST-BUS/GCI-Bus outputs. The ST-BUS/GCI-Bus inputs accept serial input data streams with data rates of 2.048 Mbps, 4.096 Mbps, 8.192 Mbps and 16.384 Mbps on a per-stream basis. The ST-BUS/GCI-Bus outputs deliver serial data streams with data rates of 2.048 Mbps, 4.096 Mbps and, 8.192 Mbps and 16.384 Mbps on a per-stream basis. The device also provides sixteen high impedance control outputs (STOHZ0 - 15) to support the use of external ST-BUS/GCI-Bus tristate drivers for the first sixteen ST-BUS/GCI-Bus outputs (STio0 -15).

By using Zarlink's message mode capability, microprocessor data stored in the connection memory can be broadcast to the output streams on a per-channel basis. This feature is useful for transferring control and status information for external circuits or other ST-BUS/GCI-Bus devices.

The device uses the ST-BUS/GCI-Bus input frame pulse (FPi) and the ST-BUS/GCI-Bus input clock (CKi) to define the input frame boundary and timing for sampling the ST-BUS/GCI-Bus input streams with various data rates. The output data streams will be driven by and have their timing defined by FPi and CKi in Divided Clock mode (CLKM bit 11 Table 13, Control Register (CR) Bits. In Multiplied Clock mode, the output data streams will be driven by an internally generated clock, which is multiplied from CKi internally. In Multiplied Clock mode, the output data streams will be driven by an internally generated clock, which is multiplied from CKi internally. Refer to Application Note ZLAN-120 for further explanation of the different modes of operation.

There are two clock modes for this device:

The first is the Divided Clock mode. In this mode, output streams are clocked by input CKi. Therefore the output streams have exactly the same jitter as the input streams. The output data rate can be the same as or lower than the input data rate, but the output data rate cannot be higher than what CKi can drive. For example, if CKi is 4.096 MHz, the output data rate cannot be higher than 2.048 Mbps.The second clock mode is called Multiplied Clock mode. In this mode, CKi is used to generate a 16.384 MHz clock internally, and output streams are driven by this internal clock. In Multiplied Clock mode, the data rate of output streams can be any rate, but output jitter may not be exactly the same as input jitter.

A Motorola or Intel compatible non-multiplexed microprocessor port allows users to program the device to operate in various modes under different switching configurations. Users can use the microprocessor port to perform internal register and memory read and write operations. The microprocessor port has a 16-bit data bus, a 14-bit address bus and six control signals (MOT_INTEL, CS, DS_RD, R/W_WR and DTA_RDY).

The device supports the mandatory requirements of the IEEE-1149.1 (JTAG) standard via the test port.

## 4.0 Data Rates and Timing

The ZL50020 has 32 serial data inputs and 32 serial data outputs. Each stream can be individually programmed to operate at 2.048 Mbps, 4.096 Mbps, 8.192 Mbps or 16.384 Mbps. Depending on the data rate there will be 32 channels, 64 channels, 128 channels or 256 channels, respectively, during a 125 μs frame.

The output streams can be programmed to operate as bi-directional streams. The output streams are divided into two groups to be programmed into bi-directional mode. By setting BDL (bit 6) in the Internal Mode Selection (IMS) register, input streams 0 - 15 (STi0 - 15) are internally tied low, and output streams 0 - 15 (STio0 - 15) are set to operate in a bi-directional mode. Similarly, when BDH (bit 7) in the Internal Mode Selection (IMS) register is set, input streams 16 - 31 (STi16 - 31) are internally tied low, and output streams 16 - 31 (STio16 - 31) are set to operate in bi-directional mode. The groups do not have to be set into the same mode. Therefore it is possible to have half of the streams operating in bi-directional mode while the other half is operating in normal input/output mode.

The input data rate is set on a per-stream basis by programming STIN[n]DR3 - 0 (bits 3 - 0) in the Stream Input Control Register 0 - 31 (SICR0 - 31). The output data rate is set on a per-stream basis by programming STO[n]DR3 - 0 (bits 3 - 0) in the Stream Output Control Register 0 - 31 (SOCR0 - 31). The output data rates do not have to match or follow the input data rates. he maximum number of channels switched is limited to 2048 channels. If all 32

input streams were operating at 16.384 Mbps (256 channels per stream), this would result in 8192 channels. Memory limitations prevent the device from operating at this capacity. A maximum capacity of 2048 channels will occur if eight of the streams are operating at 16.384 Mbps, half of the streams are operating at 8.192 Mbps or all streams operating at 4.096 Mbps. With all streams operating at 2.048 Mbps, the capacity will be reduced to 1024 channels. However, as each stream can be programmed to a different data rate, any combination of data rates can be achieved, as long as the total channel count does not exceed 2048 channels. It should be noted that only full stream can be programmed for use. The device does not allow fractional streams. External High Impedance Control, STOHZ0 - 15.

There are 16 external high impedance control signals, STOHZ0 - 15, that are used to control the external drivers for per-channel high impedance operations. Only the first sixteen ST-BUS/GCI-Bus (STio0 - 15) outputs are provided with corresponding STOHZ signals. The STOHZ outputs deliver the appropriate number of control timeslot channels based on the output stream data rate. Each control timeslot lasts for one channel time. When the ODE pin is high and the OSB (bit 2) of the Control Register (CR) is also high, STOHZ0 - 15 are enabled. When the ODE pin, OSB (bit 2) of the Control Register (CR) or the $\overline{\text{RESET}}$ pin is low, STOHZ0 - 15 are driven high, together with all the ST-BUS/GCI-Bus outputs being tristated. Under normal operation, the corresponding STOHZ outputs of any unused ST-BUS/GCI-Bus channel (high impedance) are driven high. Refer to Figure 16 on page 28 for a diagrammatical explanation.

## 4.1 Input Clock (CKi) and Input Frame Pulse (FPi) Timing

The frequency of the input clock (CKi) for the ZL50020 depends on the operation mode selected. In divided clock mode, CKi must be at least twice the highest input or output data rate. For example, if the highest input data rate is 4.096 Mbps and the highest output data rate is 8.192 Mbps, the input clock, CKi, must be 16.384 MHz, which is twice the highest overall data rate. The only exception to this is for 16.384 Mbps input or output data. In this case, the input clock, CKi, is equal to the data rate. The input frame pulse, FPi, must always follow CKi. In multiplied clock mode the frequency of CKi must be at least twice the highest input data rate regardless of the output data rate. An APLL is used to multiple CKi to generate an internal clock that is used to output clocks and STio streams. Following the example above, if the highest input data rate is 4.096 Mbps, the input clock, CKi, must be 8.192 MHz, regardless of the output data rate. The only exception to this is for 16.384 Mbps input or output data. In this case, the input clock, CKi, is equal to the data rate. The input frame pulse, FPi, must always follow CKi.

In either mode the user has to program the CKIN1 - 0 (bits 6 - 5) in the Control Register (CR) to indicate the width of the input frame pulse and the frequency of the input clock supplied to the device.

| Highest ***Input or Output*** Data Rate | CKIN 1-0 Bits | Input Clock Rate (CKi) | Input Frame Pulse (FPi) |
|---|---|---|---|
| 8.192 Mbps or 16.384 Mbps | 00 | 16.384 MHz | 8 kHz (61 ns wide pulse) |
| 4.096 Mbps | 01 | 8.192 MHz | 8 kHz (122 ns wide pulse) |
| 2.048 Mbps | 10 | 4.096 MHz | 8 kHz (244 ns wide pulse) |

**Table 1 - CKi and FPi Configurations for Divided Clock Modes**

| Highest ***Input*** Data Rate | CKIN 1-0 Bits | Input Clock Rate (CKi) | Input Frame Pulse (FPi) |
|---|---|---|---|
| 8.192 Mbps or 16.384 Mbps | 00 | 16.384 MHz | 8 kHz (61 ns wide pulse) |
| 4.096 Mbps | 01 | 8.192 MHz | 8 kHz (122 ns wide pulse) |
| 2.048 Mbps | 10 | 4.096 MHz | 8 kHz (244 ns wide pulse) |

**Table 2 - CKi and FPi Configurations for Multiplied Clock Mode**

The ZL50020 accepts positive and negative ST-BUS/GCI-Bus input clock and input frame pulse formats via the programming of CKINP (bit 8) and FPINP (bit 7) in the Control Register (CR). By default, the device accepts the negative input clock format and ST-BUS format frame pulses. However, the switch can also accept a positive-going clock format by programming CKINP (bit 8) in the Control Register (CR). A GCI-Bus format frame pulse can be used by programming FPINPOS (bit 9) and FPINP (bit 7) in the Control Register (CR).

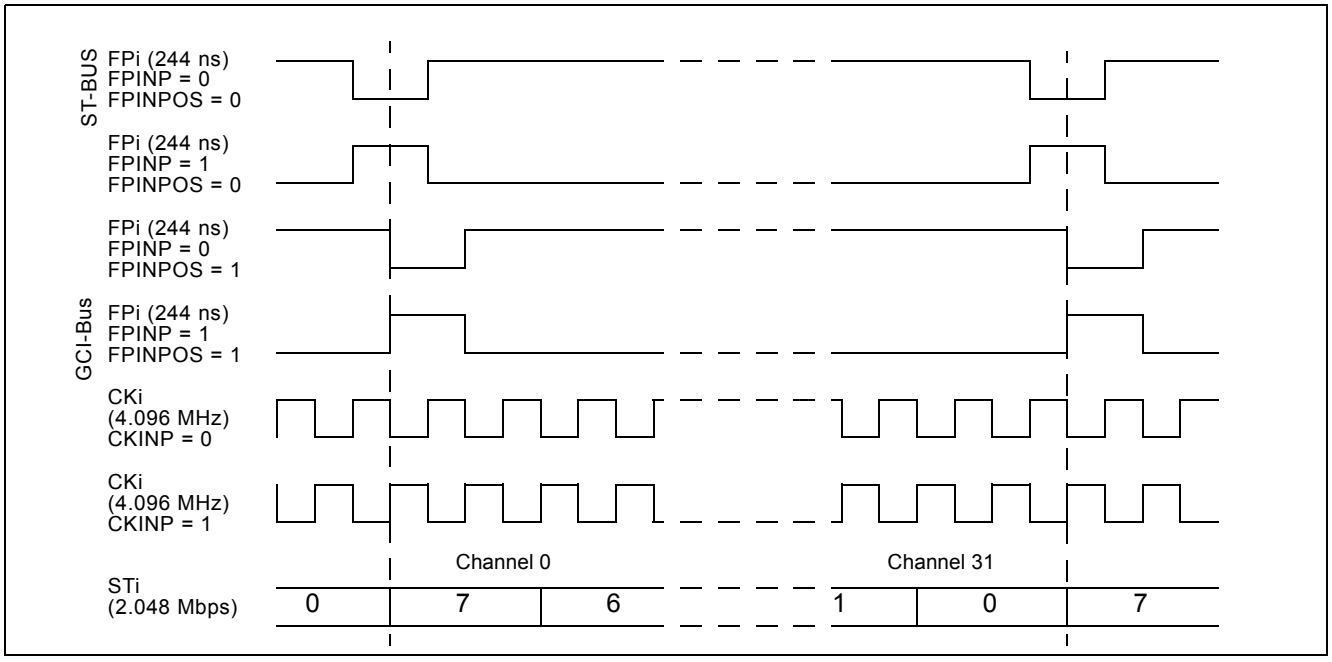


**Figure 4 - Input Timing when CKIN1 - 0 bits = “10” in the CR**

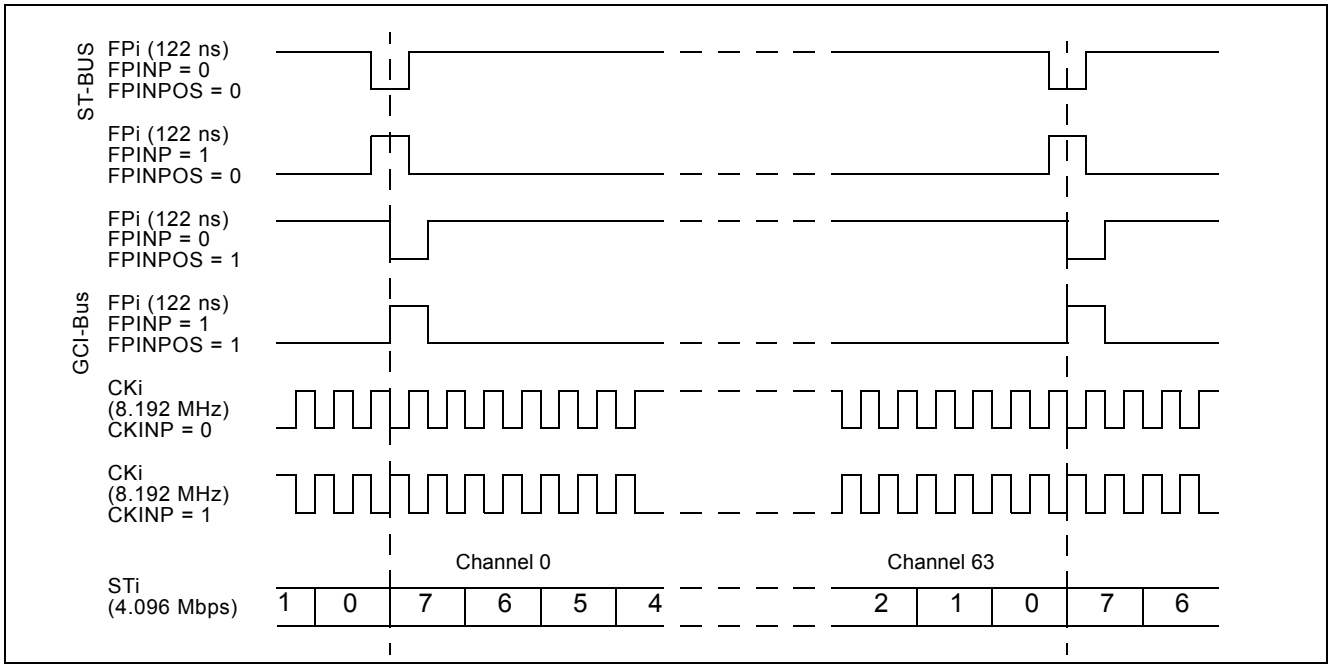


**Figure 5 - Input Timing when CKIN1 - 0 bits = “01” in the CR**

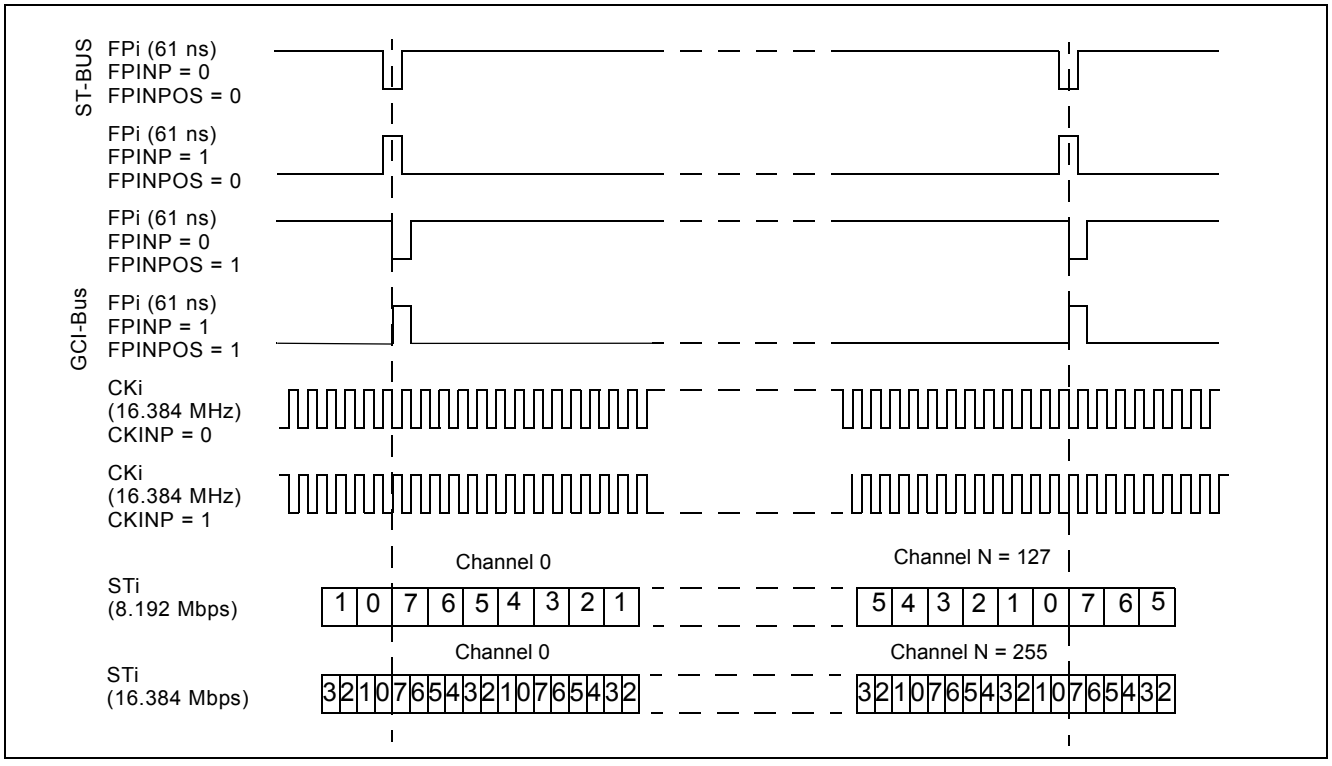


**Figure 6 - Input Timing when CKIN1 - 0 = “00” in the CR**

## 5.0 ST-BUS and GCI-Bus Timing

The ZL50020 is capable of operating using either the ST-BUS or GCI-Bus standards. The output timing that the device generates is defined by the bus standard. In the ST-BUS standard, the output frame boundary is defined by the falling edge of CKo while FPo is low. In the GCI-Bus standard, the frame boundary is defined by the rising edge of CKo while FPo goes high. The data rates define the number of channels that are available in a 125 µs frame pulse period.

By default, the ZL50020 is configured for ST-BUS input and output timing. To set the input timing to conform to the GCI-Bus standard, FPINPOS (bit 9) and FPINP (bit 7) in the Control Register (CR) must be set. To set output timing to conform to the GCI-Bus standard, FPO[n]P and FPO[n]POS must be set in the Output Clock and Frame Pulse Selection Register (OCFSR). The CKO[n]P bits in the Output Clock and Frame Pulse Selection Register control the polarity (positive-going or negative-going) of the output clocks.

## 6.0 Output Timing Generation

The ZL50020 generates frame pulse and clock timing. There are four output frame pulse pins (FPo0 - 3) and four output clock pins (CKo0 - 3). All output frame pulses are 8 kHz output signals. By default, the output frame boundary is defined by the falling edge of the CKo0, while FPo0 is low. At the output frame boundary, the CKo1, CKo2 and CKo3 output clocks will by default have a falling edge, while FPo1, FPo2 and FPo3 will be low. The duration of the frame pulse low cycle and the frequency of the corresponding output clock are shown in Table 3 on page 19. Every frame pulse and clock output can be tristated by programming the enable bits in the Internal Mode Selection (IMS) register.

| Pin Name | Output Timing Rate | Output Timing Unit |
|---|---|---|

**Table 3 - Output Timing Generation**

| | | |
|---|---|---|
| FPo0 pulse width | 244 | ns |
| CKo0 | 4.096 | MHz |
| FPo1 pulse width | 122 | ns |
| CKo1 | 8.192 | MHz |
| FPo2 pulse width | 61 | ns |
| CKo2 | 16.384 | MHz |
| FPo3 pulse width | 244, 122, 61 or 30 | ns |
| CKo3 | 4.096, 8.192, 16.384 or 32.768 | MHz |

**Table 3 - Output Timing Generation**

The output timing is dependent on the operation mode that is selected. When the device is in Divided Clock mode, the frequencies on CKo0 - 3 cannot be greater than the input clock, CKi. For example, if the input clock is 8.192 MHz, the CKo2 pin will not produce a valid output clock and the CKo3 pin can only be programmed to output a 4.096 MHz or 8.192 MHz clock signal.

The device also delivers positive or negative output frame pulse and ST-BUS/GCI-Bus output clock formats via the programming of various bits in the Output Clock and Frame Pulse Selection Register (OCFSR). By default, the device delivers the negative output clock format. The ZL50020 can also deliver GCI-Bus format output frame pulses by programming bits of the Output Clock and Frame Pulse Selection Register (OCFSR). As there is a separate bit setting for each frame pulse output, some of the outputs can be set to operate in ST-BUS mode and others in GCI-Bus mode.

The following figures describe the usage of the FPO0P, FPO1P, FPO2P, FPO3P, CKO0P, CKO1P, CKO2P and CKO3P bits to generate the FPo0 - 3 and CKo0 - 3 timing.

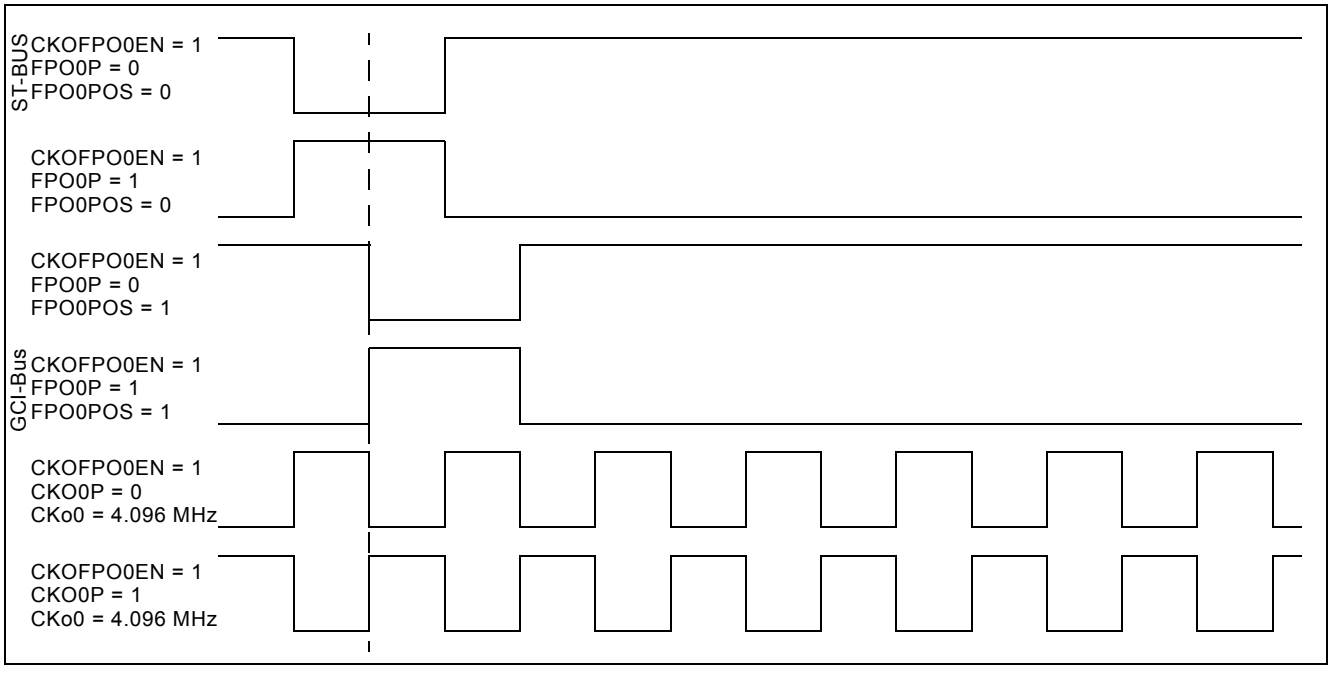


**Figure 7 - Output Timing for CKo0 and FPo0**

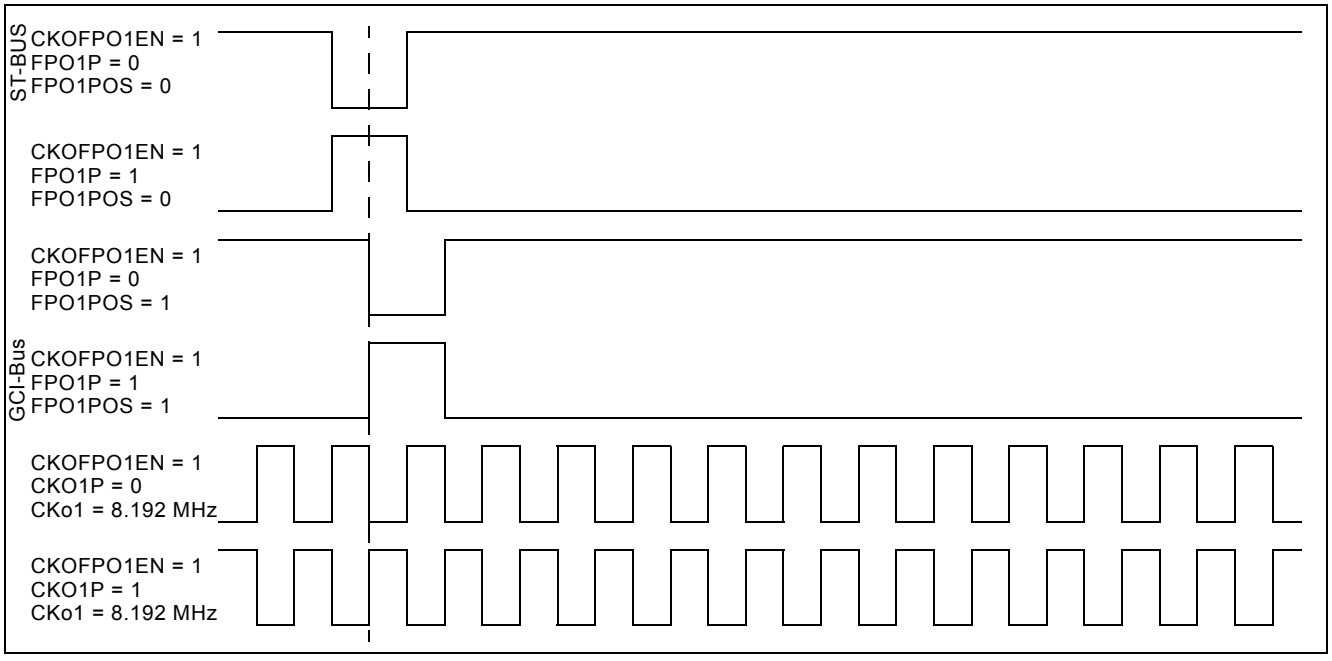


**Figure 8 - Output Timing for CKo1 and FPo1**

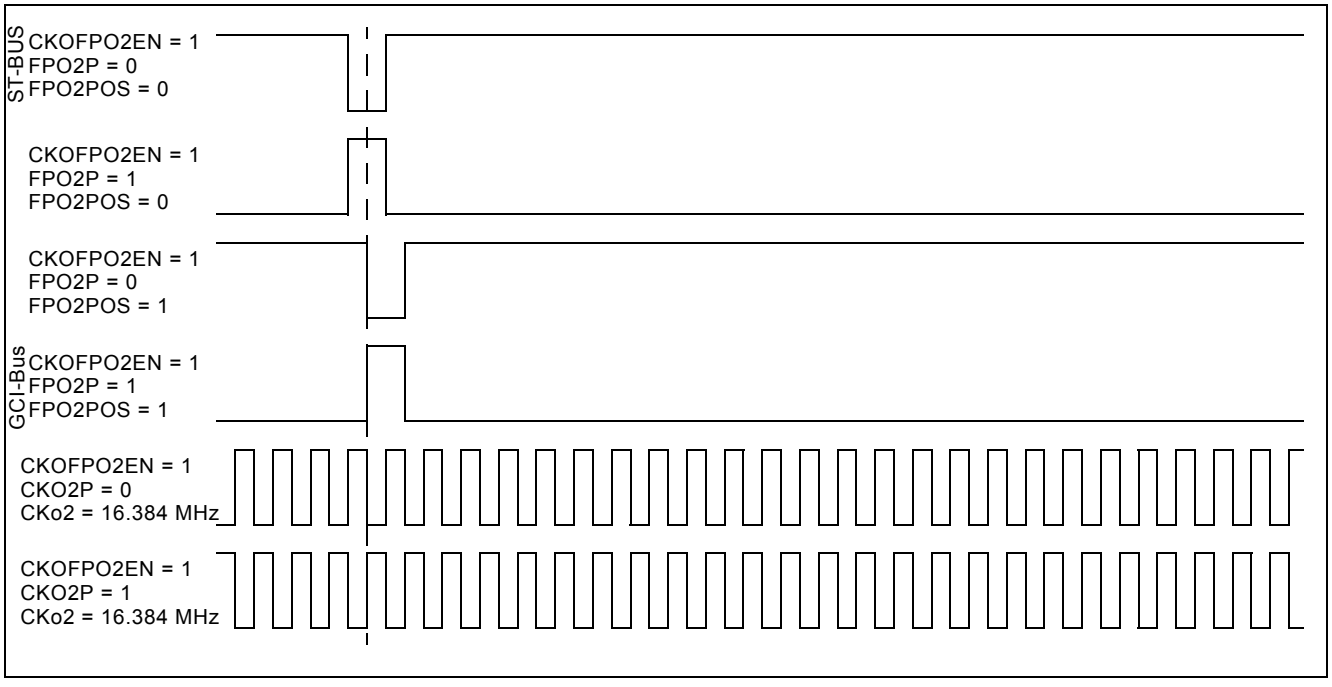


**Figure 9 - Output Timing for CKo2 and FPo2**

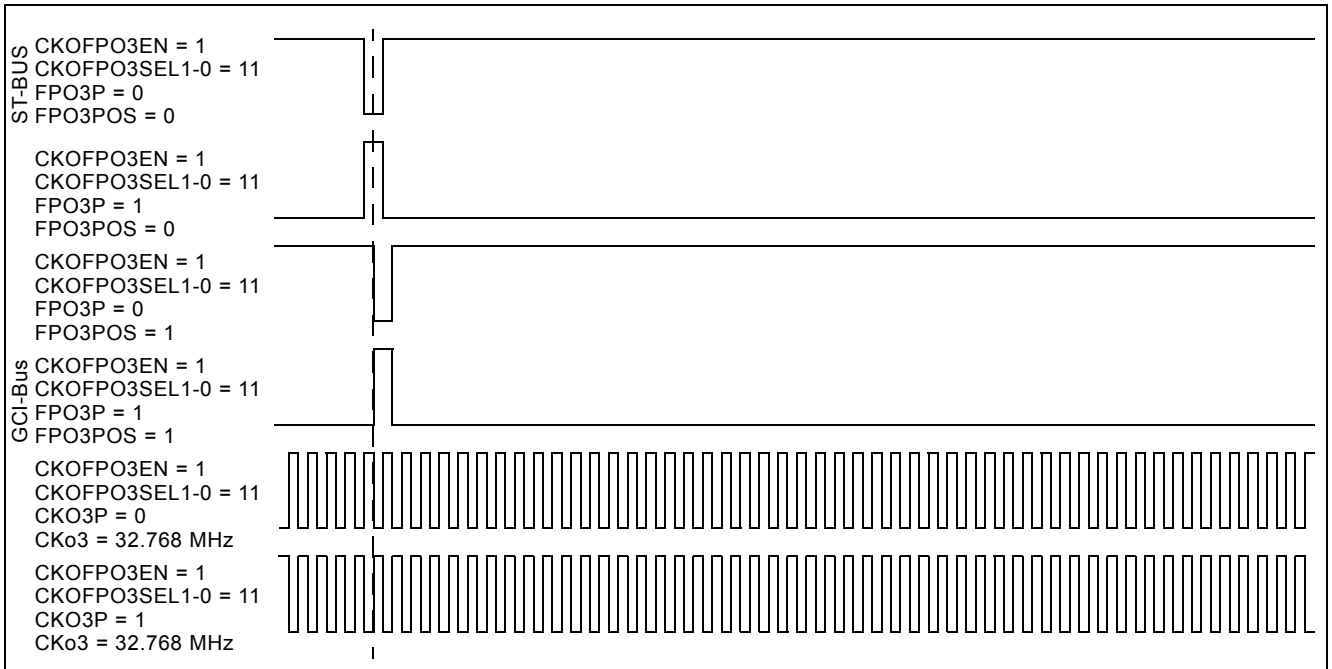


NOTE:
When CKOFPO3SEL1-0 = “00,” the output for FPo3 and CKo3 follow the same as Figure 7: Output Timing for CKo0 and FPo0
When CKOFPO3SEL1-0 = “01,” the output for FPo3 and CKo3 follow the same as Figure 8: Output Timing for CKo1 and FPo1
When CKOFPO3SEL1-0 = “10,” the output for FPo3 and CKo3 follow the same as Figure 9: Output Timing for CKo2 and FPo2

**Figure 10 - Output Timing for CKo3 and FPo3 with CKoFPo3SEL1-0=”11”**

## 7.0 Data Input Delay and Data Output Advancement

Various registers are provided to adjust the input delay and output advancement for each input and output data stream. The input bit delay and output bit advancement can vary from 0 to 7 bits for each individual stream.

If input delay of less than a bit is desired, different sampling points can be used to handle the adjustments. The sampling point can vary from 1/4 to 4/4 with a 1/4-bit increment for all input streams, unless the stream is operating at 16.384 Mbps, in which case the fractional bit delay has a 1/2-bit increment. By default, the sampling point is set to the 3/4-bit location for non-16.384 Mbps data rates and the 1/2-bit location for the 16.384 Mbps data rate.

The fractional output bit advancement can vary from 0 to 3/4 bits, again with a 1/4-bit increment unless the output stream is operating at 16.384 Mbps, in which case the output bit advancement has a 1/2-bit increment from 0 to 1/2 bit. By default, there is 0 output bit advancement.

Although input delay or output advancement features are available on streams which are operating in bi-directional mode it is not recommended, as it can easily cause bus contention. If users require this function, special attention must be given to the timing to ensure contention is minimized.

## 7.1 Input Bit Delay Programming

The input bit delay programming feature provides users with the flexibility of handling different wire delays when designing with source streams for different devices.

By default, all input streams have zero bit delay, such that bit 7 is the first bit that appears after the input frame boundary (assuming ST-BUS formatting). The input delay is enabled by STIN[n]BD2-0 (bits 8 - 6) in the Stream Input Control Register 0 - 31 (SICR0 - 31) as described in Table 24 on page 50. The input bit delay can range from 0 to 7 bits.

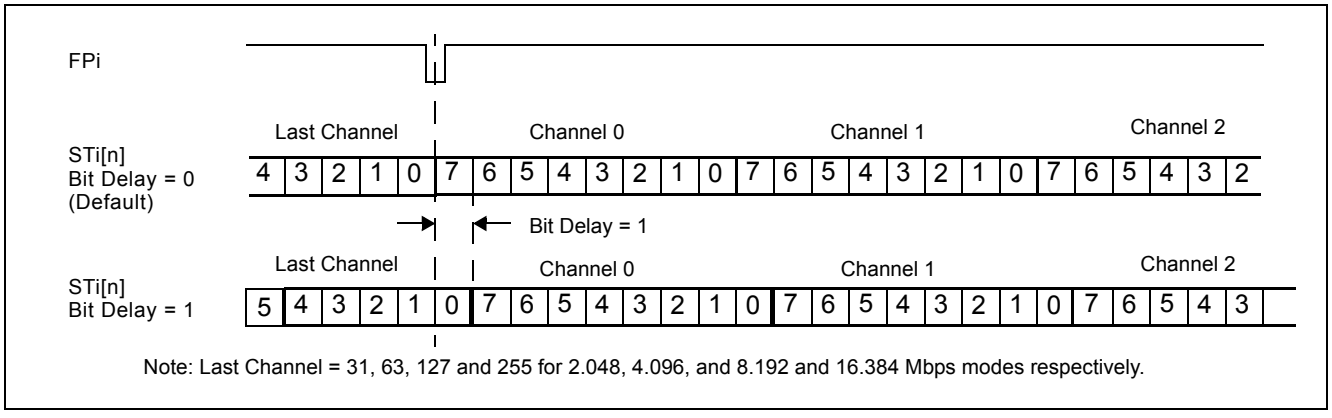


**Figure 11 - Input Bit Delay Timing Diagram (ST-BUS)**

## 7.2 Input Bit Sampling Point Programming

In addition to the input bit delay feature, theZL50020 allows users to change the sampling point of the input bit by programming STIN[n]SMP 1-0 (bits 5 - 4) in the Stream Input Control Register 0 - 31 (SICR0 - 31). For input streams operating at any rate except 16.384 Mbps, the default sampling point is at 3/4 bit and users can change the sampling point to 1/4, 1/2, 3/4 or 4/4 bit position. When the stream is operating at 16.384 Mbps, the default sampling point is 1/2 bit and can be adjusted to a 4/4 bit position.

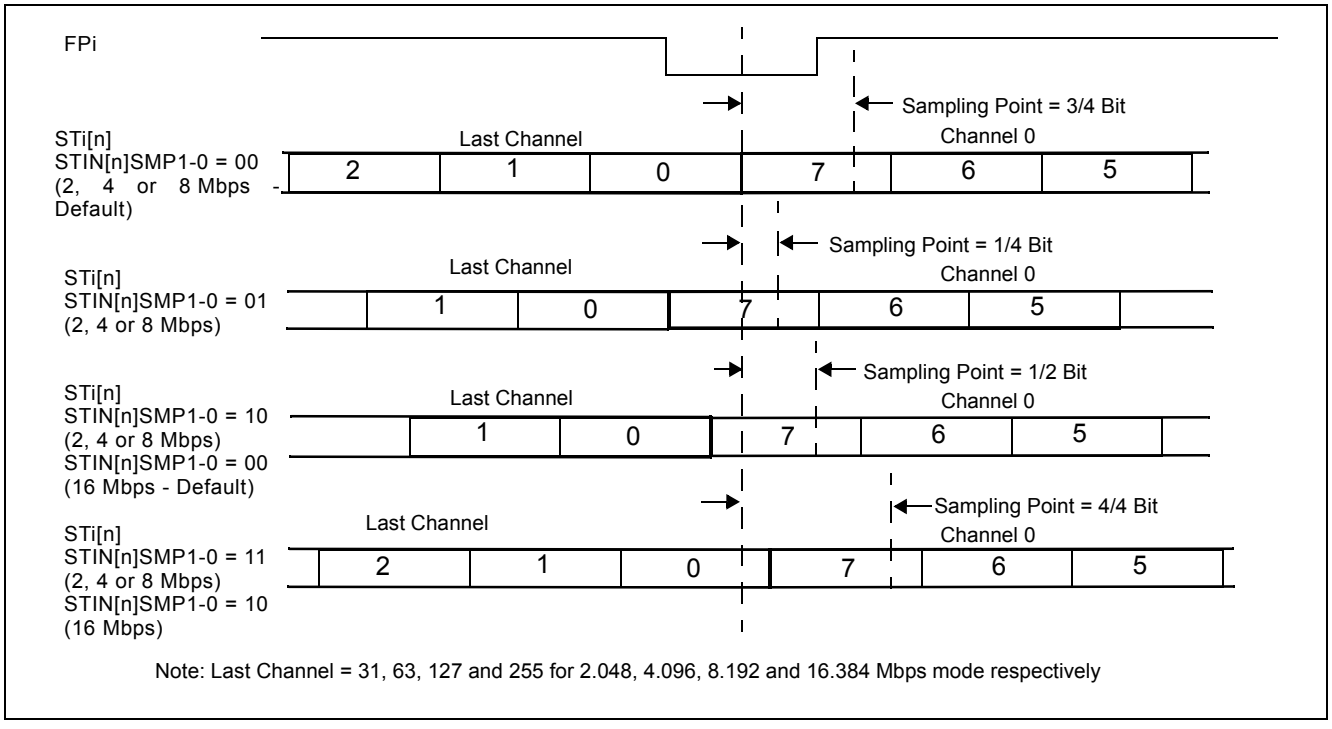


**Figure 12 - Input Bit Sampling Point Programming**

The input delay is controlled by STIN[n]BD2-0 (bits 8 - 6) to control the bit shift and STIN[n]SMP1 - 0 (bits 5 - 4) to control the sampling point in the Stream Input Control Register 0 - 31 (SICR0 - 31).

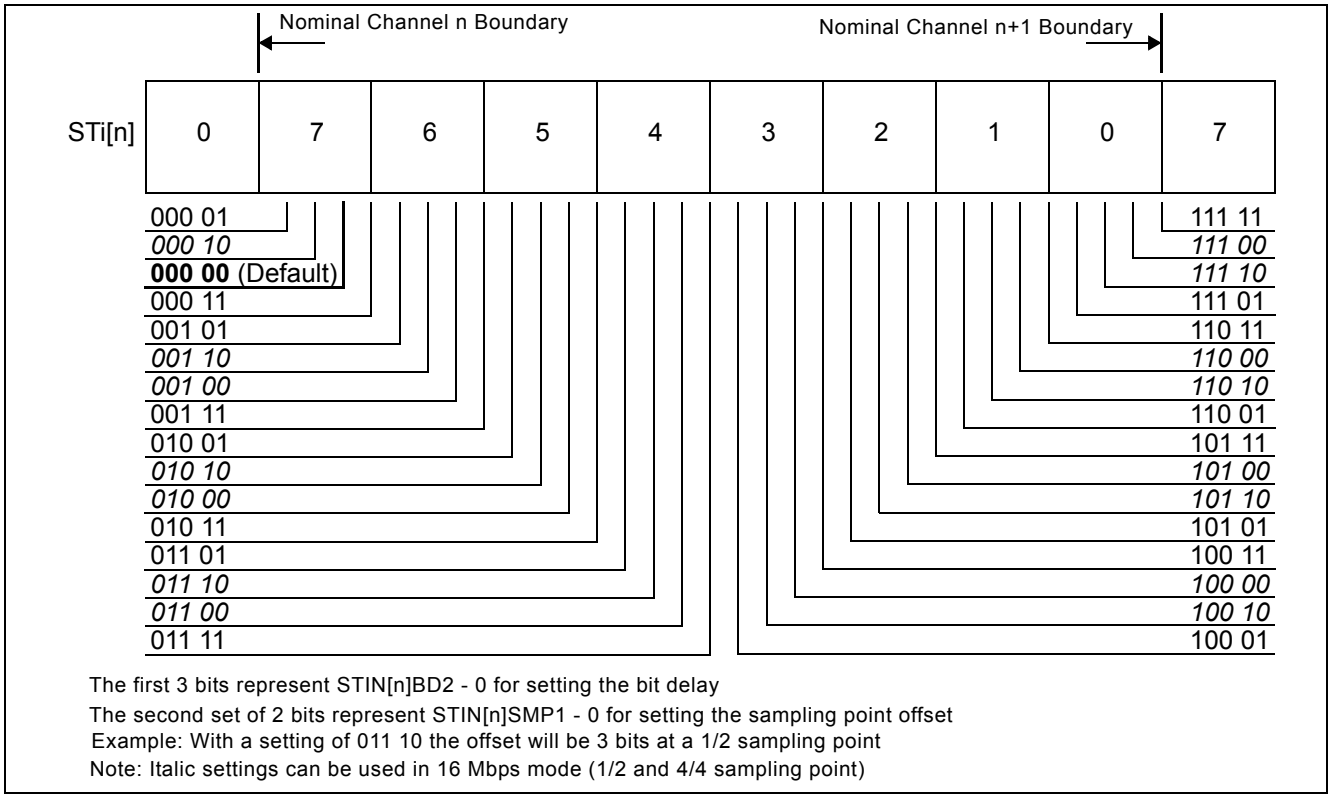


**Figure 13 - Input Bit Delay and Factional Sampling Point**

## 7.3 Output Advancement Programming

This feature is used to advance the output data of individual output streams with respect to the output frame boundary. Each output stream has its own bit advancement value which can be programmed in the Stream Output Control Register 0 - 31 (SOCR0 - 31).

By default, all output streams have zero bit advancement such that bit 7 is the first bit that appears after the output frame boundary (assuming ST-BUS formatting). The output advancement is enabled by STO[n]AD 2 - 0 (bits 6 - 4) of the Stream Output Control Register 0 - 31 (SOCR0 - 31) as described in Table 26 on page 54. The output bit advancement can vary from 0 to 7 bits.

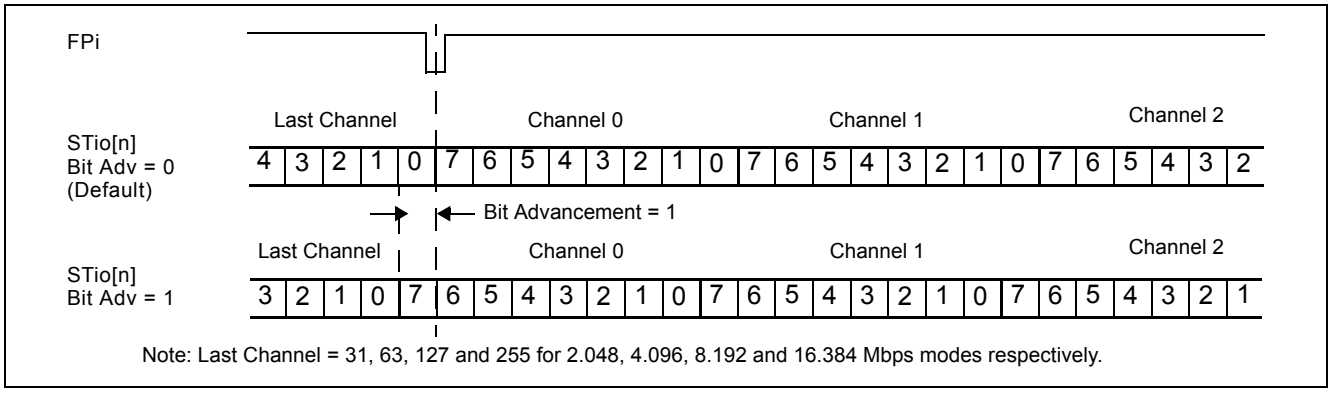


**Figure 14 - Output Bit Advancement Timing Diagram (ST-BUS)**

## 7.4 Fractional Output Bit Advancement Programming

In addition to the output bit advancement, the device has a fractional output bit advancement feature that offers better resolution. The fractional output bit advancement is useful in compensating for varying parasitic load on the serial data output pins.

By default all of the streams have zero fractional bit advancement such that bit 7 is the first bit that appears after the output frame boundary. The fractional output bit advancement is enabled by STO[n]FA 1 - 0 (bits 8 - 7) in the Stream Output Control Register 0 - 31 (SOCR0 - 31). For all streams running at any data rate except 16.384 Mbps the fractional bit advancement can vary from 0, 1/4, 1/2 to 3/4 bits. For streams operating at 16.384 Mbps, the fractional bit advancement can be set to either 0 or 1/2 bit.

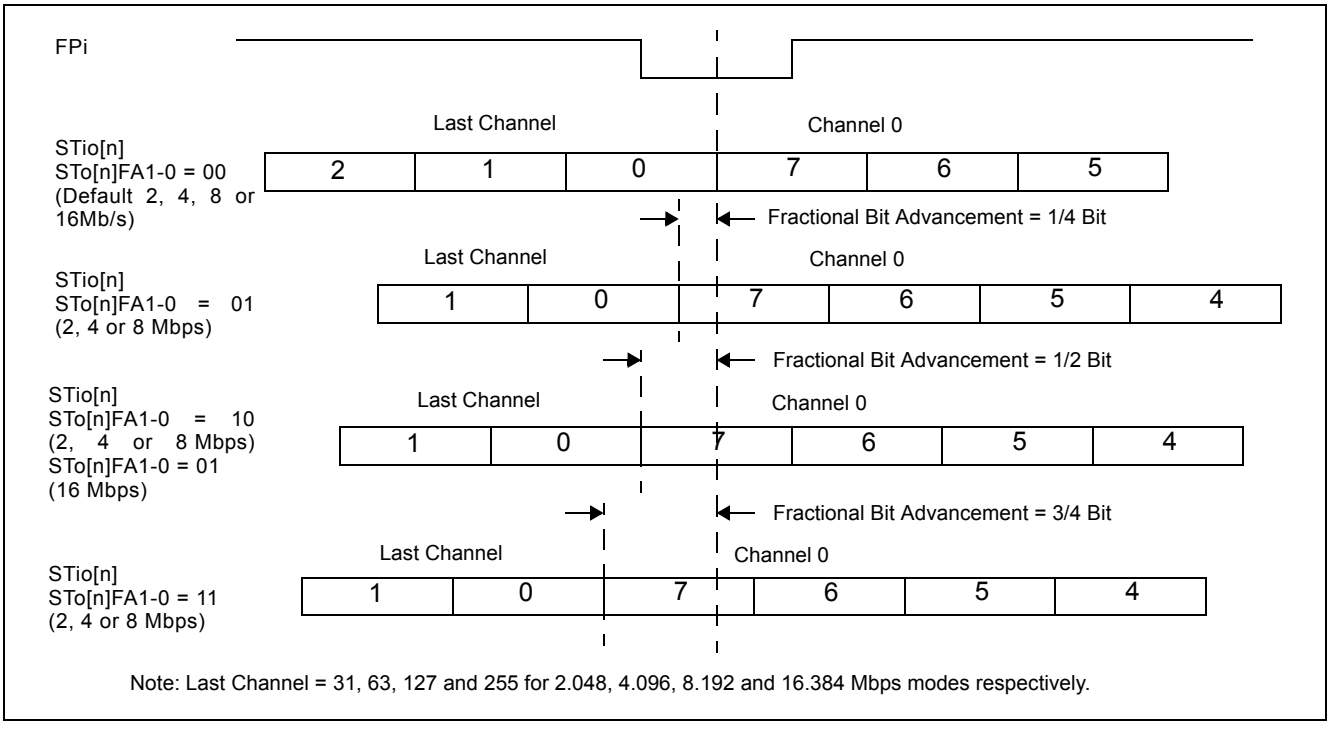


**Figure 15 - Output Fractional Bit Advancement Timing Diagram (ST-BUS)**

### 7.5 External High Impedance Control Advancement

The external high impedance signals can be programmed to better match the timing required by the external buffers. By default, the output timing of the STOHZ signals follows the programmed channel delay and bit offset of their corresponding ST-BUS/GCI-Bus output streams. In addition, for all high impedance streams operating at any data rate except 16.384 Mbps, the user can advance the STOHZ signals a further 0, 1/4, 1/2, 3/4 or 4/4 bits by programming STOHZ[n]A 2 - 0 (bit 11 - 9) in the Stream Output Control Register. When the stream is operating at 16.384 Mbps, the additional STOHZ advancement can be set to 0, 1/2 or 4/4 bits by programming the same register.

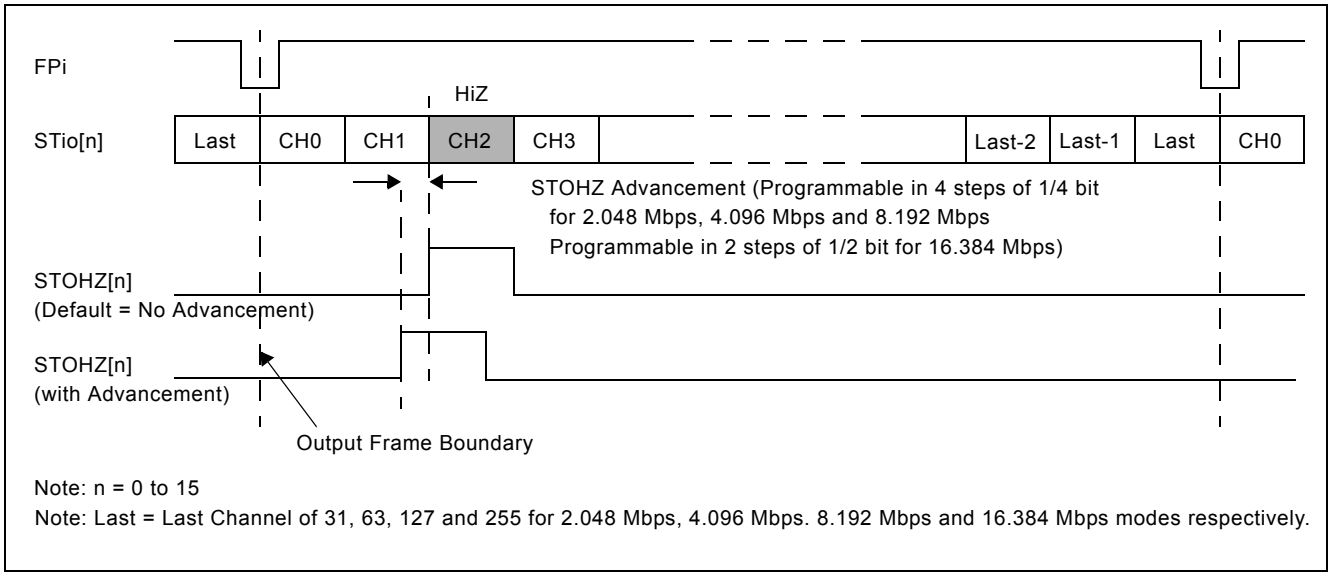


**Figure 16 - Channel Switching External High Impedance Control Timing**

## 8.0 Data Delay Through the Switching Paths

The switching of information from the input serial streams to the output serial streams results in a throughput delay. The device can be programmed to perform timeslot interchange functions with different throughput delay capabilities on a per-channel basis. For voice applications, select variable throughput delay to ensure minimum delay between input and output data. In wideband data applications, select constant delay to maintain the frame integrity of the information through the switch. The delay through the device varies according to the type of throughput delay selected by the V/$\overline{C}$ (bit 14) in the Connection Memory Low when CMM = 0.

### 8.1 Variable Delay Mode

Variable delay mode causes the output channel to be transmitted as soon as possible. This is a useful mode for voice applications where the minimum throughput delay is more important than frame integrity. The delay through the switch can vary from 7 channels to 1 frame + 7 channels. To set the device into variable delay mode, VAREN (bit 4) in the Control Register (CR) must be set before V/$\overline{C}$ (bit 14) in the Connection Memory Low when CMM = 0. If the VAREN bit is not set and the device is programmed for variable delay mode, the information read on the output stream will not be valid.

In variable delay mode, the delay depends on the combination of the source and destination channels of the input and output streams.

| m = input channel number<br>n = output channel number | n-m <= 0 | 0 < n-m < 7 | n-m = 7 | | n-m > 7 |
|---|---|---|---|---|---|
| | | | STio < STi | STio >= STi | |
| T = Delay between input and output | 1 frame - (m-n) | 1 frame + (n-m) | | n-m | |

**Table 4 - Delay for Variable Delay Mode**

For example, if Stream 4 Channel 2 is switched to Stream 5 Channel 9 with variable delay, the data will be output in the same 125 µs frame. Contrarily, if Stream 6 Channel 1 is switched to Stream 9 Channel 3, the information will appear in the following frame.

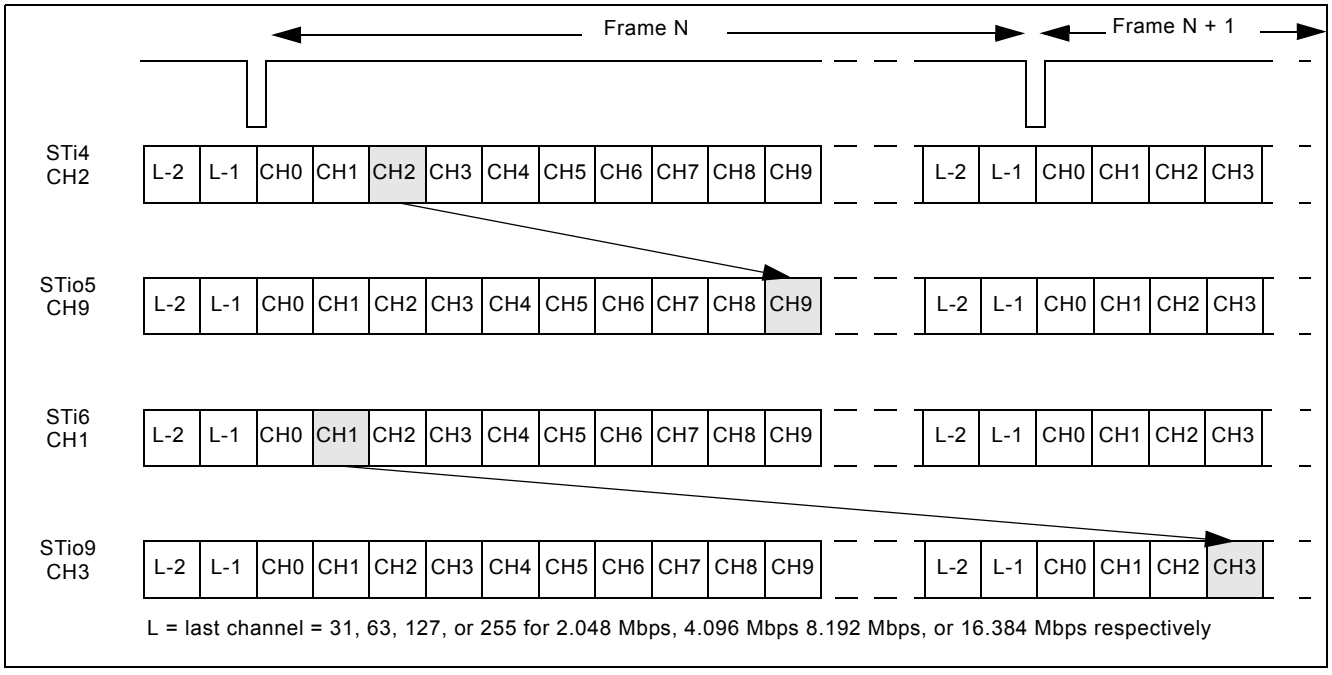


**Figure 17 - Data Throughput Delay for Variable Delay**

## 8.2 Constant Delay Mode

In this mode, frame integrity is maintained in all switching configurations. The delay though the switch is 2 frames - Input Channel + Output Channel. This can result in a minimum of 1 frame + 1 channel delay if the last channel on a stream is switched to the first channel of a stream. The maximum delay is 3 frames - 1 channel. This occurs when the first channel of a stream is switched to the last channel of a stream. The constant delay mode is available for all output channels.

The data throughput delay is expressed as a function of ST-BUS/GCI-Bus frames, input channel number (m) and output channel number (n). The data throughput delay (T) is:

**T = 2 frames + (n - m)**

The constant delay mode is controlled by V/$\overline{C}$ (bit 14) in the Connection Memory Low when CMM = 0. When this bit is set low, the channel is in constant delay mode. If VAREN (bit 4) in the Control Register (CR) is set (to enable variable throughput delay on a chip-wide basis), the device can still be programmed to operate in constant delay mode.

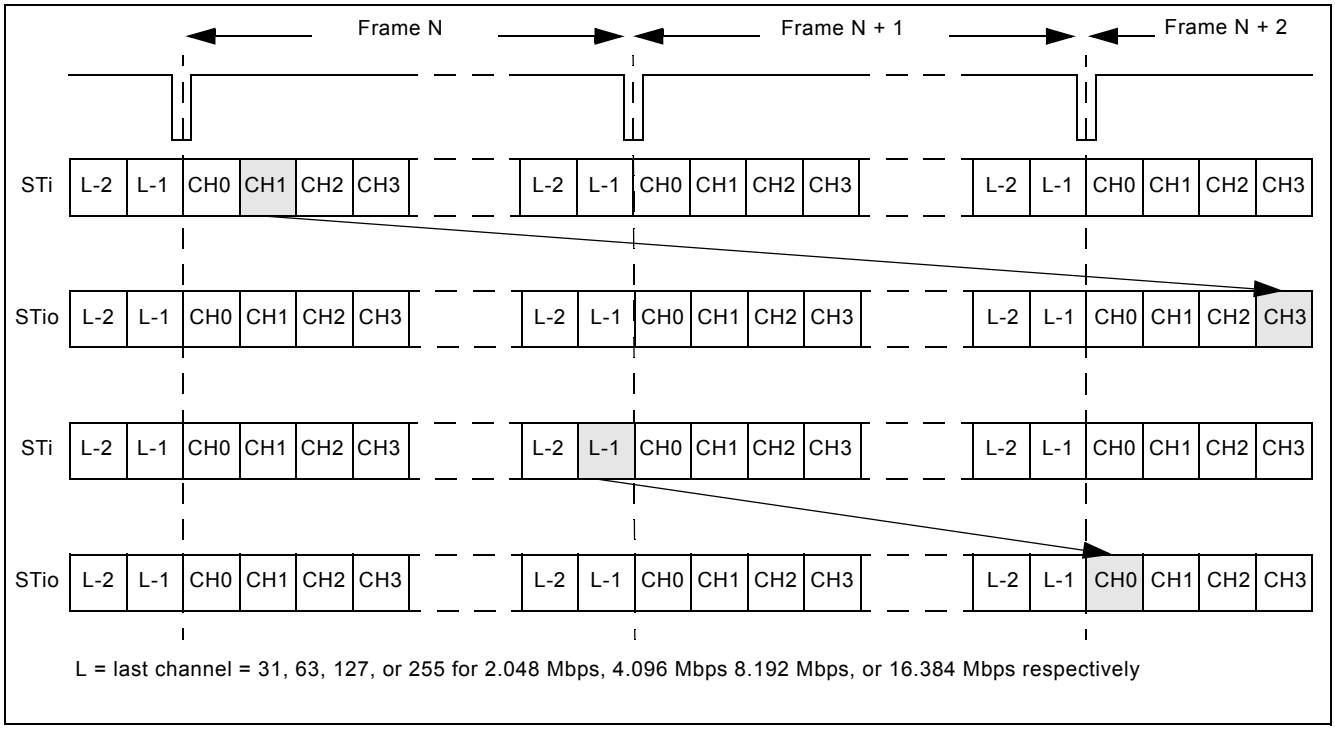


**Figure 18 - Data Throughput Delay for Constant Delay**

## 9.0 Connection Memory Description

The connection memory consists of two blocks, Connection Memory Low (CM_L) and Connection Memory High (CM_H). The CM_L is 16 bits wide and is used for channel switching and other special modes. The CM_H is 5 bits wide and is used for the voice coding function. When UAEN (bit 15) of the Connection Memory Low (CM_L) is low, μ-law/A-law conversion will be turned off and the contents of CM_H will be ignored. Each connection memory location of the CM_L or CM_H can be read or written via the 16 bit microprocessor port within one microprocessor access cycle. See Table 31 on page 57 for the address mapping of the connection memory. Any unused bits will be reset to zero on the 16-bit data bus.

For the normal channel switching operation, CMM (bit 0) of the Connection Memory Low (CM_L) is programmed low. SCA7 - 0 (bits 8 - 1) indicate the source (input) channel address and SSA4 - 0 (bits 13 - 9) indicate the source (input) stream address. The 5-bit contents of the CM_H will be ignored during the normal channel switching mode without the μ-law/A-law conversion when UAEN (bit 15) of the Connection Memory Low (CM_L) is set to zero. If μ-law/A-law conversion is required, the CM_H bits must be programmed first to provide the voice/data information, the input coding law and the output coding law before the assertion of UAEN (bit 15) in the Connection Memory Low.

When CMM (bit 0) of the Connection Memory Low (CM_L) is programmed high, the ZL50020 will operate in one of the special modes described in Table 33 on page 58. When the per-channel message mode is enabled, MSG7 - 0 (bit 10 - 3) in the Connection Memory Low (CM_L) will be output via the serial data stream as message output data. When the per-channel message mode is enabled, the μ-law/A-law conversion can also be enabled as required.

## 10.0 Connection Memory Block Programming

This feature allows for fast initialization of the connection memory after power up.

### 10.1 Memory Block Programming Procedure

1. Set MBPE (bit 3) in the Control Register (CR) from low to high.
2. Configure BPD2 - 0 (bits 3 - 1) in the Internal Mode Selection (IMS) register to the desired values to be loaded into CM_L.
3. Start the block programming by setting MBPS (bit 0) in the Internal Mode Selection Register (IMS) high. The values stored in BPD2 - 0 will be loaded into bits 2 - 0 of all CM_L positions. The remaining CM_L locations (bits 15 - 3) and the programmable values in the CM_H (bits 4 - 0) will be loaded with zero values.

The following tables show the resulting values that are in the CM_L and CM_H connection memory locations.

| Bit | 15 | 14 | 13 | 12 | 11 | 10 | 9 | 8 | 7 | 6 | 5 | 4 | 3 | 2 | 1 | 0 |
|---|---|---|---|---|---|---|---|---|---|---|---|---|---|---|---|---|
| Value | 0 | 0 | 0 | 0 | 0 | 0 | 0 | 0 | 0 | 0 | 0 | 0 | 0 | BPD2 | BPD1 | BPD0 |

**Table 5 - Connection Memory Low After Block Programming**

| Bit | 15 | 14 | 13 | 12 | 11 | 10 | 9 | 8 | 7 | 6 | 5 | 4 | 3 | 2 | 1 | 0 |
|---|---|---|---|---|---|---|---|---|---|---|---|---|---|---|---|---|
| Value | 0 | 0 | 0 | 0 | 0 | 0 | 0 | 0 | 0 | 0 | 0 | 0 | 0 | 0 | 0 | 0 |

**Table 6 - Connection Memory High After Block Programming**

Note: Bits 15 to 5 are reserved in Connection Memory High and should always be 0.

It takes at least two frame periods (250 μs) to complete a block program cycle.

MBPS (bit 0) in the Control Register (CR) will automatically reset to a low position after the block programming process has completed.

MBPE (bit 3) in the Internal Mode Selection (IMS) register must be cleared from high to low to terminate the block programming process. This is not an automatic action taken by the device and must be performed manually.

**Note**: Once the block program has been initiated, it can be terminated at any time prior to completion by setting MBPS (bit 0) in the Control Register (CR) or MBPE (bit 3) in the Internal Mode Selection (IMS) register to low. If the MBPE bit was used to terminate the block programming, the MBPS bit will have to be set low before enabling other device operations.

## 11.0 Device Operation in Divided Clock and Multiplied Clock Modes

This device has two main operating modes - Divided Clock mode and Multiplied Clock mode.

In Multiplied Clock mode, output clocks and frame pulses are generated from an internal high-speed clock synchronized to CKi and FPi. Therefore, all specified output clock rates and data rates are available on CKo0-3 and STio0-31. In Divided Clock mode, output clocks and frame pulses are directly divided from CKi/FPi. Therefore, the output clock rate cannot exceed the CKi rate (the output data rates are also limited as per Table 1). The input data rate cannot exceed the CKi rate in either Multiplied or Divided Clock modes, because input data are always sampled directly by CKi.

Table 7, “ZL50020 Operating Modes” on page 32 summarizes the different modes of operation available within the ZL50020. Each Major mode (explained below) has an associated Minor mode that is determined by setting the MODE_4M Input Control pins and the OPM bit in the Control Register (Table 13, “Control Register (CR) Bits” on page 39) indicated in the table.

| Device | | Input Pins | | CR Register | Output Clock Pins | | Data Pins | |
|---|---|---|---|---|---|---|---|---|
| Operating Mode | | Control | Signal | Bit | Reference Lock | Enabled | Clock Source | |
| Major | Minor | MODE_4M [1:0] | CKi | OPM | CKo0-3 | CKo0-3 | STi | STo |
| Divided Clock | 4 M | 11 | 4 M | 0 | CKi | Yes | CKi | CKo0-3 (CKi) |
| | 8/16 M | 00 | 8/16 M | | | | | |
| Multiplied Clock | 4 M | 11 | 4 M | 1 | CKi MULT | | | CKo0-3 (CKi MULT) |
| | 8/16 M | 00 | 8/16 M | | | | | |

Legend:

X Don’t care or not applicable.

Reference Lock Refers to what signal the output pins are locked to:
Cki = Bypass. Cki is passed directly through to CKo0-3.
Cki MULT = Cki is passed through clock multiplier to CKo0-3.

Clock Source Refers to which clock samples STi and which clock outputs STo; STi applies when STio is input; STo applies when STio is output.

**Table 7 - ZL50020 Operating Modes**

## 11.1 Divided Clock Mode Operation

When the device is in Divided Clock mode, STio0 - 31 are driven by CKi. In this mode, the output streams and clocks have the same amount of jitter as the input clock (CKi), but the output data rate cannot exceed the input data rate defined by CKi. For example, if CKi is 4.096 MHz, the input and output data rate cannot be higher than 2.048 Mbps, and the generated output clock rates cannot exceed 4.096 MHz.

## 11.2 Multiplied Clock Mode Operation

When the device is in Multiplied Clock mode, device hardware is used to multiply CKi internally. STio0 - are driven by this internally generated clock. In this mode, the output clocks and data can run at any of the specified rates, but they may have different jitter characteristics from the input clock (CKi). The input data rates are still limited by the CKi rate (as per Table 1), as input data are always sampled directly by CKi.

## 11.3 Output Clock Frequencies

The device can generate a limited number of clock and frame pulse output signals. All signals are synchronous to each other and are locked to the input CKi and FPi. The device can provide outputs with the following frequencies, with the exception that when in Divided Clock mode, the output clock rate cannot exceed the input CKi rate.

| | |
|---|---|
| CKo0 | 4.096 MHz |
| CKo1 | 8.192 MHz |
| CKo2 | 16.384 MHz |
| CKo3 | 4.096 MHz, 8.192 MHz, 16.384 MHz or 32.768 MHz |
| FPo0 | 8 kHz (244 ns wide pulse) |
| FPo1 | 8 kHz (122 ns wide pulse) |
| FPo2 | 8 kHz (61 ns wide pulse) |
| FPo3 | 8 kHz (244 ns, 122 ns, 61 ns or 30 ns wide pulse) |

**Table 8 - Generated Output Frequencies**

## 12.0 Microprocessor Port

The device provides access to the internal registers, connection memories and data memories via the microprocessor port. The microprocessor port is capable of supporting both Motorola and Intel non-multiplexed microprocessors. The microprocessor port consists of a 16-bit parallel data bus (D15 - 0), 14 bit address bus (A13 - 0) and six control signals (MOT_INTEL, $\overline{CS}$, $\overline{DS}$_$\overline{RD}$, R/$\overline{W}$_$\overline{WR}$ and $\overline{DTA}$_RDY).

The data memory can only be read from the microprocessor port. For a data memory read operation, D7 - 0 will be used and D15 - 8 will output zeros.

For a CM_L read or write operation, all bits (D15 - 0) of the data bus will be used. For a CM_H write operation, D4 - 0 of the data bus must be configured and D15 - 5 are ignored. D15 - 5 must be driven either high or low. For a CM_H read operation, D4 - 0 will be used and D15 - 5 will output zeros.

Refer to Figure 20 on page 63, Figure 21 on page 64, Figure 22 on page 65 and Figure 23 on page 66 for the microprocessor timing.

## 13.0 Device Reset and Initialization

The $\overline{RESET}$ pin is used to reset the ZL50020. When this pin is low, the following functions are performed:

- synchronously puts the microprocessor port in a reset state
- tristates the STio0 - 31 outputs
- drives the STOHZ0 - 15 outputs to high
- preloads all internal registers with their default values (refer to the individual registers for default values)
- clears all internal counters

### 13.1 Power-up Sequence

The recommended power-up sequence is for the $V_{DD_IO}$ supply (normally +3.3 V) to be established before the power-up of the $V_{DD_CORE}$ supply (normally +1.8 V). The $V_{DD_CORE}$ supply may be powered up at the same time as $V_{DD_IO}$, but should not “lead” the $V_{DD_IO}$ supply by more than 0.3 V.

### 13.2 Device Initialization on Reset

Upon power up, the ZL50020 should be initialized as follows:

- Set the ODE pin to low to disable the STio0 - 31 outputs and to drive STOHZ0 - 15 to high
- Set the $\overline{TRST}$ pin to low to disable the JTAG TAP controller
- Reset the device by pulsing the $\overline{RESET}$ pin to zero for longer than 1 μs
- After releasing the $\overline{RESET}$ pin from low to high, wait for a certain period of time (see Note below) for the device to stabilize from the power down state before the first microprocessor port access can occur
- Program CKIN1 - 0 (bit 6 -5) in the Control Register (CR) to define the frequency of the CKi and FPi inputs
- Wait at least 500 μs prior to the next microport access (see Note below)
- Use the block programming mode to initialize the connection memory
- Release the ODE pin from low to high after the connection memory is programmed

**Note**: If CKi is 16.384 MHz, the waiting time is 500 μs; if CKi is 8.192 MHz, the waiting time is 1 ms; if CKi is 4.096 MHz, the waiting time is 2 ms.

### 13.3 Software Reset

In addition to the hardware reset from the $\overline{\text{RESET}}$ pin, the device can also be reset by using software reset SRSTSW (bit 1) in the Software Reset Register (SRR).

## 14.0 Pseudo Random Bit Generation and Error Detection

The ZL50020 has one Bit Error Rate (BER) transmitter and one BER receiver for each pair of input and output streams, resulting in 32 transmitters connected to the output streams and 32 receivers associated with the input streams. Each transmitter can generate a BER sequence with a pattern of $2^{15}$-1 pseudorandom code (ITU O.151). Each transmitter can start at any location on the stream and will last for a minimum of 1 channel to a maximum of 1 frame time (125 μs). The BER receivers and transmitters are enabled by programming the RBEREN (bit 5) and TBEREN (bit 4) in the IMS register. In order to save power, the 32 transmitters and/or receivers can be disabled. (This is the default state.)

Multiple connection memory locations can be programmed for BER tests such that the BER patterns can be transmitted for multiple consecutive output channels. If consecutive input channels are not selected, the BER receiver will not compare the bit patterns correctly. The number of output channels which the BER pattern occupies has to be the same as the number of channels defined in the BER Length Register (BRLR) which defines how many BER channels are to be monitored by the BER receiver.

For each input stream, there is a set of registers for the BER test. The registers are as follows:

- BER Receiver Control Register (**BRCR**) - ST[n]CBER (bit 1) is used to clear the Bit Receiver Error Register (BRER). ST[n]SBER (bit 0) is used to enable the per-stream BER receiver.
- BER Receiver Start Register (**BRSR**) - ST[n]BRS7 - 0 (bit 7 - 0) defines the input channel from which the BER sequence will start to be compared.
- BER Receiver Length Register (**BRLR**) - ST[n]BL8 - 0 (bit 8 - 0) define how many channels the sequence will last. Depending on the data rate being used, the BER test can last for a maximum of 32, 64, 128 or 256channels at the data rates of 2.048, 4.096, 8.192or 16.384Mbps, respectively. The minimum length of the BER test is a single channel. The user must take care to program the correct channel length for the BER test so that the channel length does not exceed the total number of channels available in the stream.
- BER Receiver Error Register (**BRER**) - This read-only register contains the number of counted errors. When the error count reaches 0xFFFF, the BER counter will stop updating so that it will not overflow. ST[n]CBER (bit 1) in the BER Receiver Control Register is used to reset the BRER register.

For normal BER operation, CMM (bit 0) must be 1 in the Connection Memory Low (CM_L). PCC1 - 0 (bits 2 - 1) in the Connection Memory Low must be programmed to “10” to enable the per-stream based BER transmitters. For each stream, the length (or total number of channels) of BER testing can be as long as one whole frame, but the channels MUST be consecutive. Upon completion of programming the connection memory, the corresponding BER receiver can be started by setting ST[n]SBER (bit 0) in the BRCR to high. There must be at least 2 frames (250 μs) between completion of connection memory programming and starting the BER receiver before the BER receiver can correctly identify BER errors. A 16 bit BER counter is used to count the number of bit errors.

## 15.0 PCM A-law/μ-law Translation

The ZL50020 provides per-channel code translation to be used to adapt pulse code modulation (PCM) voice or data traffic between networks which use different encoding laws. Code translation is valid in both Connection Mode and Message Mode.

In order to use this feature, the Connection Memory High (CM_H) entry for the output channel must be programmed. $\overline{V}$/D (bit 4) defines if the traffic in the channel is voice or data. Setting ICL1 - 0 (bits 3 - 2) programs the input coding law and OCL1 - 0 (bits 1- 0) programs the output coding law as shown in Table 9.

The different code options are:

| Input Coding (ICL1- 0) | Output Coding (OCL1 - 0) | Voice Coding ($\overline{V}$/D bit = 0) | Data Coding ($\overline{V}$/D bit = 1) |
|---|---|---|---|
| 00 | 00 | ITU-T G.711 A-law | No code |
| 01 | 01 | ITU-T G.711 μ-law | Alternate Bit Inversion (ABI) |
| 10 | 10 | A-law without Alternate Bit Inversion (ABI) | Inverted Alternate Bit Inversion (ABI) |
| 11 | 11 | μ-law without Magnitude Inversion (MI) | All bits inverted |

**Table 9 - Input and Output Voice and Data Coding**

For voice coding options, the ITU-T G.711 A-law and ITU-T G.711 μ-law are the standard rules for encoding. A-law without Alternate Bit Inversion (ABI) is an alternative code that does not invert the even bits (6, 4, 2, 0). μ-law without Magnitude Inversion (MI) is an alternative code that does not perform inversion of magnitude bits (6, 5, 4, 3, 2, 1, 0).

When transferring data code, the option “no code” does not invert the bits. The Alternate Bit Inversion (ABI) option inverts the even bits (6, 4, 2, 0) while the Inverted Alternate Bit Inversion (ABI) inverts the odd bits (7, 5, 3, 1). When the “All bits inverted” option is selected, all of the bits (7, 6, 5, 4, 3, 2, 1, 0) are inverted.

The input channel and output channel encoding law are configured independently. If the output channel coding is set to be different from the input channel, the ZL50020 performs translation between the two standards. If the input and output encoding laws are set to the same standard, no translation occurs. As the $\overline{V}$/D (bit 4) of the Connection Memory High (CM_H) must be set on a per-channel basis, it is not possible to translate between voice and data encoding laws.

## 16.0 Quadrant Frame Programming

By programming the Stream Input Quadrant Frame Registers (SIQFR0 - 31), users can divide one frame of input data into four quadrant frames and can force the LSB or MSB of every input channel in these quadrants to one or zero for robbed-bit signaling. The four quadrant frames are defined as follows:

| Data Rate | Quadrant 0 | Quadrant 1 | Quadrant 2 | Quadrant 3 |
|---|---|---|---|---|
| 2.048 Mbps | Channel 0 - 7 | Channel 8 - 15 | Channel 16 - 23 | Channel 24 - 31 |
| 4.096 Mbps | Channel 0 - 15 | Channel 16 - 31 | Channel 32 - 47 | Channel 48 - 63 |
| 8.192 Mbps | Channel 0 - 31 | Channel 32 - 63 | Channel 64 - 95 | Channel 96 - 127 |
| 16.384 Mbps | Channel 0 - 63 | Channel 64 - 127 | Channel 128 - 191 | Channel 192 - 255 |

**Table 10 - Definition of the Four Quadrant Frames**

When the quadrant frame control bits, STIN[n]Q3C2 - 0 (bit 11 - 9), STIN[n]Q2C2 - 0 (bit 8 - 6), STIN[n]Q1C2 - 0 (bit 5 - 3) or STIN[n]Q1C2 - 0 (bit 2 - 0), are set, the LSB or MSB of every input channel in the quadrant is forced to “1” or “0” as shown by the following table:

| STIN[n]Q[y]C[2:0] | Action |
|---|---|
| 0xx | Normal Operation |
| 100 | Replaces LSB of every channel in Quadrant y with ‘0’ |
| 101 | Replaces LSB of every channel in Quadrant y with ‘1’ |
| 110 | Replaces MSB of every channel in Quadrant y with ‘0’ |
| 111 | Replaces MSB of every channel in Quadrant y with ‘1’ |
| **Note:** y = 0, 1, 2, 3 | |

**Table 11 - Quadrant Frame Bit Replacement**

Note that Quadrant Frame Programming and BER reception cannot be used simultaneously on the same input stream.

## 17.0 JTAG Port

The JTAG test port is implemented to meet the mandatory requirements of the IEEE-1149.1 (JTAG) standard. The operation of the boundary-scan circuitry is controlled by an external Test Access Port (TAP) Controller.

### 17.1 Test Access Port (TAP)

The Test Access Port (TAP) accesses the ZL50020 test functions. It consists of three input pins and one output pin as follows:

- **Test Clock Input (TCK)** - TCK provides the clock for the test logic. TCK does not interfere with any on-chip clock and thus remains independent in the functional mode. TCK permits shifting of test data into or out of the Boundary-Scan register cells concurrently with the operation of the device and without interfering with the on-chip logic.
- **Test Mode Selection Inputs (TMS)** - The TAP Controller uses the logic signals received at the TMS input to control test operations. The TMS signals are sampled at the rising edge of the TCK pulse. This pin is internally pulled to high when it is not driven from an external source.
- **Test Data Input (TDi)** - Serial input data applied to this port is fed either into the instruction register or into a test data register, depending on the sequence previously applied to the TMS input. The registers are described in a subsequent section. The received input data is sampled at the rising edge of the TCK pulse. This pin is internally pulled to high when it is not driven from an external source.
- **Test Data Output (TDo)** - Depending on the sequence previously applied to the TMS input, the contents of either the instruction register or test data register are serially shifted out towards TDo. The data from TDo is clocked on the falling edge of the TCK pulses. When no data is shifted through the boundary scan cells, the TDo driver is set to a high impedance state.
- **Test Reset ($\overline{\text{TRST}}$)** - Resets the JTAG scan structure. This pin is internally pulled to high when it is not driven from an external source.

## 17.2 Instruction Register

The ZL50020 uses the public instructions defined in the IEEE-1149.1 standard. The JTAG interface contains a four-bit instruction register. Instructions are serially loaded into the instruction register from the TDi when the TAP Controller is in its shifted-OR state. These instructions are subsequently decoded to achieve two basic functions: to select the test data register that may operate while the instruction is current and to define the serial test data register path that is used to shift data between TDi and TDo during data register scanning.

## 17.3 Test Data Registers

As specified in the IEEE-1149.1 standard, the ZL50020 JTAG interface contains three test data registers:

- **The Boundary-Scan Register** - The Boundary-Scan register consists of a series of boundary-scan cells arranged to form a scan path around the boundary of the ZL50020 core logic.
- **The Bypass Register** - The Bypass register is a single stage shift register that provides a one-bit path from TDi to TDo.
- **The Device Identification Register** - The JTAG device ID for the ZL50020 is $0C36414B_H$

| | | |
|---|---|---|
| Version | <31:28> | 0000 |
| Part Number | <27:12> | 1100 0011 0110 0100 |
| Manufacturer ID | <11:1> | 0001 0100 101 |
| LSB | <0> | 1 |

## 17.4 BSDL

A Boundary Scan Description Language (BSDL) file is available from Zarlink Semiconductor to aid in the use of the IEEE-1149.1 test interface.

## 18.0 Register Address Mapping

| Address A13 - A0 | CPU Access | Register Name | Abbreviation | Reset By |
|---|---|---|---|---|
| $0000_H$ | R/W | Control Register | CR | Switch/Hardware |
| $0001_H$ | R/W | Internal Mode Selection Register | IMS | Switch/Hardware |
| $0002_H$ | R/W | Software Reset Register | SRR | Hardware Only |
| $0003_H$ | R/W | Output Clock and Frame Pulse Control Register | OCFCR | Hardware |
| $0004_H$ | R/W | Output Clock and Frame Pulse Selection Register | OCFSR | Hardware |
| $0005_H$ | R/W | FPo_OFF0 Register | FPOFF0 | Hardware |
| $0006_H$ | R/W | FPo_OFF1 Register | FPOFF1 | Hardware |
| $0007_H$ | R/W | FPo_OFF2 Register | FPOFF2 | Hardware |
| $0010_H$ | R Only | Internal Flag Register | IFR | Switch/Hardware |
| $0011_H$ | R Only | BER Error Flag Register 0 | BERFR0 | Switch/Hardware |
| $0012_H$ | R Only | BER Error Flag Register 1 | BERFR1 | Switch/Hardware |
| $0013_H$ | R Only | BER Receiver Lock Register 0 | BERLR0 | Switch/Hardware |
| $0014_H$ | R Only | BER Receiver Lock Register 1 | BERLR1 | Switch/Hardware |
| $0100_H$ - $011F_H$ | R/W | Stream Input Control Registers 0 - 31 | SICR0 - 31 | Switch/Hardware |
| $0120_H$ - $013F_H$ | R/W | Stream Input Quadrant Frame Registers 0 - 31 | SIQFR0 - 31 | Switch/Hardware |
| $0200_H$ - $021F_H$ | R/W | Stream Output Control Registers 0 - 31 | SOCR0 - 31 | Switch/Hardware |
| $0300_H$ - $031F_H$ | R/W | BER Receiver Start Registers 0 - 31 | BRSR0 - 31 | Switch/Hardware |
| $0320_H$ - $033F_H$ | R/W | BER Receiver Length Registers 0 - 31 | BRLR0 - 31 | Switch/Hardware |
| $0340_H$ - $035F_H$ | R/W | BER Receiver Control Registers 0 - 31 | BRCR0 - 31 | Switch/Hardware |
| $0360_H$ - $037F_H$ | R Only | BER Receiver Error Registers 0 - 31 | BRER0 - 31 | Switch/Hardware |

**Table 12 - Address Map for Registers (A13 = 0)**

## 19.0 Detailed Register Description

External Read/Write Address: $0000_H$
Reset Value: $0000_H$

| 15 | 14 | 13 | 12 | 11 | 10 | 9 | 8 | 7 | 6 | 5 | 4 | 3 | 2 | 1 | 0 |
|---|---|---|---|---|---|---|---|---|---|---|---|---|---|---|---|
| 0 | 0 | 0 | 0 | OPM | 0 | FPIN POS | CKINP | FPINP | CKIN 1 | CKIN 0 | VAR EN | MBPE | OSB | MS1 | MS0 |

| Bit | Name | Description |
|---|---|---|
| 15 - 12 | Unused | **Reserved.** In normal functional mode, these bits **MUST** be set to zero. |
| 11 | OPM | **Operation Mode.**<br>This bit is used to set the device in Master/Slave operation. Refer to Table 7, “ZL50020 Operating Modes” on page 32 for more details. |
| 10 | Unused | **Reserved.** In normal functional mode, this bits **MUST** be set to zero. |
| 9 | FPINPOS | **Input Frame Pulse (FPi) Position**<br>When this bit is low, FPi straddles frame boundary (as defined by ST-BUS).<br>When this bit is high, FPi starts from frame boundary (as defined by GCI-Bus) |
| 8 | CKINP | **Clock Input (CKi) Polarity**<br>When this bit is low, the CKi falling edge aligns with the frame boundary.<br>When this bit is high, the CKi rising edge aligns with the frame boundary. |
| 7 | FPINP | **Frame Pulse Input (FPi) Polarity**<br>When this bit is low, the input frame pulse FPi has the negative frame pulse format.<br>When this bit is high, the input frame pulse FPi has the positive frame pulse format. |
| 6 - 5 | CKIN1 - 0 | **Input Clock (CKi) and Frame Pulse (FPi) Selection**<br>CKIN1 - 0 / FPi Active Period / CKi<br>00 / 61 ns / 16.384 MHz<br>01 / 122 ns / 8.192 MHz<br>10 / 244 ns / 4.096 MHz<br>11 / Reserved<br>The MODE_4M0 and MODE_4M1 pins, as described in “Pin Description” on page 10, should also be set to define the input clock mode. |
| 4 | VAREN | **Variable Delay Mode Enable**<br>When this bit is low, the variable delay mode is disabled on a device-wide basis.<br>When this bit is high, the variable delay mode is enabled on a device-wide basis. |
| 3 | MBPE | **Memory Block Programming Enable**<br>When this bit is high, the connection memory block programming mode is enabled to program the connection memory. When it is low, the memory block programming mode is disabled. |

**Table 13 - Control Register (CR) Bits**

External Read/Write Address: $0000_H$
Reset Value: $0000_H$

| 15 | 14 | 13 | 12 | 11 | 10 | 9 | 8 | 7 | 6 | 5 | 4 | 3 | 2 | 1 | 0 |
|---|---|---|---|---|---|---|---|---|---|---|---|---|---|---|---|
| 0 | 0 | 0 | 0 | OPM | 0 | FPIN POS | CKINP | FPINP | CKIN 1 | CKIN 0 | VAR EN | MBPE | OSB | MS1 | MS0 |

| Bit | Name | Description |
|---|---|---|
| 2 | OSB | **Output Stand By Bit:**<br>This bit enables the STio0 - 31 and the STOHZ0 -15 serial outputs. The following table describes the HiZ control of the serial data outputs:<br><br>$\overline{\text{RESET}}$ Pin / SRSTSW (in SRR) / ODE Pin / OSB Bit / STio0 - 31 / STOHZ0 - 15<br>0 / X / X / X / HiZ / Driven High<br>1 / 1 / X / X / HiZ / Driven High<br>1 / 0 / 0 / X / HiZ / Driven High<br>1 / 0 / 1 / 0 / HiZ / Driven High<br>1 / 0 / 1 / 1 / Active (Controlled by CM) / Active (Controlled by CM)<br><br>Note: Unused output streams are tristated (STio = HiZ, STOHZ = Driven High). Refer to SOCR0 - 31 (bit2 - 0). |
| 1 - 0 | MS1 - 0 | **Memory Select Bits**<br>These two bits are used to select connection memory low, connection high or data memory for access by CPU:<br><br>MS1 - 0 / Memory Selection<br>00 / Connection Memory Low Read/Write<br>01 / Connection Memory High Read/Write<br>10 / Data Memory Read<br>11 / Reserved |

**Table 13 - Control Register (CR) Bits (continued)**

External Read/Write Address: $0001_H$
Reset Value: $0000_H$

| 15 | 14 | 13 | 12 | 11 | 10 | 9 | 8 | 7 | 6 | 5 | 4 | 3 | 2 | 1 | 0 |
|---|---|---|---|---|---|---|---|---|---|---|---|---|---|---|---|
| 0 | 0 | 0 | 0 | 0 | 0 | 0 | STIO_ PD_EN | BDH | BDL | RBER EN | TBER EN | BPD 2 | BPD 1 | BPD 0 | MBPS |

| Bit | Name | Description |
|---|---|---|
| 15 - 9 | Unused | **Reserved.** In normal functional mode, these bits **MUST** be set to zero. |
| 8 | STIO_PD_ EN | **STio Pull-down Enable**<br>When this bit is low, the pull-down resistors on all STio pads will be disabled.<br>When this bit is high, the pull-down resistors on all STio pads will be enabled. |
| 7 | BDH | **Bi-directional Control for Streams 16-31**<br><br>**BDH** — **STio16 - 31 Operation**<br>0 — normal operation: STi16-31 are inputs, STio16-31 are outputs<br>1 — bi-directional operation: STi16-31 tied low internally, STio16-31 are bi-directional |
| 6 | BDL | **Bi-directional Control for Streams 0-15**<br><br>**BDL** — **STio0 - 15 Operation**<br>0 — normal operation: STi0-15 are inputs, STio0-15 are outputs<br>1 — bi-directional operation: STi0-15 tied low internally, STio0-15 are bi-directional |
| 5 | RBEREN | **PRBS Receiver Enable**<br>When this bit is low, all the BER receivers are disabled. To enable any BER receivers, this bit **MUST** be high. |
| 4 | TBEREN | **PRBS Transmitter Enable**<br>When this bit is low, all the BER transmitters are disabled. To enable any BER transmitters, this bit **MUST** be high. |

**Table 14 - Internal Mode Selection Register (IMS) Bits**

External Read/Write Address: $0001_H$
Reset Value: $0000_H$

| 15 | 14 | 13 | 12 | 11 | 10 | 9 | 8 | 7 | 6 | 5 | 4 | 3 | 2 | 1 | 0 |
|---|---|---|---|---|---|---|---|---|---|---|---|---|---|---|---|
| 0 | 0 | 0 | 0 | 0 | 0 | 0 | STIO_ PD_EN | BDH | BDL | RBER EN | TBER EN | BPD 2 | BPD 1 | BPD 0 | MBPS |

| Bit | Name | Description |
|---|---|---|
| 3 - 1 | BPD2 - 0 | **Block Programming Data**<br>These bits refer to the value to be loaded into the connection memory, whenever the memory block programming feature is activated. After the MBPE bit in the Control Register is set to high and the MBPS bit in this register is set to high, the contents of the bits BPD2 - 0 are loaded into bits 2 - 0 of the Connection Memory Low. Bits 15 - 3 of the Connection Memory Low and bits 15 - 0 of Connection Memory High are zeroed. |
| 0 | MBPS | **Memory Block Programming Start:**<br>A zero to one transition of this bit starts the memory block programming function. The MBPS and BPD2 - 0 bits in this register must be defined in the same write operation. Once the MBPE bit in the Control Register is set to high, the device requires two frames to complete the block programming. After the programming function has finished, the MBPS bit returns to low, indicating the operation is completed. When MBPS is high, MBPS or MBPE can be set to low to abort the programming operation.<br>Whenever the microprocessor writes a one to the MBPS bit, the block programming function is started. As long as this bit is high, the user must maintain the same logical value to the other bits in this register to avoid any change in the device setting. |

**Table 14 - Internal Mode Selection Register (IMS) Bits (continued)**

External Read/Write Address: $0002_H$
Reset Value: $0000_H$

| 15 | 14 | 13 | 12 | 11 | 10 | 9 | 8 | 7 | 6 | 5 | 4 | 3 | 2 | 1 | 0 |
|---|---|---|---|---|---|---|---|---|---|---|---|---|---|---|---|
| 0 | 0 | 0 | 0 | 0 | 0 | 0 | 0 | 0 | 0 | 0 | 0 | 0 | 0 | SRST SW | 0 |

| Bit | Name | Description |
|---|---|---|
| 15 - 2 | Unused | **Reserved**<br>In normal functional mode, these bits **MUST** be set to zero. |
| 1 | SRSTSW | **Software Reset Bit for Switch**<br>When this bit is low, switching blocks are in normal operation. When this bit is high, switching blocks are in software reset state. Refer to Table 12, “Address Map for Registers (A13 = 0)” on page 32 for details regarding which registers are affected. |
| 0 | Unused | **Reserved**<br>In normal functional mode, these bits **MUST** be set to zero. |

**Table 15 - Software Reset Register (SRR) Bits**

External Read/Write Address: $0003_H$
Reset Value: $0000_H$

| 15 | 14 | 13 | 12 | 11 | 10 | 9 | 8 | 7 | 6 | 5 | 4 | 3 | 2 | 1 | 0 |
|---|---|---|---|---|---|---|---|---|---|---|---|---|---|---|---|
| 0 | 0 | 0 | 0 | 0 | 0 | 0 | FPOF2 EN | FPOF1 EN | FPOF0 EN | 0 | 0 | CKO FPO3 EN | CKO FPO2 EN | CKO FPO1 EN | CKO FPO0 EN |

| Bit | Name | Description |
|---|---|---|
| 15 - 9 | Unused | **Reserved**<br>In normal functional mode, these bits **MUST** be set to zero. |
| 8 | FPOF2EN | **FPo_OFF2 Enable**<br>When this bit is high, output frame pulse FPo_OFF2<br>When this bit is low, output frame pulse FPo_OFF2. |
| 7 | FPOF1EN | **FPo_OFF1 Enable**<br>When this bit is high, output frame pulse FPo_OFF1 is enabled.<br>When this bit is low, output frame pulse FPo_OFF1 is in high impedance state. |
| 6 | FPOF0EN | **FPo_OFF0 Enable**<br>When this bit is high, output frame pulse FPo_OFF0 is enabled.<br>When this bit is low, output frame pulse FPo_OFF0 is in high impedance state. |
| 5 | Unused | **Reserved**<br>In normal functional mode, these bits **MUST** be set to zero. |
| 4 | Unused | **Reserved**<br>In normal functional mode, these bits **MUST** be set to zero. |
| 3 | CKOFPO3 EN | **CKo3 and FPo3 Enable**<br>When this bit is high, output clock CKo3 and output frame pulse FPo3 are enabled.<br>When this bit is low, CKo3 and FPo3 are in high impedance state. |
| 2 | CKOFPO2 EN | **CKo2 and FPo2 Enable**<br>When this bit is high, output clock CKo2 and output frame pulse FPo2 are enabled.<br>When this bit is low, CKo2 and FPo2 are in high impedance state. |
| 1 | CKOFPO1 EN | **CKo1 and FPo1 Enable**<br>When this bit is high, output clock CKo1 and output frame pulse FPo1 are enabled.<br>When this bit is low, CKo1 and FPo1 are in high impedance state. |
| 0 | CKOFPO0 EN | **CKo0 and FPo0 Enable**<br>When this bit is high, output clock CKo0 and output frame pulse FPo0 are enabled.<br>When this bit is low, CKo0 and FPo0 are in high impedance state. |

**Table 16 - Output Clock and Frame Pulse Control Register (OCFCR) Bits**

External Read/Write Address: $0004_H$
Reset Value: $0000_H$

| 15 | 14 | 13 | 12 | 11 | 10 | 9 | 8 | 7 | 6 | 5 | 4 | 3 | 2 | 1 | 0 |
|---|---|---|---|---|---|---|---|---|---|---|---|---|---|---|---|
| 0 | 0 | CKO FPO3 SEL1 | CKO FPO3 SEL0 | CKO3 P | FPO3 P | FPO3 POS | CKO2 P | FPO2 P | FPO2 POS | CKO1 P | FPO1 P | FPO1 POS | CKO0 P | FPO0 P | FPO0 POS |

| Bit | Name | Description |
|---|---|---|
| 15 - 14 | Unused | **Reserved**<br>In normal functional mode, these bits **MUST** be set to zero. |
| 13 - 12 | CKOFPO3 SEL1 - 0 | **Output Clock (CKo3) Frequency and Output Frame Pulse (FPo3) Pulse Cycle Selection**<br>CKOFPO3 SEL1 - 0 / FPo3 / CKo3<br>00 / 244 ns / 4.096 MHz<br>01 / 122 ns / 8.192 MHz<br>10 / 61 ns / 16.384 MHz<br>11 / 30 ns / 32.768 MHz |
| 11 | CKO3P | **Output Clock (CKo3) Polarity Selection**<br>When this bit is low, the output clock CKo3 falling edge aligns with the frame boundary. When this bit is high, the output clock CKo3 rising edge aligns with the frame boundary. |
| 10 | FPO3P | **Output Frame Pulse (FPo3) Polarity Selection**<br>When this bit is low, the output frame pulse FPo3 has the negative frame pulse format. When this bit is high, the output frame pulse FPo3 has the positive frame pulse format. |
| 9 | FPO3POS | **Output Frame Pulse (FPo3) Position**<br>When this bit is low, FPo3 straddles frame boundary (as defined by ST-BUS).<br>When this bit is high, FPo3 starts from frame boundary (as defined by GCI-Bus). |
| 8 | CKO2P | **Output Clock (CKo2) Polarity Selection**<br>When this bit is low, the output clock CKo2 falling edge aligns with the frame boundary. When this bit is high, the output clock CKo2 rising edge aligns with the frame boundary. |
| 7 | FPO2P | **Output Frame Pulse (FPo2) Polarity Selection**<br>When this bit is low, the output frame pulse FPo2 has the negative frame pulse format. When this bit is high, the output frame pulse FPo2 has the positive frame pulse format. |
| 6 | FPO2POS | **Output Frame Pulse (FPo2) Position**<br>When this bit is low, FPo2 straddles frame boundary (as defined by ST-BUS).<br>When this bit is high, FPo2 starts from frame boundary (as defined by GCI-Bus). |

**Table 17 - Output Clock and Frame Pulse Selection Register (OCFSR) Bits**

External Read/Write Address: $0004_H$
Reset Value: $0000_H$

| 15 | 14 | 13 | 12 | 11 | 10 | 9 | 8 | 7 | 6 | 5 | 4 | 3 | 2 | 1 | 0 |
|---|---|---|---|---|---|---|---|---|---|---|---|---|---|---|---|
| 0 | 0 | CKO FPO3 SEL1 | CKO FPO3 SEL0 | CKO3 P | FPO3 P | FPO3 POS | CKO2 P | FPO2 P | FPO2 POS | CKO1 P | FPO1 P | FPO1 POS | CKO0 P | FPO0 P | FPO0 POS |

| Bit | Name | Description |
|---|---|---|
| 5 | CKO1P | **Output Clock (CKo1) Polarity Selection**<br>When this bit is low, the output clock CKo1 falling edge aligns with the frame boundary. When this bit is high, the output clock CKo1 rising edge aligns with the frame boundary. |
| 4 | FPO1P | **Output Frame Pulse (FPo1) Polarity Selection**<br>When this bit is low, the output frame pulse FPo1 has the negative frame pulse format. When this bit is high, the output frame pulse FPo1 has the positive frame pulse format. |
| 3 | FPO1POS | **Output Frame Pulse (FPo1) Position**<br>When this bit is low, FPo1 straddles frame boundary (as defined by ST-BUS).<br>When this bit is high, FPo1 starts from frame boundary (as defined by GCI-Bus). |
| 2 | CKO0P | **Output Clock (CKo0) Polarity Selection**<br>When this bit is low, the output clock CKo0 falling edge aligns with the frame boundary. When this bit is high, the output clock CKo0 rising edge aligns with the frame boundary. |
| 1 | FPO0P | **Output Frame Pulse (FPo0) Polarity Selection**<br>When this bit is low, the output frame pulse FPo0 has the negative frame pulse format. When this bit is high, the output frame pulse FPo0 has the positive frame pulse format. |
| 0 | FPO0POS | **Output Frame Pulse (FPo0) Position**<br>When this bit is low, FPo0 straddles frame boundary (as defined by ST-BUS).<br>When this bit is high, FPo0 starts from frame boundary (as defined by GCI-Bus). |

Note: In Divided Clock modes, CKo3 - 1 cannot exceed frequency of CKi.

**Table 17 - Output Clock and Frame Pulse Selection Register (OCFSR) Bits (continued)**

External Read/Write Address: $0005_H$ - $0007_H$
Reset Value: $0000_H$

| 15 | 14 | 13 | 12 | 11 | 10 | 9 | 8 | 7 | 6 | 5 | 4 | 3 | 2 | 1 | 0 |
|---|---|---|---|---|---|---|---|---|---|---|---|---|---|---|---|
| 0 | 0 | 0 | 0 | 0 | 0 | FOF[n] OFF7 | FOF[n] OFF6 | FOF[n] OFF5 | FOF[n] OFF4 | FOF[n] OFF3 | FOF[n] OFF2 | FOF[n] OFF1 | FOF[n] OFF0 | FOF[n] C1 | FOF[n] C0 |

| Bit | Name | Description |
|---|---|---|
| 15 - 10 | Unused | **Reserved.** In normal functional mode, these bits **MUST** be set to zero. |
| 9 - 2 | FOF[n]OFF7 - 0 | **FPo_OFF[n] Channel Offset**<br>The binary value of these bits refers to the channel offset from original frame boundary. Permitted channel offset values depend on bits 1-0 of this register. |
| 1 - 0 | FOF[n]C1 - 0 | **FPo_OFF[n] Control bits** |

| FOF[n]C 1-0 | Data Rate (Mbps) | FPo_OFF[n] Pulse Cycle Width | FOF[n]OFF7 - 0 Permitted Channel Offset | Polarity Control | Position Control |
|---|---|---|---|---|---|
| 00 | 2.048 | one 4.096 MHz clock | 0 - 31 | FPO0P | FPO0POS |
| 01 | 4.096 | one 8.192 MHz clock | 0 - 63 | FPO1P | FPO1POS |
| 10 | 8.192 | one 16.384 MHz clock | 0 - 127 | FPO2P | FPO2POS |
| 11 | 16.384 | one 16.384 MHz clock | 0 - 255 | FPO2P | FPO2POS |

Note: [n] denotes output offset frame pulse from 0 to 2.

**Table 18 - FPo_OFF[n] Register (FPo_OFF[n]) Bits**

External Read Address: $0010_H$
Reset Value: $0000_H$

| 15 | 14 | 13 | 12 | 11 | 10 | 9 | 8 | 7 | 6 | 5 | 4 | 3 | 2 | 1 | 0 |
|---|---|---|---|---|---|---|---|---|---|---|---|---|---|---|---|
| 0 | 0 | 0 | 0 | 0 | 0 | 0 | 0 | 0 | 0 | 0 | 0 | 0 | 0 | OUT ERR | IN ERR |

| Bit | Name | Description |
|---|---|---|
| 15 - 2 | Unused | **Reserved**<br>In normal functional mode, these bits are zero. |
| 1 | OUTERR | **Output Error (Read Only)**<br>This bit is set high when the total number of output channels is programmed to be more than the maximum capacity of 2048, in which case the output channels beyond the maximum capacity should be disabled.<br>This bit will be cleared automatically after programming is corrected. |
| 0 | INERR | **Input Error (Read Only)**<br>This bit is set high when the total number of input channels is programmed to be more than the maximum capacity of 2048, in which case the input channels beyond the maximum capacity should be disabled.This bit will be cleared automatically after programming is corrected. |

**Table 19 - Internal Flag Register (IFR) Bits - Read Only**

External Read Address: $00011_H$
Reset Value: $0000_H$

| 15 | 14 | 13 | 12 | 11 | 10 | 9 | 8 | 7 | 6 | 5 | 4 | 3 | 2 | 1 | 0 |
|---|---|---|---|---|---|---|---|---|---|---|---|---|---|---|---|
| BER F15 | BER F14 | BER F13 | BER F12 | BER F11 | BER F10 | BER F9 | BER F8 | BER F7 | BER F6 | BER F5 | BER F4 | BER F3 | BER F2 | BER F1 | BER F0 |

| Bit | Name | Description |
|---|---|---|
| 15 - 0 | BERF[n] | **BER Error Flag[n]:**<br>If BERF[n] is high, it indicates that BER Receiver Error Register [n] (BRER[n]) is not zero.<br>If BERF[n] is low, it indicates that BER Receiver Error Register [n] (BRER[n]) is zero. |

Note: [n] denotes input stream from 0 - 15.

**Table 20 - BER Error Flag Register 0 (BERFR0) BIts - Read Only**

External Read/Write Address: $00012_H$
Reset Value: $0000_H$

| 15 | 14 | 13 | 12 | 11 | 10 | 9 | 8 | 7 | 6 | 5 | 4 | 3 | 2 | 1 | 0 |
|---|---|---|---|---|---|---|---|---|---|---|---|---|---|---|---|
| BER F31 | BER F30 | BER F29 | BER F28 | BER F27 | BER F26 | BER F25 | BER F24 | BER F23 | BER F22 | BER F21 | BER F20 | BER F19 | BER F18 | BER F17 | BER F16 |

| Bit | Name | Description |
|---|---|---|
| 15 - 0 | BERF[n] | **BER Error Flag[n]:**<br>If BERF[n] is high, it indicates that BER Receiver Error Register [n] (BRER[n]) is not zero.<br>If BERF[n] is low, it indicates that BER Receiver Error Register [n] (BRER[n]) is zero. |
| Note: [n] denotes input stream from 16 - 31. | | |

**Table 21 - BER Error Flag Register 1 (BERFR1) Bits - Read Only**

External Read Address: $00013_H$
Reset Value: $0000_H$

| 15 | 14 | 13 | 12 | 11 | 10 | 9 | 8 | 7 | 6 | 5 | 4 | 3 | 2 | 1 | 0 |
|---|---|---|---|---|---|---|---|---|---|---|---|---|---|---|---|
| BER L15 | BER L14 | BER L13 | BER L12 | BER L11 | BER L10 | BER L9 | BER L8 | BER L7 | BER L6 | BER L5 | BER L4 | BER L3 | BER L2 | BER L1 | BER L0 |

| Bit | Name | Description |
|---|---|---|
| 15 - 0 | BERL[n] | **BER Receiver Lock[n]**<br>If BERL[n] is high, it indicates that BER Receiver of STi[n] is locked.<br>If BERL[n] is low, it indicates that BER Receiver of STi[n] is not locked. |
| Note: [n] denotes input stream from 0 - 15. | | |

**Table 22 - BER Receiver Lock Register 0 (BERLR0) Bits - Read Only**

External Read Address: $00014_H$
Reset Value: $0000_H$

| 15 | 14 | 13 | 12 | 11 | 10 | 9 | 8 | 7 | 6 | 5 | 4 | 3 | 2 | 1 | 0 |
|---|---|---|---|---|---|---|---|---|---|---|---|---|---|---|---|
| BER L31 | BER L30 | BER L29 | BER L28 | BER L27 | BER L26 | BER L25 | BER L24 | BER L23 | BER L22 | BER L21 | BER L20 | BER L19 | BER L18 | BER L17 | BER L16 |

| Bit | Name | Description |
|---|---|---|
| 15 - 0 | BERL[n] | **BER Receiver Lock[n]:**<br>If BERL[n] is high, it indicates that BER Receiver of STi[n] is locked.<br>If BERL[n] is low, it indicates that BER Receiver of STi[n] is not locked. |
| Note: [n] denotes input stream from 16 - 31. | | |

**Table 23 - BER Receiver Lock Register 1 (BERLR1) Bits - Read Only**

External Read/Write Address: $0100_H$ - $011F_H$
Reset Value: $0000_H$

| 15 | 14 | 13 | 12 | 11 | 10 | 9 | 8 | 7 | 6 | 5 | 4 | 3 | 2 | 1 | 0 |
|---|---|---|---|---|---|---|---|---|---|---|---|---|---|---|---|
| 0 | 0 | 0 | 0 | 0 | 0 | 0 | STIN[n] BD2 | STIN[n] BD1 | STIN[n] BD0 | STIN[n] SMP1 | STIN[n] SMP0 | STIN[n] DR3 | STIN[n] DR2 | STIN[n] DR1 | STIN[n] DR0 |

| Bit | Name | Description |
|---|---|---|
| 15 - 9 | Unused | **Reserved**<br>In normal functional mode, these bits **MUST** be set to zero. |
| 8 - 6 | STIN[n]BD2 - 0 | **Input Stream[n] Bit Delay Bits.**<br>The binary value of these bits refers to the number of bits that the input stream will be delayed relative to FPi. The maximum value is 7. Zero means no delay. |
| 5 - 4 | STIN[n]SMP1 - 0 | **Input Data Sampling Point Selection Bits** |

| STIN[n]SMP1-0 | Sampling Point (2.048 Mbps, 4.096 Mbps, 8.192 Mbps streams) | Sampling Point (16.384 Mbps streams) |
|---|---|---|
| 00 | 3/4 point | 2/4 point |
| 01 | 1/4 point | |
| 10 | 2/4 point | 4/4 point |
| 11 | 4/4 point | |

**Table 24 - Stream Input Control Register 0 - 31 (SICR0 - 31) Bits**

External Read/Write Address: $0100_H$ - $011F_H$
Reset Value: $0000_H$

| 15 | 14 | 13 | 12 | 11 | 10 | 9 | 8 | 7 | 6 | 5 | 4 | 3 | 2 | 1 | 0 |
|---|---|---|---|---|---|---|---|---|---|---|---|---|---|---|---|
| 0 | 0 | 0 | 0 | 0 | 0 | 0 | STIN[n] BD2 | STIN[n] BD1 | STIN[n] BD0 | STIN[n] SMP1 | STIN[n] SMP0 | STIN[n] DR3 | STIN[n] DR2 | STIN[n] DR1 | STIN[n] DR0 |

| Bit | Name | Description |
|---|---|---|
| 3 - 0 | STIN[n]DR3 - 0 | **Input Data Rate Selection Bits:** |

| STIN[n]DR3-0 | Data Rate |
|---|---|
| 0000 | Stream Unused |
| 0001 | 2.048 Mbps |
| 0010 | 4.096 Mbps |
| 0011 | 8.192 Mbps |
| 0100 | 16.384 Mbps |
| 0101 - 1111 | Reserved |

Note: [n] denotes input stream from 0 - 31.

**Table 24 - Stream Input Control Register 0 - 31 (SICR0 - 31) Bits (continued)**

External Read/Write Address: $0120_H$ - $013F_H$
Reset Value: $0000_H$

| 15 | 14 | 13 | 12 | 11 | 10 | 9 | 8 | 7 | 6 | 5 | 4 | 3 | 2 | 1 | 0 |
|---|---|---|---|---|---|---|---|---|---|---|---|---|---|---|---|
| 0 | 0 | 0 | 0 | STIN[n] Q3C2 | STIN[n] Q3C1 | STIN[n] Q3C0 | STIN[n] Q2C2 | STIN[n] Q2C1 | STIN[n] Q2C0 | STIN[n] Q1C2 | STIN[n] Q1C1 | STIN[n] Q1C0 | STIN[n] Q0C2 | STIN[n] Q0C1 | STIN[n] Q0C0 |

| Bit | Name | Description |
|---|---|---|
| 15 - 12 | Unused | **Reserved**<br>In normal functional mode, these bits **MUST** be set to zero. |
| 11 - 9 | STIN[n]Q3C2 - 0 | **Quadrant Frame 3 Control Bits**<br>These three bits are used to control STi[n]'s quadrant frame 3, which is defined as Ch24 to 31, Ch48 to 63, Ch96 to 127 and Ch192 to 255 for the 2.048 Mbps, 4.096 Mbps, 8.192 Mbps, and 16.384 Mbps modes respectively.<br><br>STIN[n]Q3C 2-0 — Operation<br>0xx — normal operation<br>100 — LSB of each channel is replaced by "0"<br>101 — LSB of each channel is replaced by "1"<br>110 — MSB of each channel is replaced by "0"<br>111 — MSB of each channel is replaced by "1" |
| 8 - 6 | STIN[n]Q2C2 - 0 | **Quadrant Frame 2 Control Bits**<br>These three bits are used to control STi[n]'s quadrant frame 2, which is defined as Ch16 to 23, Ch32 to 47, Ch64 to 95 and Ch128 to 191 for the 2.048 Mbps, 4.096 Mbps 8.192 Mbps, and 16.384 Mbps modes respectively.<br><br>STIN[n]Q2C 2-0 — Operation<br>0xx — normal operation<br>100 — LSB of each channel is replaced by "0"<br>101 — LSB of each channel is replaced by "1"<br>110 — MSB of each channel is replaced by "0"<br>111 — MSB of each channel is replaced by "1" |

**Table 25 - Stream Input Quadrant Frame Register 0 - 31 (SIQFR0 - 31) Bits**

External Read/Write Address: $0120_H$ - $013F_H$
Reset Value: $0000_H$

| 15 | 14 | 13 | 12 | 11 | 10 | 9 | 8 | 7 | 6 | 5 | 4 | 3 | 2 | 1 | 0 |
|---|---|---|---|---|---|---|---|---|---|---|---|---|---|---|---|
| 0 | 0 | 0 | 0 | STIN[n] Q3C2 | STIN[n] Q3C1 | STIN[n] Q3C0 | STIN[n] Q2C2 | STIN[n] Q2C1 | STIN[n] Q2C0 | STIN[n] Q1C2 | STIN[n] Q1C1 | STIN[n] Q1C0 | STIN[n] Q0C2 | STIN[n] Q0C1 | STIN[n] Q0C0 |

| Bit | Name | Description |
|---|---|---|
| 5 - 3 | STIN[n]Q1C2 - 0 | **Quadrant Frame 1 Control Bits**<br>these three bits are used to control STi[n]'s quadrant frame 1, which is defined as Ch8 to 15, Ch16 to 31, Ch32 to 63 and Ch64 to 127 for the 2.048 Mbps, 4.096 Mbps, 8.192 Mbps, and 16.384 Mbps modes respectively.<br><br>STIN[n]Q1C 2-0 / Operation<br>0xx: normal operation<br>100: LSB of each channel is replaced by "0"<br>101: LSB of each channel is replaced by "1"<br>110: MSB of each channel is replaced by "0"<br>111: MSB of each channel is replaced by "1" |
| 2 - 0 | STIN[n]Q0C2 - 0 | **Quadrant Frame 0 Control Bits**<br>These three bits are used to control STi[n]'s quadrant frame 0, which is defined as Ch0 to 7, Ch0 to 15, Ch0 to 31 and Ch0 to 63 for the 2.048 Mbps, 4.096 Mbps, 8.192 Mbps, and 16.384 Mbps modes respectively.<br><br>STIN[n]Q0C2-0 / Operation<br>0xx: normal operation<br>100: LSB of each channel is replaced by "0"<br>101: LSB of each channel is replaced by "1"<br>110: MSB of each channel is replaced by "0"<br>111: MSB of each channel is replaced by "1" |

Note: [n] denotes input stream from 0 - 31.

**Table 25 - Stream Input Quadrant Frame Register 0 - 31 (SIQFR0 - 31) Bits (continued)**

External Read/Write Address: $0200_H$ - $021F_H$
Reset Value: $0000_H$

| 15 | 14 | 13 | 12 | 11 | 10 | 9 | 8 | 7 | 6 | 5 | 4 | 3 | 2 | 1 | 0 |
|---|---|---|---|---|---|---|---|---|---|---|---|---|---|---|---|
| 0 | 0 | 0 | 0 | STOHZ [n]A2 | STOHZ [n]A1 | STOHZ [n]A0 | STO[n] FA1 | STO[n] FA0 | STO[n] AD2 | STO[n] AD1 | STO[n] AD0 | STO[n] DR3 | STO[n] DR2 | STO[n] DR1 | STO[n] DR0 |

| Bit | Name | Description |
|---|---|---|
| 15 - 12 | Unused | **Reserved**<br>In normal functional mode, these bits **MUST** be set to zero. |
| 11 - 9 | STOHZ[n]A2 - 0<br>(Valid only for STio0-15) | **STOHZ Additional Advancement Bits** |

| STOHZ[n]A2-0 | Additional Advancement (2.048 Mbps, 4.096 Mbps, 8.192 Mbps) | Additional Advancement (16.384 Mbps streams) |
|---|---|---|
| 000 | 0 bit | 0 bit |
| 001 | 1/4 bit | 2/4 bit |
| 010 | 2/4 bit | 4/4 bit |
| 011 | 3/4 bit | Reserved |
| 100 | 4/4 bit | |
| 101-111 | Reserved | |

| Bit | Name | Description |
|---|---|---|
| 8 - 7 | STO[n]FA1 - 0 | **Output Stream[n] Fractional Advancement Bits** |

| STO[n]FA1-0 | Advancement (2.048 Mbps, 4.096 Mbps, 8.192 Mbps streams) | Advancement (16.384 Mbps streams) |
|---|---|---|
| 00 | 0 | 0 |
| 01 | 1/4 bit | 2/4 |
| 10 | 2/4 bit | Reserved |
| 11 | 3/4 bit | |

| Bit | Name | Description |
|---|---|---|
| 6 - 4 | STO[n]AD2 - 0 | **Output Stream[n] Bit Advancement Selection Bits**<br>The binary value of these bits refers to the number of bits that the output stream is to be advanced relative to FPo. The maximum value is 7. Zero means no advancement. |
| 3 - 0 | STO[n]DR3 - 0 | **Output Data Rate Selection Bits** |

| STIN[n]DR3 - 0 | Data Rate |
|---|---|
| 0000 | disabled: STio HiZ (STOHZ driven high) |
| 0001 | 2.048 Mbps |
| 0010 | 4.096 Mbps |
| 0011 | 8.192 Mbps |
| 0100 | 16.384 Mbps |
| 0101 - 1111 | Reserved |

Note: [n] denotes output stream from 0 - 31.

**Table 26 - Stream Output Control Register 0 - 31 (SOCR0 - 31) Bits**

External Read/Write Address: $0300_H$ - $031F_H$
Reset Value: $0000_H$

| 15 | 14 | 13 | 12 | 11 | 10 | 9 | 8 | 7 | 6 | 5 | 4 | 3 | 2 | 1 | 0 |
|---|---|---|---|---|---|---|---|---|---|---|---|---|---|---|---|
| 0 | 0 | 0 | 0 | 0 | 0 | 0 | 0 | ST[n] BRS7 | ST[n] BRS6 | ST[n] BRS5 | ST[n] BRS4 | ST[n] BRS3 | ST[n] BRS2 | ST[n] BRS1 | ST[n] BRS0 |

| Bit | Name | Description |
|---|---|---|
| 15 - 8 | Unused | **Reserved**<br>In normal functional mode, these bits **MUST** be set to zero. |
| 7 - 0 | ST[n] BRS7 - 0 | **Stream[n] BER Receive Start Bits**<br>The binary value of these bits refers to the input channel in which the BER data starts to be compared. |

Note: [n] denotes input stream from 0 - 31.

**Table 27 - BER Receiver Start Register [n] (BRSR[n]) Bits**

External Read/Write Address: $0320_H$ - $03F_H$
Reset Value: $0000_H$

| 15 | 14 | 13 | 12 | 11 | 10 | 9 | 8 | 7 | 6 | 5 | 4 | 3 | 2 | 1 | 0 |
|---|---|---|---|---|---|---|---|---|---|---|---|---|---|---|---|
| 0 | 0 | 0 | 0 | 0 | 0 | 0 | ST[n] BL8 | ST[n] BL7 | ST[n] BL6 | ST[n] BL5 | ST[n] BL4 | ST[n] BL3 | ST[n] BL2 | ST[n] BL1 | ST[n] BL0 |

| Bit | Name | Description |
|---|---|---|
| 15 - 9 | Unused | **Reserved**<br>In normal functional mode, these bits **MUST** be set to zero. |
| 8 - 0 | ST[n] BL8 - 0 | **Stream[n] BER Length Bits**<br>The binary value of these bits refers to the number of consecutive channels expected to receive the BER pattern. The maximum number of BER channels is 32, 64, 128 and 256 for the data rates of 2.048 Mbps, 4.096 Mbps, 8.192 Mbps and 16.384 Mbps respectively. The minimum number of BER channels is 1. If these bits are set to zero, no BER test will be performed. |

Note: [n] denotes input stream from 0 - 31.

**Table 28 - BER Receiver Length Register [n] (BRLR[n]) Bits**

External Read/Write Address: $0340_H$ - $035F_H$
Reset Value: $0000_H$

| 15 | 14 | 13 | 12 | 11 | 10 | 9 | 8 | 7 | 6 | 5 | 4 | 3 | 2 | 1 | 0 |
|---|---|---|---|---|---|---|---|---|---|---|---|---|---|---|---|
| 0 | 0 | 0 | 0 | 0 | 0 | 0 | 0 | 0 | 0 | 0 | 0 | 0 | 0 | ST[n] CBER | ST[n] SBER |

| Bit | Name | Description |
|---|---|---|
| 15 - 2 | Unused | **Reserved**<br>In normal functional mode, these bits **MUST** be set to zero. |
| 1 | ST[n] CBER | **Stream[n] Bit Error Rate Counter Clear**<br>When this bit is high, it resets the internal bit error counter and the stream BER Receiver Error Register to zero. |
| 0 | ST[n] SBER | **Stream[n] Bit Error Rate Test Start**<br>When this bit is high, it enables the BER receiver; starts the bit error rate test. The bit error test result is kept in the BER Receiver Error (BRER[n]) register. Upon the completion of the BER test, set this bit to zero. Note that the RBEREB bit must be set in the IMS Register first. |

Note: [n] denotes input stream from 0 - 31

**Table 29 - BER Receiver Control Register [n] (BRCR[n]) Bits**

External Read Address: $0360_H$ - $037F_H$
Reset Value: $0000_H$

| 15 | 14 | 13 | 12 | 11 | 10 | 9 | 8 | 7 | 6 | 5 | 4 | 3 | 2 | 1 | 0 |
|---|---|---|---|---|---|---|---|---|---|---|---|---|---|---|---|
| ST[n] BC15 | ST[n] BC14 | ST[n] BC13 | ST[n] BC12 | ST[n] BC11 | ST[n] BC10 | ST[n] BC9 | ST[n] BC8 | ST[n] BC7 | ST[n] BC6 | ST[n] BC5 | ST[n] BC4 | ST[n] BC3 | ST[n] BC2 | ST[n] BC1 | ST[n] BC0 |

| Bit | Name | Description |
|---|---|---|
| 15 - 0 | ST[n] BC15 - 0 | **Stream[n] BER Count Bits (Read Only)**<br>The binary value of these bits refers to the bit error counts. When it reaches its maximum value of 0xFFFF, the value will be held and will not rollover. |

Note: [n] denotes input stream from 0 - 31

**Table 30 - BER Receiver Error Register [n] (BRER[n]) Bits - Read Only**

# 20.0 Memory

## 20.1 Memory Address Mappings

When A13 is high, the data or connection memory can be accessed by the microprocessor port. Bit 1 - 0 in the Control Register determine the access to the data or connection memory (CM_L or CM_H).

| MSB (Note 1) | Stream Address (St0 - 31) | | | | | | Channel Address (Ch0 - 255) | | | | | | | | |
|---|---|---|---|---|---|---|---|---|---|---|---|---|---|---|---|
| **A13** | **A12** | **A11** | **A10** | **A9** | **A8** | **Stream [n]** | **A7** | **A6** | **A5** | **A4** | **A3** | **A2** | **A1** | **A0** | **Channel [n]** |
| 1 | 0 | 0 | 0 | 0 | 0 | Stream 0 | 0 | 0 | 0 | 0 | 0 | 0 | 0 | 0 | Ch 0 |
| 1 | 0 | 0 | 0 | 0 | 1 | Stream 1 | 0 | 0 | 0 | 0 | 0 | 0 | 0 | 1 | Ch 1 |
| 1 | 0 | 0 | 0 | 1 | 0 | Stream 2 | . | . | . | . | . | . | . | . | . |
| 1 | 0 | 0 | 0 | 1 | 1 | Stream 3 | . | . | . | . | . | . | . | . | . |
| 1 | 0 | 0 | 1 | 0 | 0 | Stream 4 | 0 | 0 | 0 | 1 | 1 | 1 | 1 | 0 | Ch 30 |
| 1 | 0 | 0 | 1 | 0 | 1 | Stream 5 | 0 | 0 | 0 | 1 | 1 | 1 | 1 | 1 | Ch 31 (Note 2) |
| 1 | 0 | 0 | 1 | 1 | 0 | Stream 6 | 0 | 0 | 1 | 0 | 0 | 0 | 0 | 0 | Ch 32 |
| 1 | 0 | 0 | 1 | 1 | 1 | Stream 7 | 0 | 0 | 1 | 0 | 0 | 0 | 0 | 1 | Ch 33 |
| 1 | 0 | 1 | 0 | 0 | 0 | Stream 8 | . | . | . | | . | . | | . | . |
| . | . | . | . | . | . | . | . | . | . | | . | | | . | . |
| . | . | . | . | . | . | . | 0 | 0 | 1 | 1 | 1 | 1 | 1 | 0 | Ch 62 |
| . | . | . | . | . | . | . | 0 | 0 | 1 | 1 | 1 | 1 | 1 | 1 | Ch 63 (Note 3) |
| . | . | . | . | . | . | . | . | . | . | . | . | . | . | . | . |
| . | . | . | . | . | . | . | . | . | . | . | . | . | . | . | . |
| 1 | 0 | 1 | 1 | 1 | 0 | Stream 14 | . | . | . | . | . | . | . | . | . |
| 1 | 0 | 1 | 1 | 1 | 1 | Stream 15 | . | . | . | . | . | . | . | . | . |
| . | . | . | . | . | | . | 0 | 1 | 1 | 1 | 1 | 1 | 1 | 0 | Ch126 |
| . | . | . | . | . | | . | 0 | 1 | 1 | 1 | 1 | 1 | 1 | 1 | Ch 127 (Note 4) |
| . | . | . | . | . | | . | . | . | . | . | . | . | . | . | . |
| . | . | . | . | . | | . | . | . | . | . | . | . | . | . | . |
| 1 | 1 | 1 | 1 | 1 | | Stream 30 | . | . | . | . | . | . | . | . | . |
| 1 | 1 | 1 | 1 | 1 | | Stream 31 | . | . | . | . | . | . | . | . | . |
| | | | | | | | 1 | 1 | 1 | 1 | 1 | 1 | 1 | 0 | Ch 254 |
| | | | | | | | 1 | 1 | 1 | 1 | 1 | 1 | 1 | 1 | Ch 255 (Note 5) |

Notes:
1. A13 must be high for access to data and connection memory positions. A13 must be low to access internal registers.
2. Channels 0 to 31 are used when serial stream is at 2.048 Mbps.
3. Channels 0 to 63 are used when serial stream is at 4.096 Mbps.
4. Channels 0 to 127 are used when serial stream is at 8.192 Mbps.
5. Channels 0 to 255 are used when serial stream is at 16.384 Mbps.

**Table 31 - Address Map for Memory Locations (A13 = 1)**

## 20.2 Connection Memory Low (CM_L) Bit Assignment

When the CMM bit (bit 0) in the connection memory low is zero, the per-channel transmission is set to the normal channel-switching. The connection memory low bit assignment for the channel transmission mode is shown in Table 32 on page 57.

| 15 | 14 | 13 | 12 | 11 | 10 | 9 | 8 | 7 | 6 | 5 | 4 | 3 | 2 | 1 | 0 |
|---|---|---|---|---|---|---|---|---|---|---|---|---|---|---|---|
| UA EN | V/$\overline{C}$ | SSA 4 | SSA 3 | SSA 2 | SSA 1 | SSA 0 | SCA 7 | SCA 6 | SCA 5 | SCA 4 | SCA 3 | SCA 2 | SCA 1 | SCA 0 | **CMM =0** |

| Bit | Name | Description |
|---|---|---|
| 15 | UAEN | **Conversion between μ-law and A-law Enable**<br>When this bit is low, normal switch without μ-law/A-law conversion. Connection memory high will be ignored.<br>When this bit is high, switch with μ-law/A-law conversion, and connection memory high controls the conversion method. |

**Table 32 - Connection Memory Low (CM_L) Bit Assignment when CMM = 0**

| 15 | 14 | 13 | 12 | 11 | 10 | 9 | 8 | 7 | 6 | 5 | 4 | 3 | 2 | 1 | 0 |
|---|---|---|---|---|---|---|---|---|---|---|---|---|---|---|---|
| UA EN | V/$\overline{C}$ | SSA 4 | SSA 3 | SSA 2 | SSA 1 | SSA 0 | SCA 7 | SCA 6 | SCA 5 | SCA 4 | SCA 3 | SCA 2 | SCA 1 | SCA 0 | **CMM =0** |

| Bit | Name | Description |
|---|---|---|
| 14 | V/$\overline{C}$ | **Variable/Constant Delay Control**<br>When this bit is low, the output data for this channel will be taken from constant delay memory.<br>When this bit is set to high, the output data for this channel will be taken from variable delay memory. Note that VAREN must be set in Control Register first. |
| 13 - 9 | SSA4 - 0 | **Source Stream Address**<br>The binary value of these 5 bits represents the input stream number. |
| 8 - 1 | SCA7 - 0 | **Source Channel Address**<br>The binary value of these 8 bits represents the input channel number. |
| 0 | CMM = 0 | **Connection Memory Mode = 0**<br>If this is low, the connection memory is in the normal switching mode. Bit13 - 1 are the source stream number and channel number. |
| Note: For proper μ-law/A-law conversion, the CM_H bits should be set before Bit 15 (UAEN bit) is set to high. | | |

**Table 32 - Connection Memory Low (CM_L) Bit Assignment when CMM = 0**

When CMM is one, the device is programmed to perform one of the special per-channel transmission modes. Bits PCC0 and PCC1 from connection memory are used to select the per-channel tristate, message or BER test mode as shown in Table 33 on page 58.

| 15 | 14 | 13 | 12 | 11 | 10 | 9 | 8 | 7 | 6 | 5 | 4 | 3 | 2 | 1 | 0 |
|---|---|---|---|---|---|---|---|---|---|---|---|---|---|---|---|
| UA EN | 0 | 0 | 0 | 0 | MSG 7 | MSG 6 | MSG 5 | MSG 4 | MSG 3 | MSG 2 | MSG 1 | MSG 0 | PCC 1 | PCC 0 | **CMM =1** |

| Bit | Name | Description |
|---|---|---|
| 15 | UAEN | **Conversion between μ-law and A-law Enable (Message mode only)**<br>When this bit is low, message mode has no μ-law/A-law conversion. Connection memory high will be ignored.<br>When this bit is high, message mode has μ-law/A-law conversion, and connection memory high controls the conversion method. |
| 14 - 11 | Unused | **Reserved**<br>In normal functional mode, these bits **MUST** be set to zero. |
| 10 - 3 | MSG7 - 0 | **Message Data Bits**<br>8-bit data for the message mode. Not used in the per-channel tristate and BER test modes. |

**Table 33 - Connection Memory Low (CM_L) Bit Assignment when CMM = 1**

| 15 | 14 | 13 | 12 | 11 | 10 | 9 | 8 | 7 | 6 | 5 | 4 | 3 | 2 | 1 | 0 |
|---|---|---|---|---|---|---|---|---|---|---|---|---|---|---|---|
| UA EN | 0 | 0 | 0 | 0 | MSG 7 | MSG 6 | MSG 5 | MSG 4 | MSG 3 | MSG 2 | MSG 1 | MSG 0 | PCC 1 | PCC 0 | **CMM =1** |

| Bit | Name | Description |
|---|---|---|
| 2 - 1 | PCC1 - 0 | **Per-Channel Control Bits**<br>These two bits control the corresponding entry's value on the STio stream**.**<br><br>PCC1 / PCC0 / Channel Output Mode<br>0 / 0 / Per Channel Tristate<br>0 / 1 / Message Mode<br>1 / 0 / BER Test Mode<br>1 / 1 / Reserved |
| 0 | CMM = 1 | **Connection Memory Mode = 1**<br>If this is high, the connection memory is in the per-channel control mode which is per-channel tristate, per-channel message mode or per-channel BER mode. |

Note: For proper μ-law/A-law conversion, the CM_H bits should be set before Bit 15 (UAEN bit) is set to high.

**Table 33 - Connection Memory Low (CM_L) Bit Assignment when CMM = 1**

## 20.3 Connection Memory High (CM_H) Bit Assignment

Connection memory high provides the detailed information required for μ-law and A-law conversion. ICL and OCL bits describe the Input Coding Law and the Output Coding Law, respectively. They are used to select the expected PCM coding laws for the connection, on the TDM inputs, and on the TDM outputs. The $\overline{V}$/D bit is used to select the class of coding law. If the $\overline{V}$/D bit is cleared (to select a voice connection), the ICL and OCL bits select between A-law and μ-law specifications related to G.711 voice coding. If the $\overline{V}$/D bit is set (to select a data connection), the ICL and OCL bits select between various bit inverting protocols. These coding laws are illustrated in the following table. If the ICL is different than the OCL, all data bytes passing through the switch on that particular connection are translated between the indicated laws. If the ICL and the OCL are the same, no coding law translation is performed. The ICL, the OCL bits and $\overline{V}$/D bit only have an effect on PCM code translations for constant delay connections, variable delay connections and per-channel message mode.

| 15 | 14 | 13 | 12 | 11 | 10 | 9 | 8 | 7 | 6 | 5 | 4 | 3 | 2 | 1 | 0 |
|---|---|---|---|---|---|---|---|---|---|---|---|---|---|---|---|
| 0 | 0 | 0 | 0 | 0 | 0 | 0 | 0 | 0 | 0 | 0 | $\overline{V}$/D | ICL 1 | ICL 0 | OCL 1 | OCL 0 |

| Bit | Name | Description |
|---|---|---|
| 15 - 5 | Unused | **Reserved**<br>In normal functional mode, these bits **MUST** be set to zero. |

**Table 34 - Connection Memory High (CM_H) Bit Assignment**

| 15 | 14 | 13 | 12 | 11 | 10 | 9 | 8 | 7 | 6 | 5 | 4 | 3 | 2 | 1 | 0 |
|---|---|---|---|---|---|---|---|---|---|---|---|---|---|---|---|
| 0 | 0 | 0 | 0 | 0 | 0 | 0 | 0 | 0 | 0 | 0 | $\overline{V}$/D | ICL 1 | ICL 0 | OCL 1 | OCL 0 |

| Bit | Name | Description |
|---|---|---|
| 4 | $\overline{V}$/D | **Voice/Data Control**<br>When this bit is low, the corresponding channel is for voice.<br>When this bit is high, the corresponding channel is for data. |
| 3 - 2 | ICL1 - 0 | **Input Coding Law.** |

| ICL1-0 | Input Coding Law | |
|---|---|---|
| | For Voice ($\overline{V}$/D bit = 0) | For Data ($\overline{V}$/D bit = 1) |
| 00 | CCITT.ITU A-law | No code |
| 01 | CCITT.ITU μ-law | ABI |
| 10 | A-law w/o ABI | Inverted ABI |
| 11 | μ-law w/o Magnitude Inversion | All Bits Inverted |

| | | |
|---|---|---|
| 1 - 0 | OCL1 - 0 | **Output Coding Law** |

| OCL1-0 | Output Coding Law | |
|---|---|---|
| | For Voice ($\overline{V}$/D bit = 0) | For Data ($\overline{V}$/D bit = 1) |
| 00 | CCITT.ITU A-law | No code |
| 01 | CCITT.ITU μ-law | ABI |
| 10 | A-law w/o ABI | Inverted ABI |
| 11 | μ-law w/o Magnitude Inversion | All Bits Inverted |

Note 1: For proper μ-law/A-law conversion, the CM_H bits should be set before Bit 15 of CM_L is set to high.

Note 2: Refer to G.711 standard for detail information of different laws.

**Table 34 - Connection Memory High (CM_H) Bit Assignment**

## 21.0 DC Parameters

**Absolute Maximum Ratings***

| | Parameter | Symbol | Min. | Max. | Units |
|---|---|---|---|---|---|
| 1 | I/O Supply Voltage | $V_{DD_IO}$ | -0.5 | 5.0 | V |
| 2 | Core Supply Voltage | $V_{DD_CORE}$ | -0.5 | 2.5 | V |
| 3 | Input Voltage | $V_{I_3V}$ | -0.5 | $V_{DD}$ + 0.5 | V |
| 4 | Input Voltage (5 V-tolerant inputs) | $V_{I_5V}$ | -0.5 | 7.0 | V |
| 5 | Continuous Current at Digital Outputs | $I_o$ | | 15 | mA |
| 6 | Package Power Dissipation | $P_D$ | | 1.5 | W |
| 7 | Storage Temperature | $T_S$ | - 55 | +125 | °C |

* Exceeding these values may cause permanent damage. Functional operation under these conditions is not implied.

**Recommended Operating Conditions -** Voltages are with respect to ground ($V_{SS}$) unless otherwise stated.

| | Characteristics | Sym. | Min. | Typ.‡ | Max. | Units |
|---|---|---|---|---|---|---|
| 1 | Operating Temperature | $T_{OP}$ | -40 | 25 | +85 | °C |
| 2 | Positive Supply | $V_{DD_IO}$ | 3.0 | 3.3 | 3.6 | V |
| 3 | Positive Supply | $V_{DD_CORE}$ | 1.71 | 1.8 | 1.89 | V |
| 4 | Input Voltage | $V_I$ | 0 | 3.3 | $V_{DD_IO}$ | V |
| 5 | Input Voltage on 5 V-Tolerant Inputs | $V_{I_5V}$ | 0 | 5.0 | 5.5 | V |

‡ Typical figures are at 25°C and are for design aid only: not guaranteed and not subject to production testing.

**DC Electrical Characteristics† -** Voltages are with respect to ground ($V_{SS}$) unless otherwise stated.

| | Characteristics | Sym. | Min. | Typ.‡ | Max. | Units | Test Conditions |
|---|---|---|---|---|---|---|---|
| 1 | Supply Current - $V_{DD_CORE}$ | $I_{DD_CORE}$ | | | 120 | mA | |
| 2 | Supply Current - $V_{DD_IO}$ | $I_{DD_IO}$ | | | 70 | mA | $C_L$=30pF |
| 3 | Input High Voltage | $V_{IH}$ | 2.0 | | | V | |
| 4 | Input Low Voltage | $V_{IL}$ | | | 0.8 | V | |
| 5 | Input Leakage (input pins)<br>Input Leakage (bi-directional pins) | $I_{IL}$<br>$I_{BL}$ | | | 5<br>5 | µA<br>µA | $0 \le < V_{IN} \le V_{DD_IO}$<br>See Note 1 |
| 6 | Weak Pullup Current | $I_{PU}$ | | -33 | | µA | Input at 0V |
| 7 | Weak Pulldown Current | $I_{PD}$ | | 33 | | µA | Input at $V_{DD_IO}$ |
| 8 | Input Pin Capacitance | $C_I$ | | 3 | | pF | |
| 9 | Output High Voltage | $V_{OH}$ | 2.4 | | | V | $I_{OH}$ = 8 mA |
| 10 | Output Low Voltage | $V_{OL}$ | | | 0.4 | V | $I_{OL}$ = 8 mA |
| 11 | Output High Impedance Leakage | $I_{OZ}$ | | | 5 | µA | $0 < V < V_{DD}$ |
| 12 | Output Pin Capacitance | $C_O$ | | 5 | 10 | pF | |

† Characteristics are over recommended operating conditions unless otherwise stated.

‡ Typical figures are at 25°C, VDD_CORE at 1.8 V and VDD_IO at 3.3 V and are for design aid only: not guaranteed and not subject to production testing.

Note 1: Maximum leakage on pins (output or I/O pins in high impedance state) is over an applied voltage ($V_{IN}$).

## 22.0 AC Parameters

**AC Electrical Characteristics† - Timing Parameter Measurement Voltage Levels**

| | Characteristics | Sym. | Level | Units | Conditions |
|---|---|---|---|---|---|
| 1 | CMOS Threshold | $V_{CT}$ | 0.5 $V_{DD_IO}$ | V | |
| 2 | Rise/Fall Threshold Voltage High | $V_{HM}$ | 0.7 $V_{DD_IO}$ | V | |
| 3 | Rise/Fall Threshold Voltage Low | $V_{LM}$ | 0.3 $V_{DD_IO}$ | V | |

† Characteristics are over recommended operating conditions unless otherwise stated.

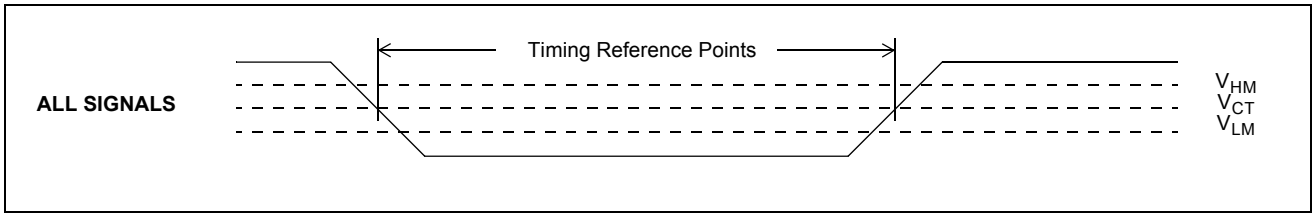


**Figure 19 - Timing Parameter Measurement Voltage Levels**

**AC Electrical Characteristics† - Motorola Non-Multiplexed Bus Mode - Read Access**

| | Characteristics | Sym. | Min. | Typ.‡ | Max. | Units | Test Conditions[2] |
|---|---|---|---|---|---|---|---|
| 1 | $\overline{CS}$ de-asserted time | $t_{CSD}$ | 15 | | | ns | |
| 2 | $\overline{DS}$ de-asserted time | $t_{DSD}$ | 15 | | | ns | |
| 3 | $\overline{CS}$ setup to $\overline{DS}$ falling | $t_{CSS}$ | 0 | | | ns | |
| 4 | R/$\overline{W}$ setup to $\overline{DS}$ falling | $t_{RWS}$ | 10 | | | ns | |
| 5 | Address setup to $\overline{DS}$ falling | $t_{AS}$ | 5 | | | ns | |
| 6 | $\overline{CS}$ hold after $\overline{DS}$ rising | $t_{CSH}$ | 0 | | | ns | |
| 7 | R/$\overline{W}$ hold after $\overline{DS}$ rising | $t_{RWH}$ | 0 | | | ns | |
| 8 | Address hold after $\overline{DS}$ rising | $t_{AH}$ | 0 | | | ns | |
| 9 | Data setup to $\overline{DTA}$ Low | $t_{DS}$ | 8 | | | ns | $C_L$ = 50 pF |
| 10 | Data hold after $\overline{DS}$ rising | $t_{DHZ}$ | 7 | | | ns | $C_L$ = 50 pF, $R_L$ = 1 K (Note 1) |
| 11 | Acknowledgement delay time. From $\overline{DS}$ low to $\overline{DTA}$ low:<br>Registers<br>Memory | $t_{AKD}$ | | | <br><br>75<br>185 | <br><br>ns<br>ns | <br><br>$C_L$ = 50 pF<br>$C_L$ = 50 pF |
| 12 | Acknowledgement hold time. From $\overline{DS}$ high to $\overline{DTA}$ high | $t_{AKH}$ | 4 | | 12 | ns | $C_L$ = 50 pF, $R_L$ = 1 K (Note 1) |
| 13 | $\overline{DTA}$ drive high to HiZ | $t_{AKZ}$ | | | 8 | ns | |

Note 1: High impedance is measured by pulling to the appropriate rail with $R_L$, with timing corrected to cancel time taken to discharge $C_L$.

Note 2: A delay of 500 µs to 2 ms (see Section 13.2 on page 33) must be applied before the first microprocessor access is performed after the $\overline{RESET}$ pin is set high.

† Characteristics are over recommended operating conditions unless otherwise stated.

‡ Typical figures are at 25°C, VDD_CORE at 1.8 V and VDD_IO at 3.3 V and are for design aid only: not guaranteed and not subject to production testing.

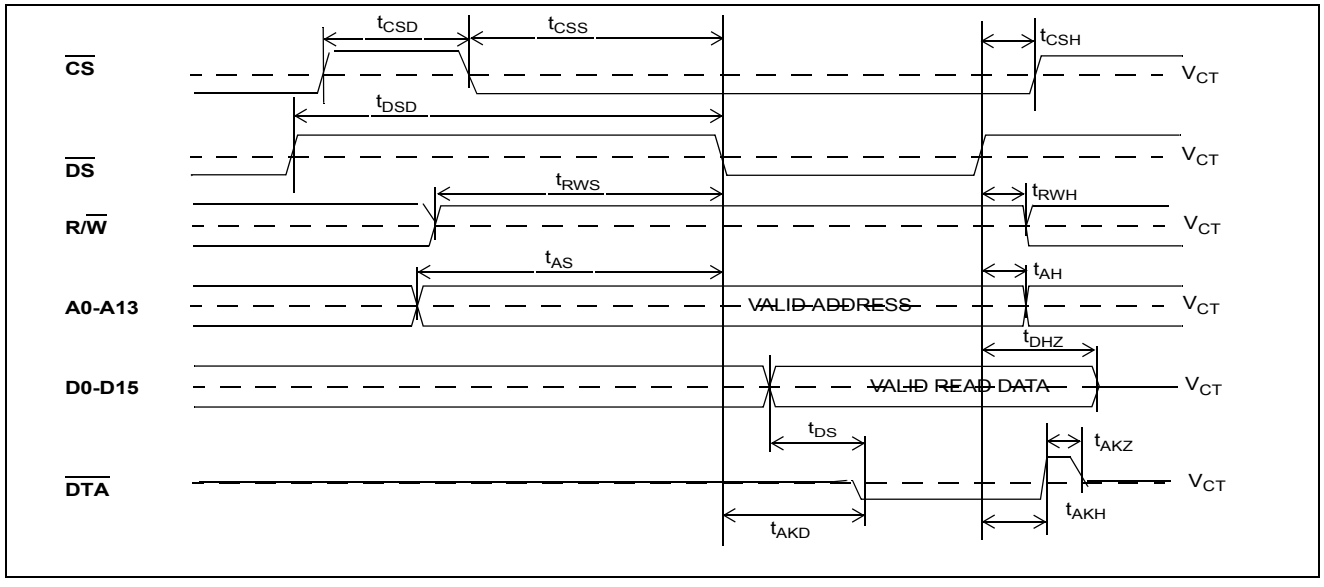


**Figure 20 - Motorola Non-Multiplexed Bus Timing - Read Access**

**AC Electrical Characteristics† - Motorola Non-Multiplexed Bus Mode - Write Access**

| | Characteristics | Sym. | Min. | Typ.‡ | Max. | Units | Test Conditions[2] |
|---|---|---|---|---|---|---|---|
| 1 | $\overline{CS}$ de-asserted time | $t_{CSD}$ | 15 | | | ns | |
| 2 | $\overline{DS}$ de-asserted time | $t_{DSD}$ | 15 | | | ns | |
| 3 | $\overline{CS}$ setup to $\overline{DS}$ falling | $t_{CSS}$ | 0 | | | ns | |
| 4 | R/$\overline{W}$ setup to $\overline{DS}$ falling | $t_{RWS}$ | 10 | | | ns | |
| 5 | Address setup to $\overline{DS}$ falling | $t_{AS}$ | 5 | | | ns | |
| 6 | Data setup to $\overline{DS}$ falling | $t_{DS}$ | 0 | | | ns | $C_L$ = 50 pF |
| 7 | $\overline{CS}$ hold after $\overline{DS}$ rising | $t_{CSH}$ | 0 | | | ns | |
| 8 | R/$\overline{W}$ hold after $\overline{DS}$ rising | $t_{RWH}$ | 0 | | | ns | |
| 9 | Address hold after $\overline{DS}$ rising | $t_{AH}$ | 0 | | | ns | |
| 10 | Data hold from $\overline{DS}$ rising | $t_{DH}$ | 5 | | | ns | $C_L$ = 50 pF, $R_L$ = 1 K (Note 1) |
| 11 | Acknowledgement delay time. From $\overline{DS}$ low to $\overline{DTA}$ low:<br>Registers<br>Memory | $t_{AKD}$ | | | <br><br>55<br>150 | <br><br>ns<br>ns | <br><br>$C_L$ = 50 pF<br>$C_L$ = 50 pF |
| 12 | Acknowledgement hold time. From $\overline{DS}$ high to $\overline{DTA}$ high | $t_{AKH}$ | 4 | | 12 | ns | $C_L$ = 50 pF, $R_L$ = 1 K (Note 1) |
| 13 | $\overline{DTA}$ drive high to HiZ | $t_{AKZ}$ | | | 8 | ns | |

Note 1: High impedance is measured by pulling to the appropriate rail with $R_L$, with timing corrected to cancel time taken to discharge $C_L$.

Note 2: A delay of 500 µs to 2 ms (see Section 13.2 on page 33) must be applied before the first microprocessor access is performed after the $\overline{RESET}$ pin is set high.

† Characteristics are over recommended operating conditions unless otherwise stated.

‡ Typical figures are at 25°C, VDD_CORE at 1.8 V and VDD_IO at 3.3 V and are for design aid only: not guaranteed and not subject to production testing.

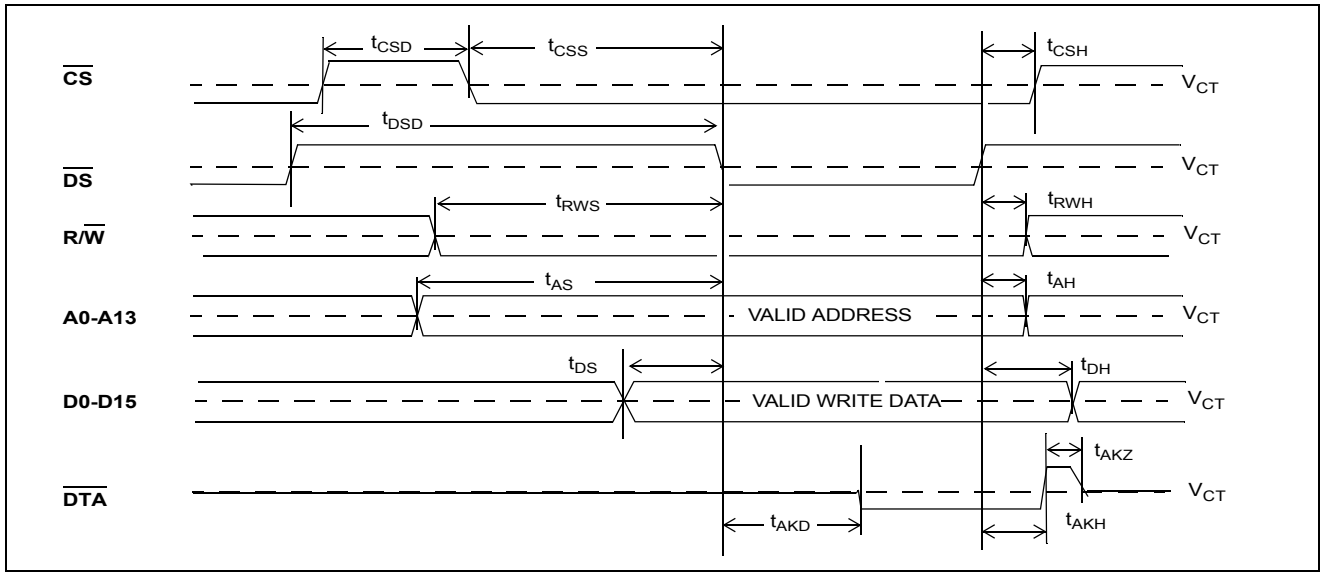


**Figure 21 - Motorola Non-Multiplexed Bus Timing - Write Access**

**AC Electrical Characteristics† - Intel Non-Multiplexed Bus Mode - Read Access**

| | Characteristics | Sym. | Min. | Typ.‡ | Max. | Units | Test Conditions[2] |
|---|---|---|---|---|---|---|---|
| 1 | $\overline{CS}$ de-asserted time | $t_{CSD}$ | 15 | | | ns | |
| 2 | $\overline{RD}$ setup to $\overline{CS}$ falling | $t_{RS}$ | 10 | | | ns | |
| 3 | $\overline{WR}$ setup to $\overline{CS}$ falling | $t_{WS}$ | 10 | | | ns | |
| 4 | Address setup to $\overline{CS}$ falling | $t_{AS}$ | 5 | | | ns | |
| 5 | $\overline{RD}$ hold after $\overline{CS}$ rising | $t_{RH}$ | 0 | | | ns | |
| 6 | $\overline{WR}$ hold after $\overline{CS}$ rising | $t_{WH}$ | 0 | | | ns | |
| 7 | Address hold after $\overline{CS}$ rising | $t_{AH}$ | 0 | | | ns | |
| 8 | Data setup to RDY high | $t_{DS}$ | 8 | | | ns | $C_L$ = 50 pF |
| 9 | Data hold after $\overline{CS}$ rising | $t_{CSZ}$ | 7 | | | ns | $C_L$ = 50 pF, $R_L$ = 1 K (Note 1) |
| 10 | Acknowledgement delay time. From $\overline{CS}$ low to RDY high:<br>Registers<br>Memory | $t_{AKD}$ | | | <br><br>175<br>185 | <br><br>ns<br>ns | <br><br>$C_L$ = 50 pF<br>$C_L$ = 50 pF |
| 11 | Acknowledgement hold time. From $\overline{CS}$ high to RDY low | $t_{AKH}$ | 4 | | 12 | ns | $C_L$ = 50 pF, $R_L$ = 1 K (Note 1) |
| 12 | RDY drive low to HiZ | $t_{AKZ}$ | | | 8 | ns | |

Note 1: High impedance is measured by pulling to the appropriate rail with $R_L$, with timing corrected to cancel time taken to discharge $C_L$.

Note 2: A delay of 500 µs to 2 ms (see Section 13.2 on page 33) must be applied before the first microprocessor access is performed after the $\overline{RESET}$ pin is set high.

† Characteristics are over recommended operating conditions unless otherwise stated.

‡ Typical figures are at 25°C, VDD_CORE at 1.8 V and VDD_IO at 3.3 V and are for design aid only: not guaranteed and not subject to production testing.

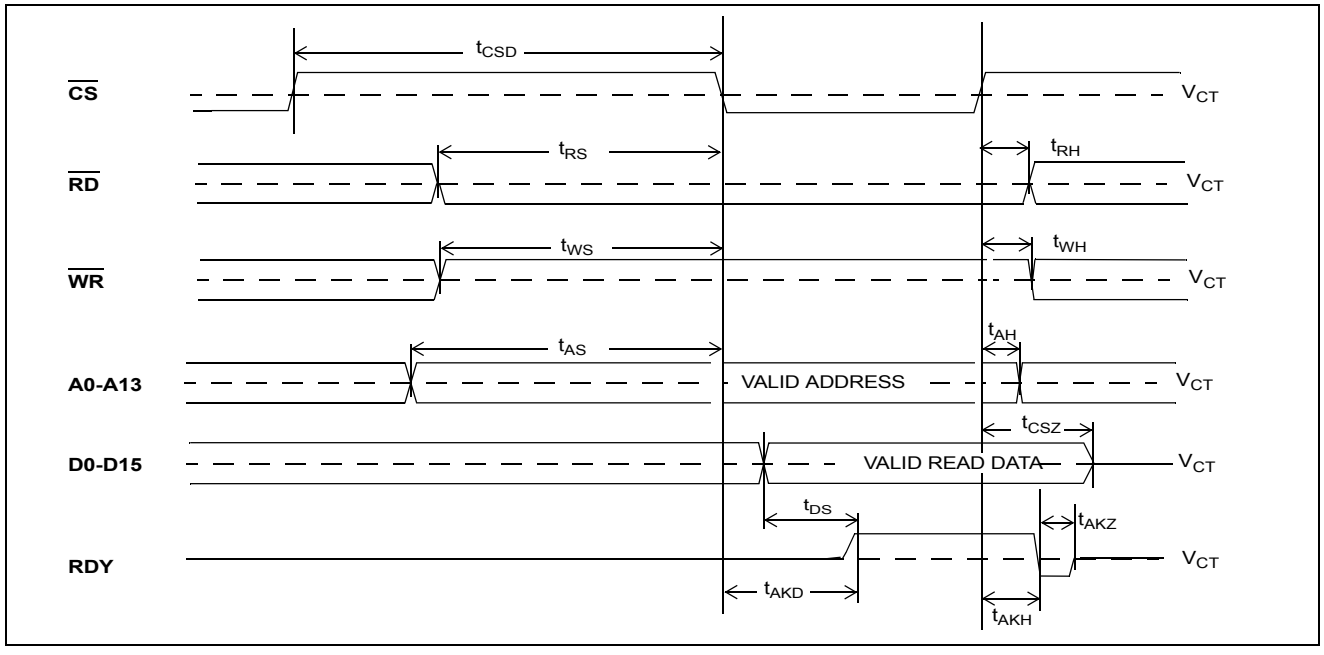


**Figure 22 - Intel Non-Multiplexed Bus Timing - Read Access**

**AC Electrical Characteristics† - Intel Non-Multiplexed Bus Mode - Write Access**

| | Characteristics | Sym. | Min. | Typ.‡ | Max. | Units | Test Conditions[2] |
|---|---|---|---|---|---|---|---|
| 1 | $\overline{CS}$ de-asserted time | $t_{CSD}$ | 15 | | | ns | |
| 2 | $\overline{WR}$ setup to $\overline{CS}$ falling | $t_{WS}$ | 10 | | | ns | |
| 3 | $\overline{RD}$ setup to $\overline{CS}$ falling | $t_{RS}$ | 10 | | | ns | |
| 4 | Address setup to $\overline{CS}$ falling | $t_{AS}$ | 5 | | | ns | |
| 5 | Data setup to $\overline{CS}$ falling | $t_{DS}$ | 0 | | | ns | $C_L$ = 50 pF |
| 6 | $\overline{WR}$ hold after $\overline{CS}$ rising | $t_{WH}$ | 0 | | | ns | |
| 7 | $\overline{RD}$ hold after $\overline{CS}$ rising | $t_{RH}$ | 0 | | | ns | |
| 8 | Address hold after $\overline{CS}$ rising | $t_{AH}$ | 10 | | | ns | |
| 9 | Data hold after $\overline{CS}$ rising | $t_{DH}$ | 5 | | | ns | $C_L$ = 50 pF, $R_L$ = 1 K (Note 1) |
| 10 | Acknowledgement delay time. From $\overline{CS}$ low to RDY high:<br>Registers<br>Memory | $t_{AKD}$ | | | <br><br>55<br>150 | <br><br>ns<br>ns | <br><br>$C_L$ = 50 pF<br>$C_L$ = 50 pF |
| 11 | Acknowledgement hold time. From $\overline{CS}$ high to RDY low | $t_{AKH}$ | 4 | | 12 | ns | $C_L$ = 50 pF, $R_L$ = 1 K (Note 1) |
| 12 | RDY drive low to HiZ | $t_{AKZ}$ | | | 8 | ns | |

Note 1: High impedance is measured by pulling to the appropriate rail with $R_L$, with timing corrected to cancel time taken to discharge $C_L$.

Note 2: A delay of 500 µs to 2 ms (Section 13.2 on page 33) must be applied before the first microprocessor access is performed after the $\overline{RESET}$ pin is set high.

† Characteristics are over recommended operating conditions unless otherwise stated.

‡ Typical figures are at 25°C, VDD_CORE at 1.8 V and VDD_IO at 3.3 V and are for design aid only: not guaranteed and not subject to production testing.

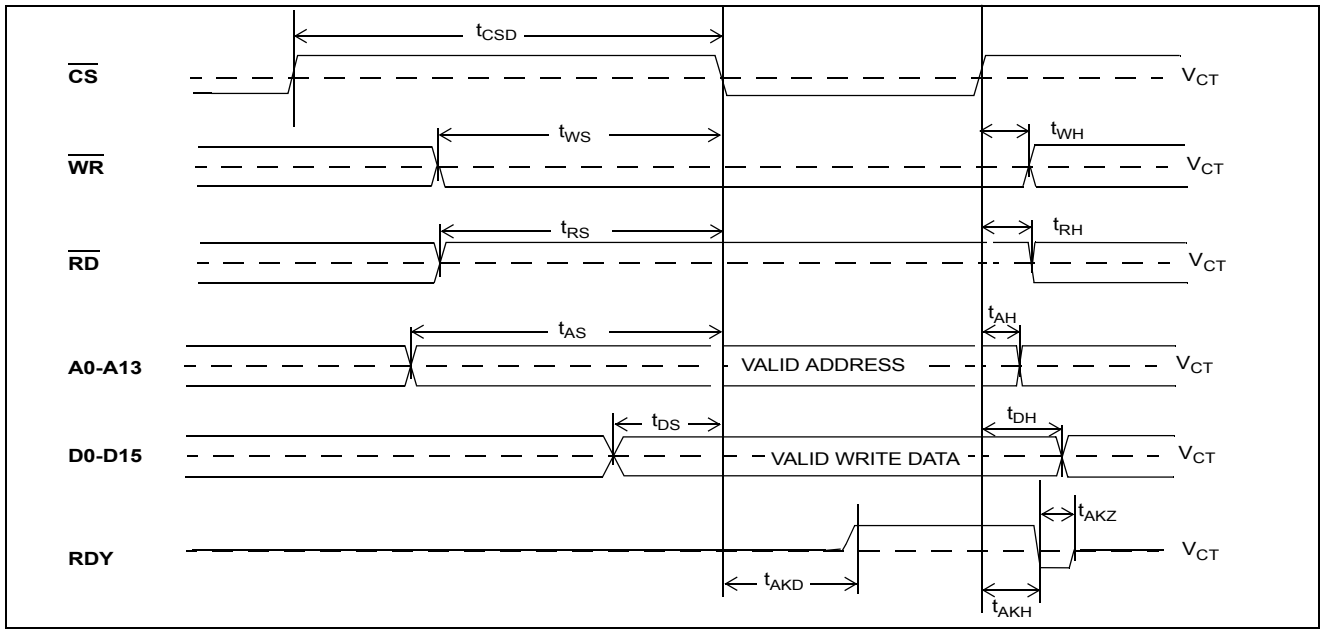


**Figure 23 - Intel Non-Multiplexed Bus Timing - Write Access**

**AC Electrical Characteristics† - JTAG Test Port Timing**

| | Characteristic | Sym. | Min. | Typ.‡ | Max. | Units | Notes |
|---|---|---|---|---|---|---|---|
| 1 | TCK Clock Period | $t_{TCKP}$ | 100 | | | ns | |
| 2 | TCK Clock Pulse Width High | $t_{TCKH}$ | 20 | | | ns | |
| 3 | TCK Clock Pulse Width Low | $t_{TCKL}$ | 20 | | | ns | |
| 4 | TMS Set-up Time | $t_{TMSS}$ | 10 | | | ns | |
| 5 | TMS Hold Time | $t_{TMSH}$ | 10 | | | ns | |
| 6 | TDi Input Set-up Time | $t_{TDIS}$ | 20 | | | ns | |
| 7 | TDi Input Hold Time | $t_{TDIH}$ | 60 | | | ns | |
| 8 | TDo Output Delay | $t_{TDOD}$ | | | 30 | ns | $C_L$ = 30 pF |
| 9 | $\overline{TRST}$ pulse width | $t_{TRSTW}$ | 200 | | | ns | |

† Characteristics are over recommended operating conditions unless otherwise stated.

‡ Typical figures are at 25°C, VDD_CORE at 1.8 V and VDD_IO at 3.3 V and are for design aid only: not guaranteed and not subject to production testing.

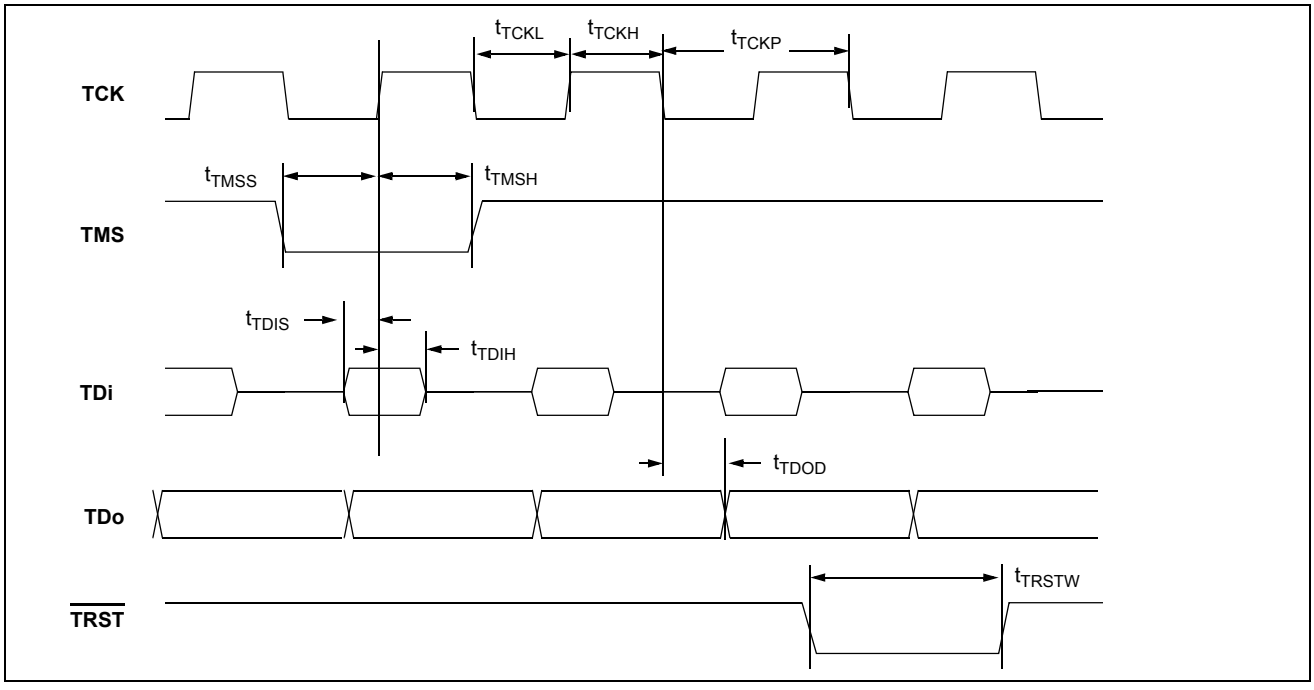


**Figure 24 - JTAG Test Port Timing Diagram**

**AC Electrical Characteristics† - FPi and CKi Timing when CKIN1-0 bits = 00 (16.384 MHz)**

| | Characteristic | Sym. | Min. | Typ.‡ | Max. | Units | Notes |
|---|---|---|---|---|---|---|---|
| 1 | FPi Input Frame Pulse Width | $t_{FPIW}$ | 40 | 61 | 115 | ns | |
| 2 | FPi Input Frame Pulse Setup Time | $t_{FPIS}$ | 20 | | | ns | |
| 3 | FPi Input Frame Pulse Hold Time | $t_{FPIH}$ | 20 | | | ns | |
| 4 | CKi Input Clock Period | $t_{CKIP}$ | 55 | 61 | 67 | ns | |
| 5 | CKi Input Clock High Time | $t_{CKIH}$ | 27 | | 34 | ns | |
| 6 | CKi Input Clock Low Time | $t_{CKIL}$ | 27 | | 34 | ns | |
| 7 | CKi Input Clock Rise/Fall Time | $t_r$CKi, $t_f$CKi | | | 3 | ns | |
| 8 | CKi Input Clock Cycle to Cycle Variation | $t_{CVC}$ | 0 | | 20 | ns | |

† Characteristics are over recommended operating conditions unless otherwise stated.

‡ Typical figures are at 25°C, VDD_CORE at 1.8 V and VDD_IO at 3.3 V and are for design aid only: not guaranteed and not subject to production testing.

**AC Electrical Characteristics† - FPi and CKi Timing when CKIN1-0 bits = 01 (8.192 MHz)**

| | Characteristic | Sym. | Min. | Typ.‡ | Max. | Units | Notes |
|---|---|---|---|---|---|---|---|
| 1 | FPi Input Frame Pulse Width | $t_{FPIW}$ | 90 | 122 | 220 | ns | |
| 2 | FPi Input Frame Pulse Setup Time | $t_{FPIS}$ | 45 | | | ns | |
| 3 | FPi Input Frame Pulse Hold Time | $t_{FPIH}$ | 45 | | | ns | |
| 4 | CKi Input Clock Period | $t_{CKIP}$ | 110 | 122 | 135 | ns | |
| 5 | CKi Input Clock High Time | $t_{CKIH}$ | 55 | | 69 | ns | |
| 6 | CKi Input Clock Low Time | $t_{CKIL}$ | 55 | | 69 | ns | |
| 7 | CKi Input Clock Rise/Fall Time | $t_r$CKi, $t_f$CKi | | | 3 | ns | |
| 8 | CKi Input Clock Cycle to Cycle Variation | $t_{CVC}$ | 0 | | 20 | ns | |

† Characteristics are over recommended operating conditions unless otherwise stated.

‡ Typical figures are at 25°C, VDD_CORE at 1.8 V and VDD_IO at 3.3 V and are for design aid only: not guaranteed and not subject to production testing.

**AC Electrical Characteristics† - FPi and CKi Timing when CKIN1-0 bits = 10 (4.096 MHz)**

| | Characteristic | Sym. | Min. | Typ.‡ | Max. | Units | Notes |
|---|---|---|---|---|---|---|---|
| 1 | FPi Input Frame Pulse Width | $t_{FPIW}$ | 90 | 244 | 420 | ns | |
| 2 | FPi Input Frame Pulse Setup Time | $t_{FPIS}$ | 110 | | | ns | |
| 3 | FPi Input Frame Pulse Hold Time | $t_{FPIH}$ | 110 | | | ns | |
| 4 | CKi Input Clock Period | $t_{CKIP}$ | 220 | 244 | 270 | ns | |
| 5 | CKi Input Clock High Time | $t_{CKIH}$ | 110 | | 135 | ns | |
| 6 | CKi Input Clock Low Time | $t_{CKIL}$ | 110 | | 135 | ns | |
| 7 | CKi Input Clock Rise/Fall Time | $t_r$CKi, $t_f$CKi | | | 3 | ns | |
| 8 | CKi Input Clock Cycle to Cycle Variation | $t_{CVC}$ | 0 | | 20 | ns | |

† Characteristics are over recommended operating conditions unless otherwise stated.

‡ Typical figures are at 25°C, VDD_CORE at 1.8 V and VDD_IO at 3.3 V and are for design aid only: not guaranteed and not subject to production testing.

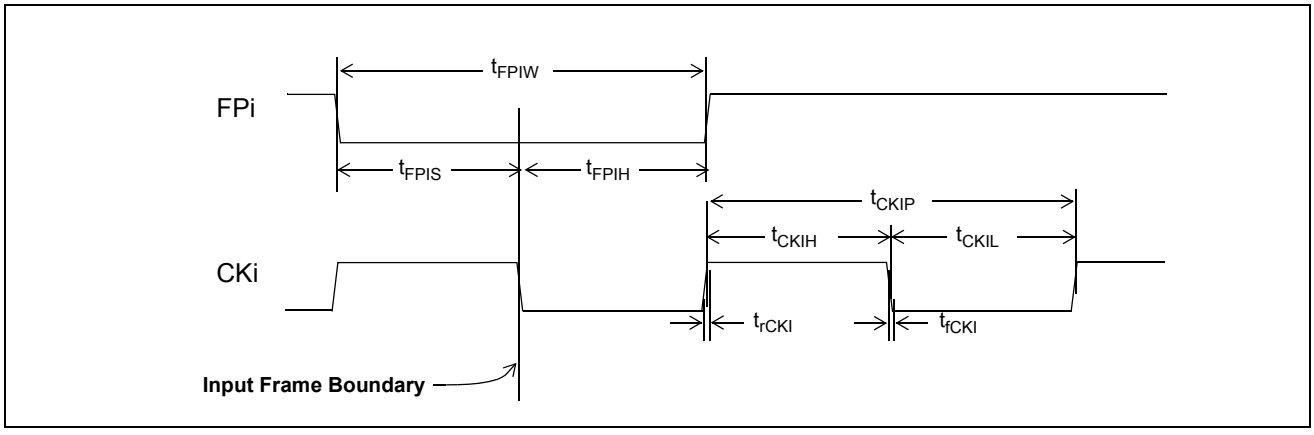


**Figure 25 - Frame Pulse Input and Clock Input Timing Diagram (ST-BUS)**

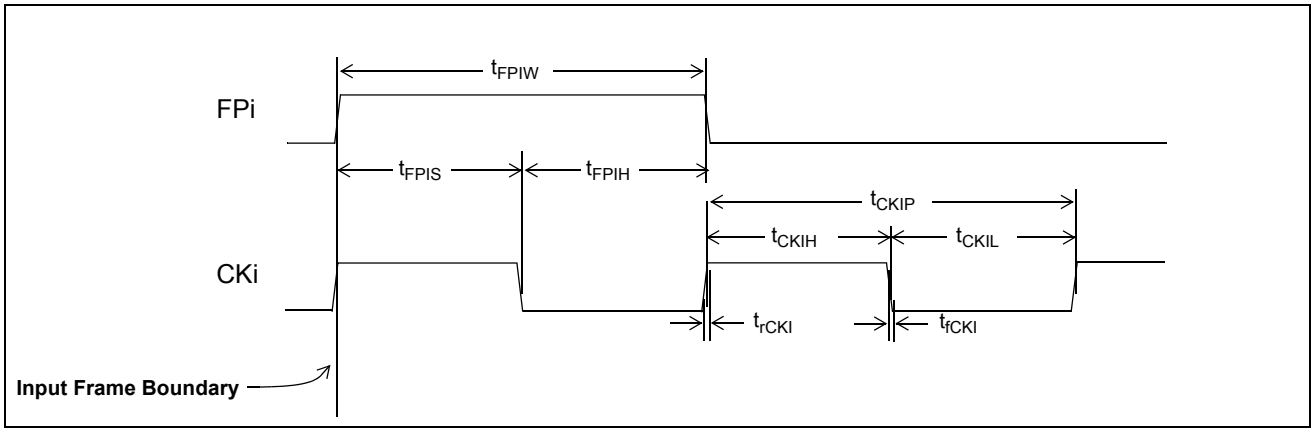


**Figure 26 - Frame Pulse Input and Clock Input Timing Diagram (GCI-Bus)**

**AC Electrical Characteristics† - ST-BUS/GCI-Bus Input Timing**

| | Characteristic | Sym. | Min. | Typ.‡ | Max. | Units | Test Conditions |
|---|---|---|---|---|---|---|---|
| 1 | STi Setup Time | | | | | | |
| | 2.048 Mbps | $t_{SIS2}$ | 5 | | | ns | |
| | 4.096 Mbps | $t_{SIS4}$ | 5 | | | ns | |
| | 8.192 Mbps | $t_{SIS8}$ | 5 | | | ns | |
| | 16.384 Mbps | $t_{SIS16}$ | 5 | | | ns | |
| 2 | STi Hold Time | | | | | | |
| | 2.048 Mbps | $t_{SIH2}$ | 8 | | | ns | |
| | 4.096 Mbps | $t_{SIH4}$ | 8 | | | ns | |
| | 8.192 Mbps | $t_{SIH8}$ | 8 | | | ns | |
| | 16.384 Mbps | $t_{SIH16}$ | 8 | | | ns | |

† Characteristics are over recommended operating conditions unless otherwise stated.

‡ Typical figures are at 25°C, VDD_CORE at 1.8 V and VDD_IO at 3.3 V and are for design aid only: not guaranteed and not subject to production testing.

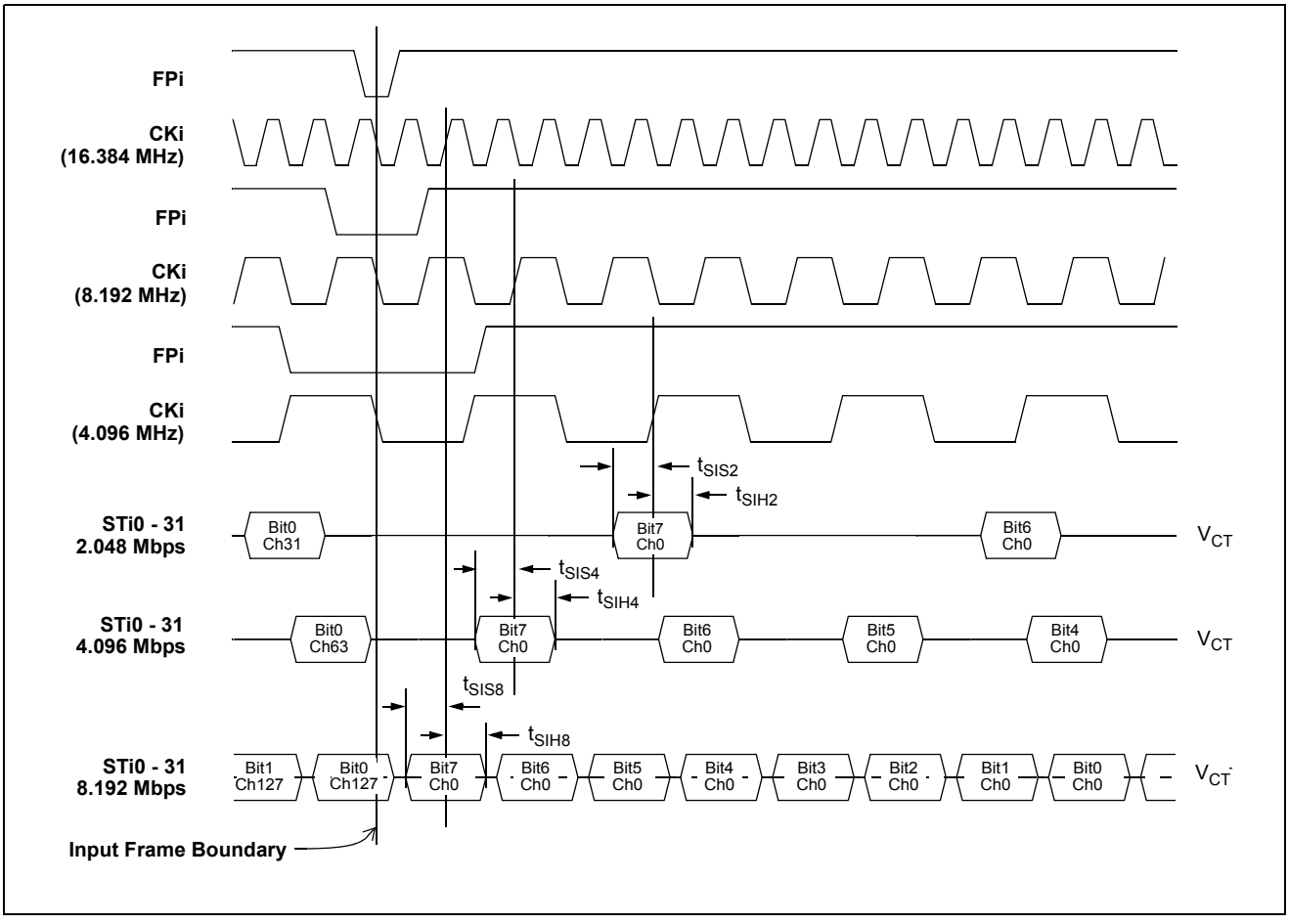


**Figure 27 - ST-BUS Input Timing Diagram when Operated at 2, 4, 8 Mbps**

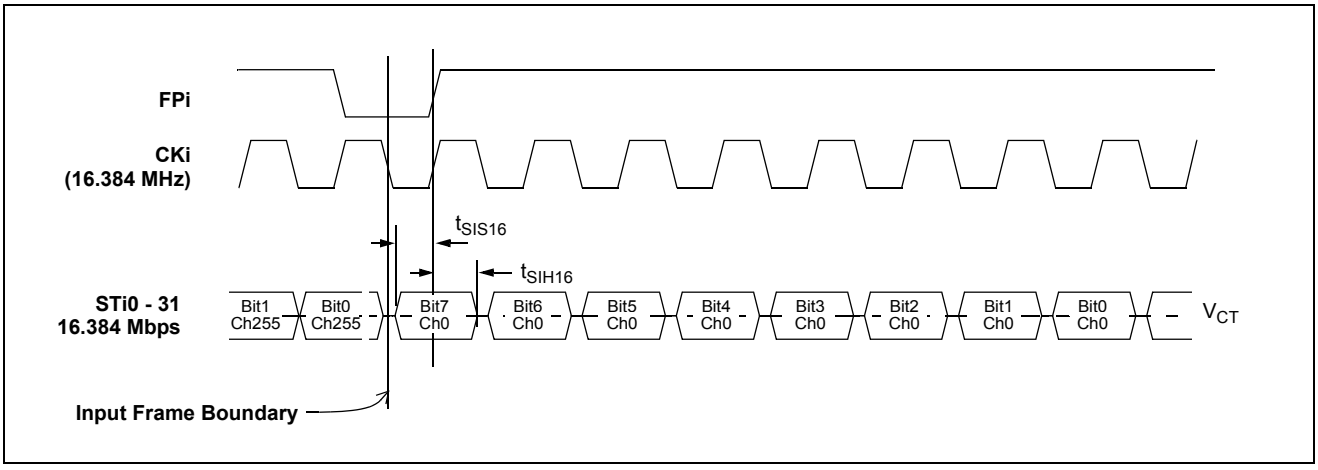


**Figure 28 - ST-BUS Input Timing Diagram when Operated at 16 Mbps**

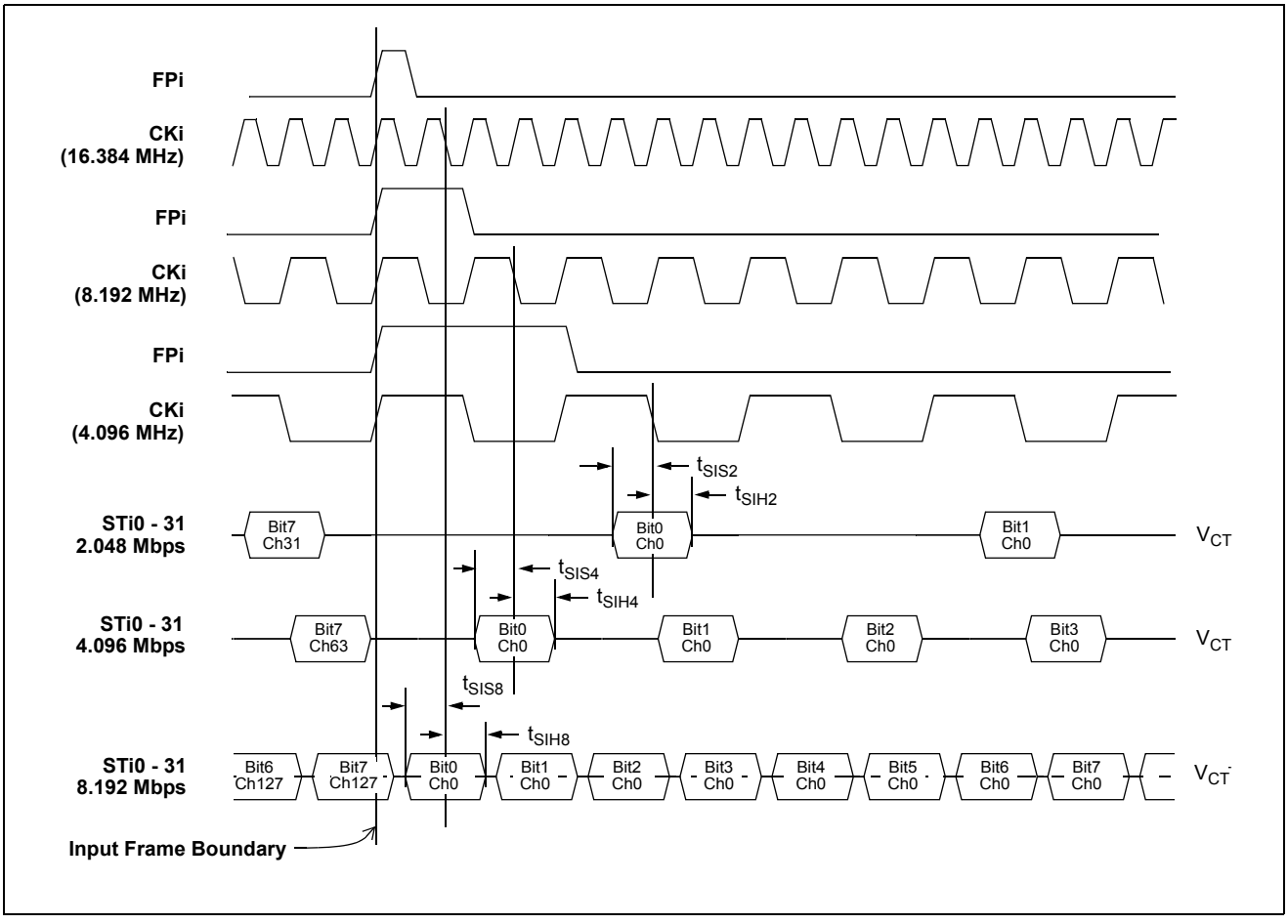


**Figure 29 - GCI-Bus Input Timing Diagram when Operated at 2, 4, 8 Mbps**

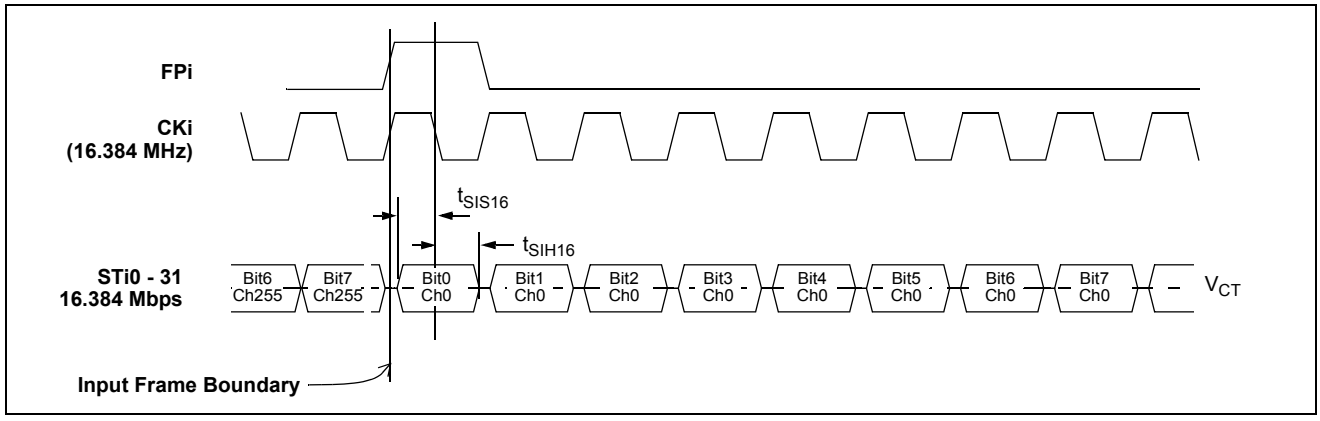


**Figure 30 - GCI-Bus Input Timing Diagram when Operated at 16 Mbps**

**AC Electrical Characteristics† - ST-BUS/GCI-Bus Output Timing**

| | Characteristic | Sym. | Min. | Typ.‡ | Max. | Units | Test Conditions |
|---|---|---|---|---|---|---|---|
| 1 | STio Delay - Active to Active | | | | | | $C_L$ = 30 pF |
| | @2.048 Mbps | $t_{SOD2}$ | 0 | | 6 | ns | Multiplied Clock Mode |
| | @4.096 Mbps | $t_{SOD4}$ | 0 | | 6 | ns | |
| | @8.192 Mbps | $t_{SOD8}$ | 0 | | 6 | ns | |
| | @16.384 Mbps | $t_{SOD16}$ | 0 | | 6 | ns | |
| | @2.048 Mbps | $t_{SOD2}$ | -6 | | 0 | ns | Divided Clock Mode |
| | @4.096 Mbps | $t_{SOD4}$ | -6 | | 0 | ns | |
| | @8.192 Mbps | $t_{SOD8}$ | -6 | | 0 | ns | |
| | @16.384 Mbps | $t_{SOD16}$ | -6 | | 0 | ns | |

† Characteristics are over recommended operating conditions unless otherwise stated.

‡ Typical figures are at 25°C, VDD_CORE at 1.8 V and VDD_IO at 3.3 V and are for design aid only: not guaranteed and not subject to production testing.

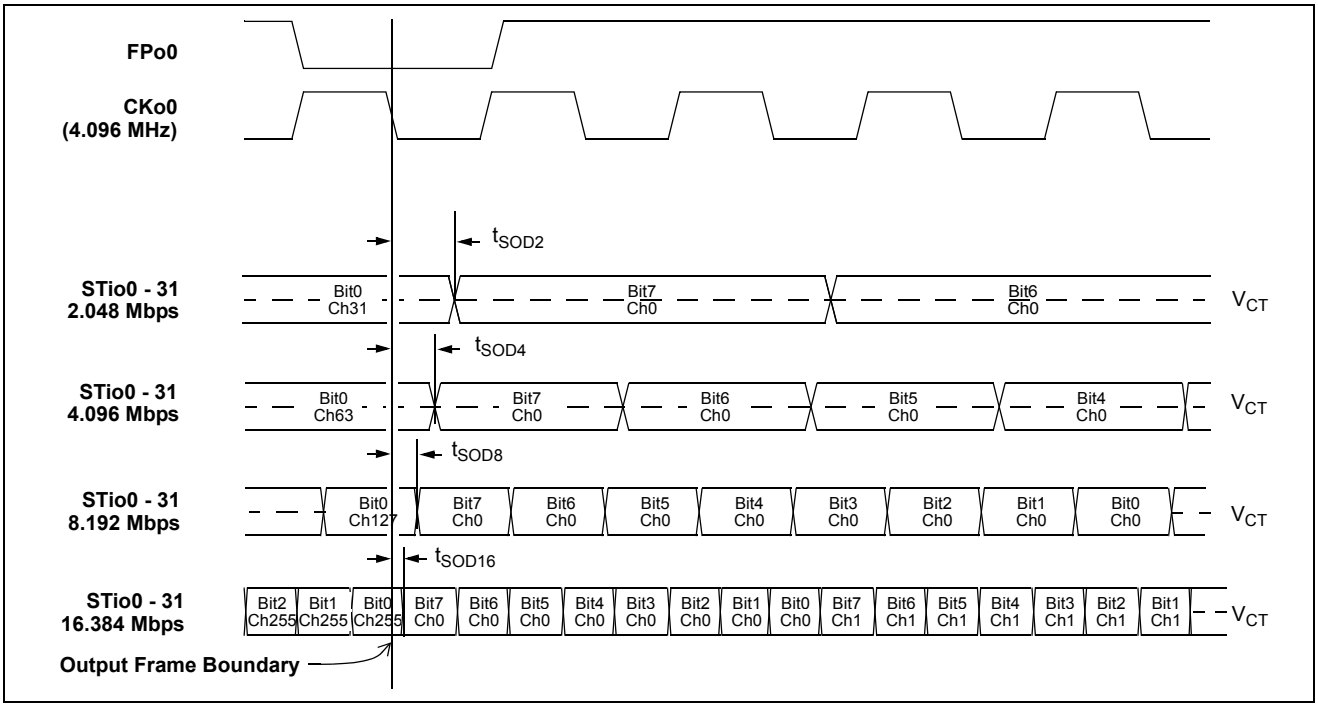


**Figure 31 - ST-BUS Output Timing Diagram when Operated at 2, 4, 8 or 16 Mbps**

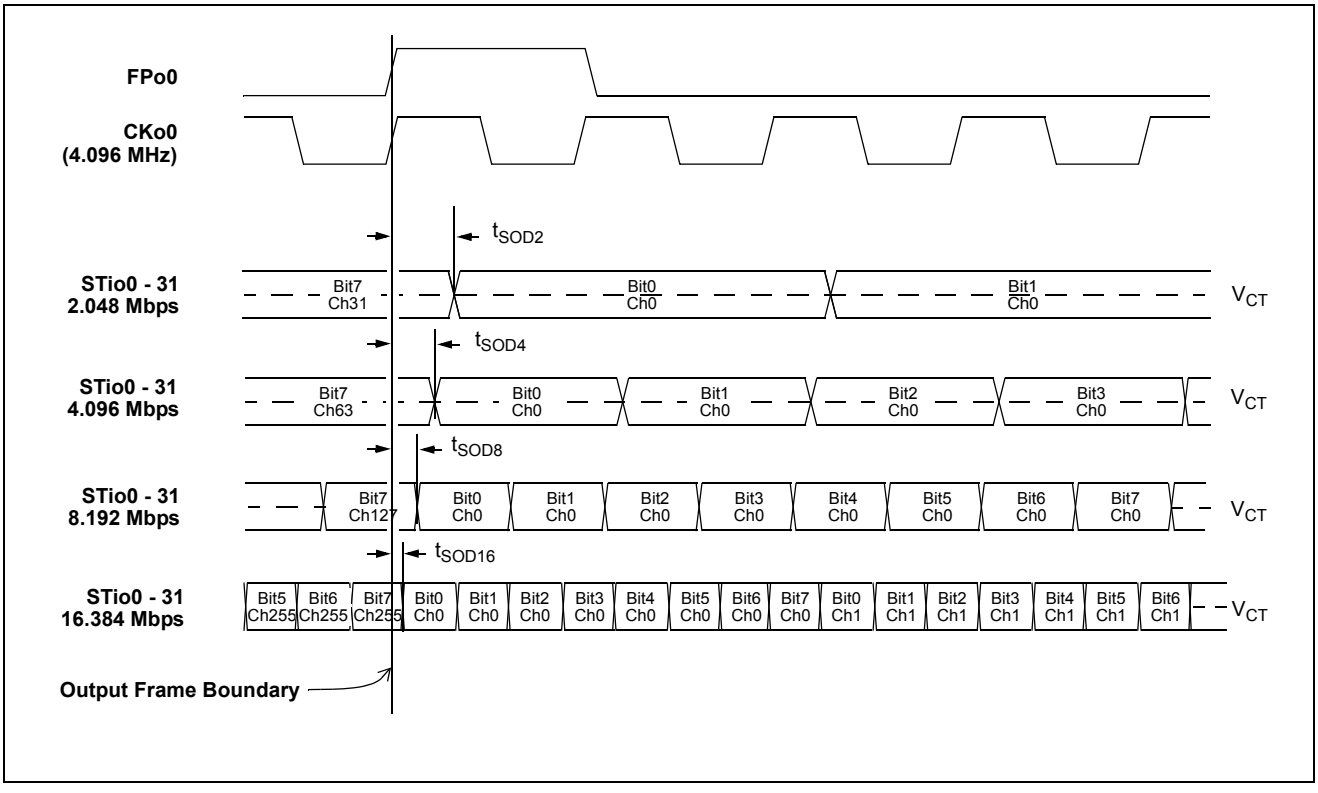


**Figure 32 - GCI-Bus Output Timing Diagram when Operated at 2, 4, 8 or 16 Mbps**

**AC Electrical Characteristics† - ST-BUS/GCI-Bus Output Tristate Timing**

| | Characteristic | Sym. | Min. | Typ.‡ | Max. | Units | Test Conditions* |
|---|---|---|---|---|---|---|---|
| 1 | STio Delay - Active to High-Z | $t_{DZ}$ | -3<br>-8 | | 7<br>0 | ns<br>ns | Multiplied Clock Mode<br>Divided Clock Mode |
| 2 | STio Delay - High-Z to Active | $t_{ZD}$ | -3<br>-8 | | 7<br>0 | ns<br>ns | Multiplied Clock Mode<br>Divided Clock Mode |
| 3 | Output Drive Enable (ODE) Delay - High-Z to Active<br><br>CKi @ 4.096 MHz<br>CKi @ 8.192 MHz<br>CKi @ 16.384 MHz | $t_{ZD_ODE}$ | | | 77<br><br>260<br>138<br>77 | ns<br><br>ns<br>ns<br>ns | Multiplied Clock Mode<br><br>Divided Clock Mode |

† Characteristics are over recommended operating conditions unless otherwise stated.

‡ Typical figures are at 25°C, VDD_CORE at 1.8 V and VDD_IO at 3.3 V and are for design aid only: not guaranteed and not subject to production testing.

Note 1: High impedance is measured by pulling to the appropriate rail with $R_L$, with timing corrected to cancel the time taken to discharge $C_L$.

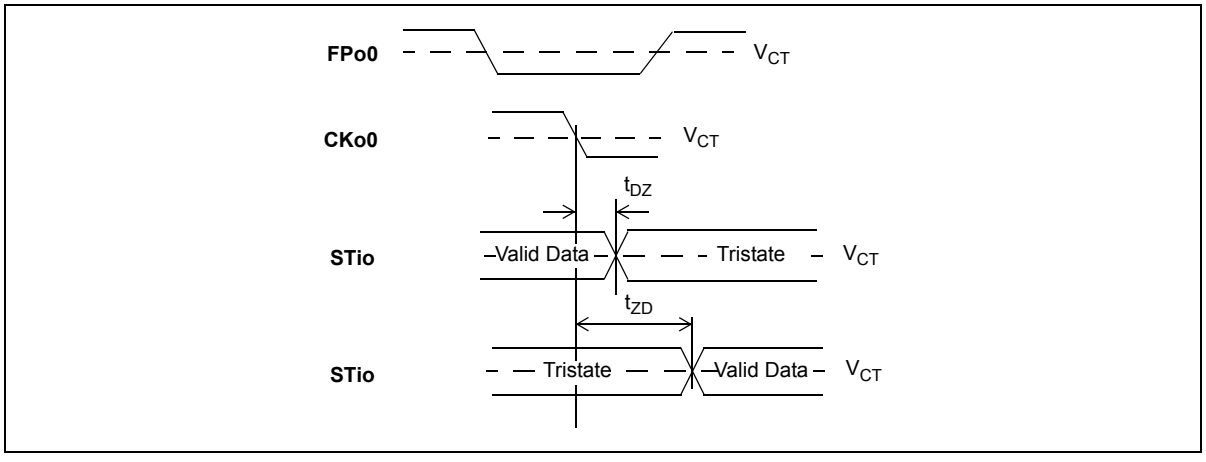


**Figure 33 - Serial Output and External Control**

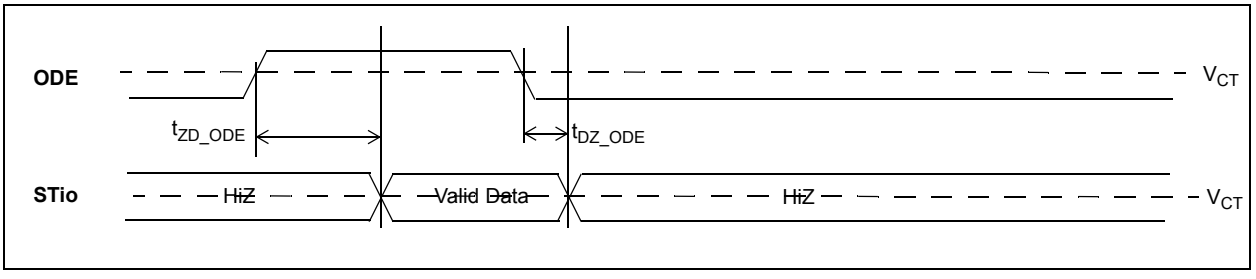


**Figure 34 - Output Drive Enable (ODE)**

**AC Electrical Characteristics† - Clock Mode Input/Output Frame Boundary Alignment**

| | Characteristic | Sym. | Min. | Typ.‡ | Max. | Units | Notes |
|---|---|---|---|---|---|---|---|
| 1 | Input and Output Frame Offset in Divided Clock Mode | $t_{FBOS}$ | 5 | | 13 | ns | |
| 2 | Input and Output Frame Offset in Multiplied Clock Mode | $t_{FBOS}$ | 2 | | 10 | ns | Input reference jitter is equal to zero. |

† Characteristics are over recommended operating conditions unless otherwise stated.

‡ Typical figures are at 25°C, VDD_CORE at 1.8 V and VDD_IO at 3.3 V and are for design aid only: not guaranteed and not subject to production testing.

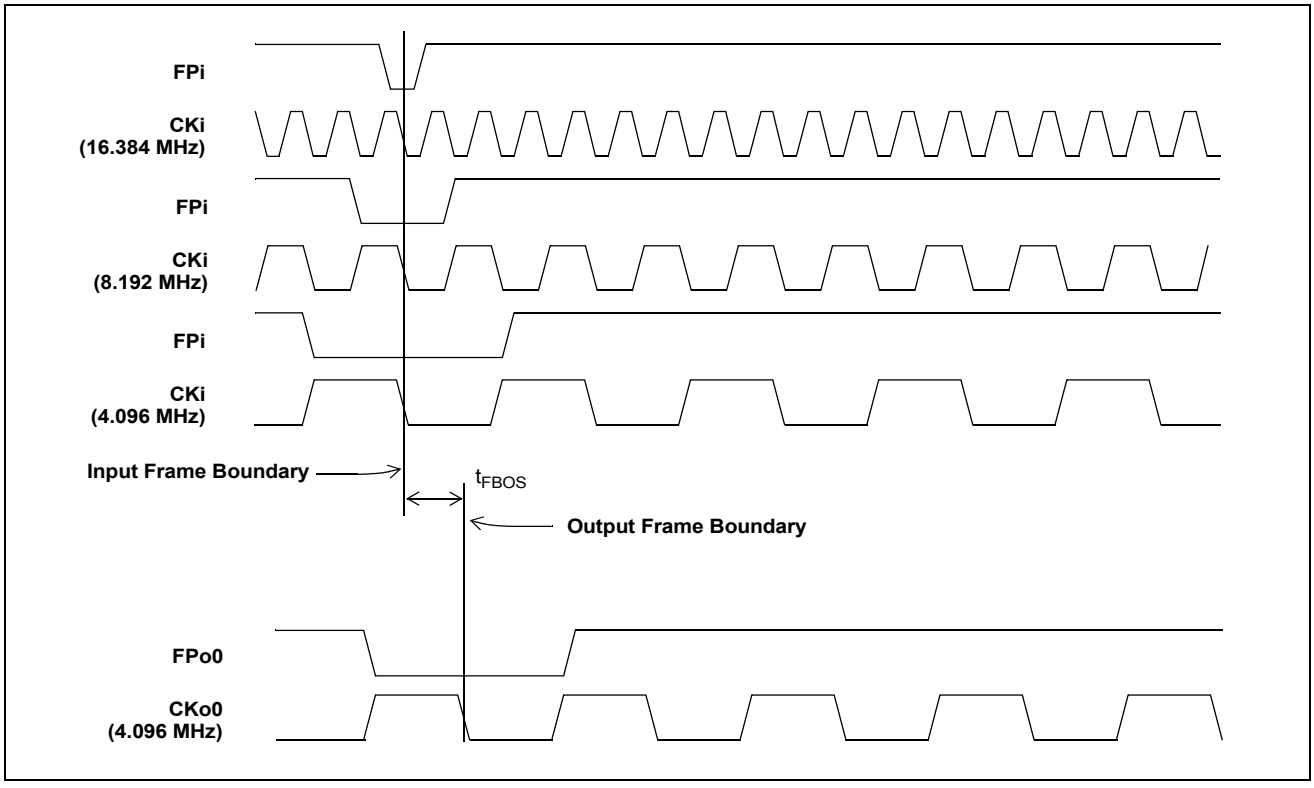


**Figure 35 - Input and Output Frame Boundary Offset**

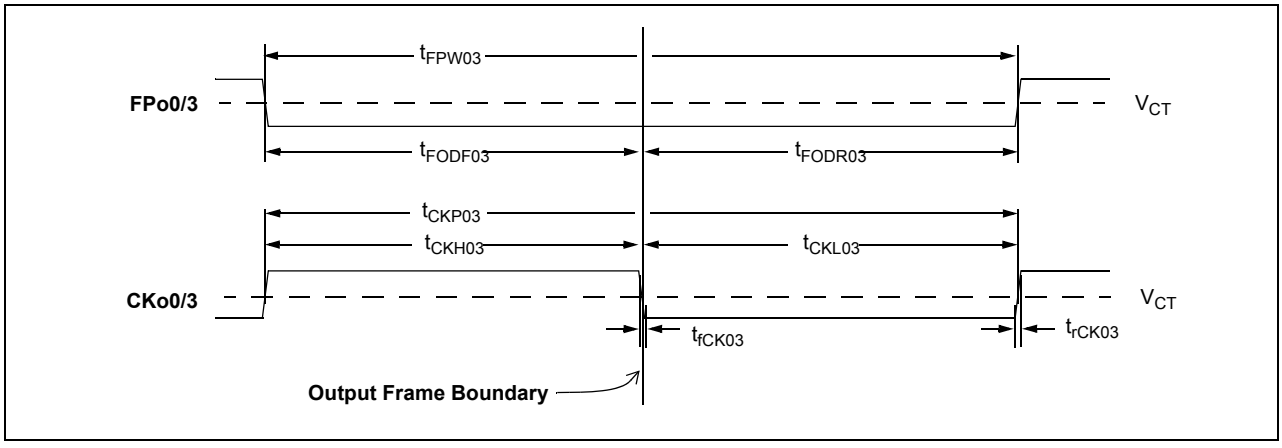


**Figure 36 - FPo0 and CKo0 Timing Diagram**

**AC Electrical Characteristics† - FPo0/CKo0 and FPo3/CKo3 (4.096 MHz) Timing for Divided Clock Mode and Multiplied Clock Mode with Less than 10 ns of Input Cycle to Cycle Variation**

| | Characteristic | Sym. | Min. | Typ.‡ | Max. | Units | Notes |
|---|---|---|---|---|---|---|---|
| 1 | FPo0 Output Pulse Width | $t_{FPW03}$ | 239 | 244 | 249 | ns | $C_L$ = 30 pF |
| 2 | FPo0 Output Delay from the FPo0 falling edge to the output frame boundary | $t_{FODF03}$ | 117 | | 127 | ns | |
| 3 | FPo0 Output Delay from the output frame boundary to the FPo0 rising edge | $t_{FODR03}$ | 117 | | 127 | ns | |
| 4 | CKo0 Output Clock Period | $t_{CKP03}$ | 239 | 244 | 249 | ns | $C_L$ = 30 pF |
| 5 | CKo0 Output High Time | $t_{CKH03}$ | 117 | | 127 | ns | |
| 6 | CKo0 Output Low Time | $t_{CKL03}$ | 117 | | 127 | ns | |
| 7 | CKo0 Output Rise/Fall Time | $t_{rCK03}$, $t_{fCK03}$ | | | 5 | ns | |

† Characteristics are over recommended operating conditions unless otherwise stated.

‡ Typical figures are at 25°C, VDD_CORE at 1.8 V and VDD_IO at 3.3 V and are for design aid only: not guaranteed and not subject to production testing.

**AC Electrical Characteristics† - FPo0/CKo0 and FPo3/CKo3 (4.096 MHz) Timing for Multiplied Clock Mode with More than 10 ns of Cycle to Cycle Variation on CKi**

| | Characteristic | Sym. | Min. | Typ.‡ | Max. | Units | Notes |
|---|---|---|---|---|---|---|---|
| 1 | FPo0 Output Pulse Width | $t_{FPW03}$ | 218 | 244 | 270 | ns | $C_L$ = 30 pF |
| 2 | FPo0 Output Delay from the FPo0 falling edge to the output frame boundary | $t_{FODF03}$ | 117 | | 127 | ns | |
| 3 | FPo0 Output Delay from the output frame boundary to the FPo0 rising edge | $t_{FODR03}$ | 97 | | 146 | ns | |
| 4 | CKo0 Output Clock Period | $t_{CKP03}$ | 218 | 244 | 270 | ns | $C_L$ = 30 pF |
| 5 | CKo0 Output High Time | $t_{CKH03}$ | 117 | | 127 | ns | |
| 6 | CKo0 Output Low Time | $t_{CKL03}$ | 97 | | 146 | ns | |
| 7 | CKo0 Output Rise/Fall Time | $t_{rCK03}$, $t_{fCK03}$ | | | 5 | ns | |

† Characteristics are over recommended operating conditions unless otherwise stated.

‡ Typical figures are at 25°C, VDD_CORE at 1.8 V and VDD_IO at 3.3 V and are for design aid only: not guaranteed and not subject to production testing.

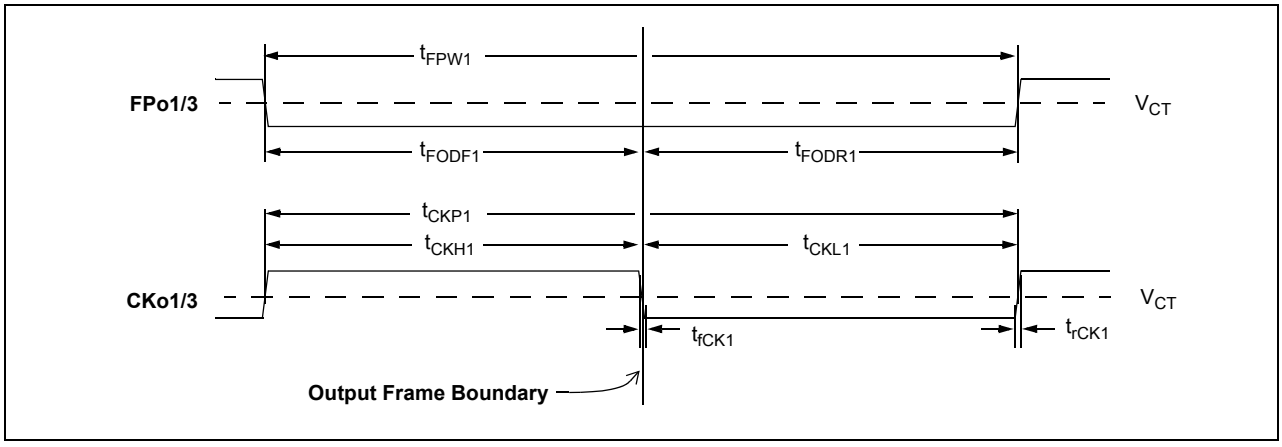


**Figure 37 - FPo1 and CKo1 Timing Diagram**

**AC Electrical Characteristics† - FPo1/CKo1 and FPo3/CKo3 (8.192 MHz) Timing for Divided Clock Mode and Multiplied Clock Mode with Less than 10 ns of Input Cycle to Cycle Variation**

| | Characteristic | Sym. | Min. | Typ.‡ | Max. | Units | Notes |
|---|---|---|---|---|---|---|---|
| 1 | FPo1 Output Pulse Width | $t_{FPW13}$ | 117 | 122 | 127 | ns | $C_L$ = 30 pF |
| 2 | FPo1 Output Delay from the FPo1 falling edge to the output frame boundary | $t_{FODF13}$ | 56 | | 66 | ns | |
| 3 | FPo1 Output Delay from the output frame boundary to the FPo1 rising edge | $t_{FODR13}$ | 56 | | 66 | ns | |
| 4 | CKo1 Output Clock Period | $t_{CKP13}$ | 117 | 122 | 127 | ns | $C_L$ = 30 pF |
| 5 | CKo1 Output High Time | $t_{CKH13}$ | 56 | | 66 | ns | |
| 6 | CKo1 Output Low Time | $t_{CKL13}$ | 56 | | 66 | ns | |
| 7 | CKo1 Output Rise/Fall Time | $t_{rCK13}$, $t_{fCK13}$ | | | 5 | ns | |

† Characteristics are over recommended operating conditions unless otherwise stated.

‡ Typical figures are at 25°C, VDD_CORE at 1.8 V and VDD_IO at 3.3 V and are for design aid only: not guaranteed and not subject to production testing.

**AC Electrical Characteristics† - FPo1/CKo1 and FPo3/CKo3 (8.192 MHz) Timing for Multiplied Clock Mode with More than 10 ns of Cycle to Cycle Variation on CKi**

| | Characteristic | Sym. | Min. | Typ.‡ | Max. | Units | Notes |
|---|---|---|---|---|---|---|---|
| 1 | FPo1 Output Pulse Width | $t_{FPW13}$ | 106 | 122 | 127 | ns | $C_L$ = 30 pF |
| 2 | FPo1 Output Delay from the FPo1 falling edge to the output frame boundary | $t_{FODF13}$ | 56 | | 66 | ns | |
| 3 | FPo1 Output Delay from the output frame boundary to the FPo1 rising edge | $t_{FODR13}$ | 46 | | 66 | ns | |
| 4 | CKo1 Output Clock Period | $t_{CKP13}$ | 106 | 122 | 148 | ns | $C_L$ = 30 pF |
| 5 | CKo1 Output High Time | $t_{CKH13}$ | 46 | | 87 | ns | |
| 6 | CKo1 Output Low Time | $t_{CKL13}$ | 46 | | 66 | ns | |
| 7 | CKo1 Output Rise/Fall Time | $t_{rCK13}$, $t_{fCK13}$ | | | 5 | ns | |

† Characteristics are over recommended operating conditions unless otherwise stated.

‡ Typical figures are at 25°C, VDD_CORE at 1.8 V and VDD_IO at 3.3 V and are for design aid only: not guaranteed and not subject to production testing.

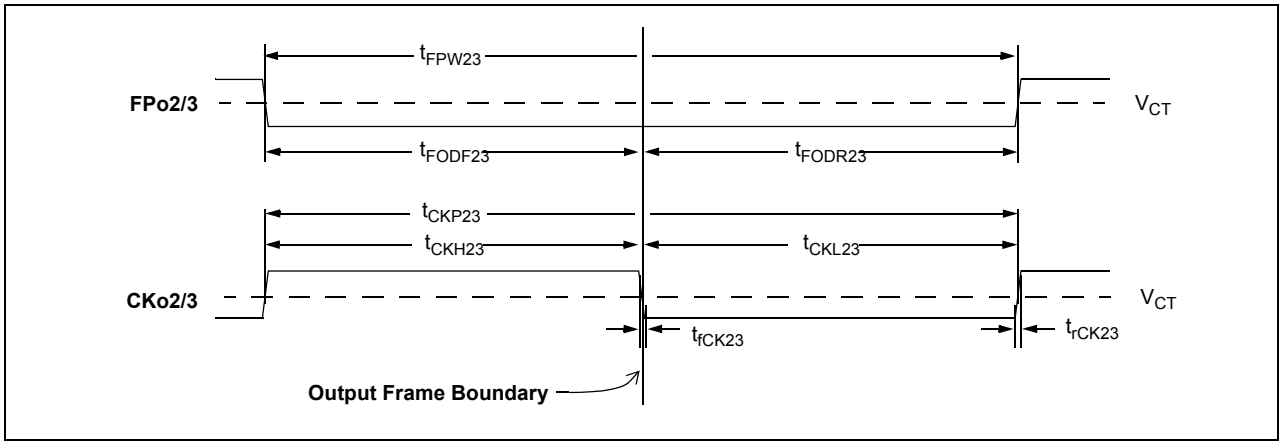


**Figure 38 - FPo2 and CKo2 Timing Diagram**

**AC Electrical Characteristics† - FPo2/CKo2 and FPo3/CKo3 (16.384 MHz) Timing for Divided Clock Mode and Multiplied Clock Mode with Less than 10 ns of Cycle to Cycle Variation on CKi**

| | Characteristic | Sym. | Min. | Typ.‡ | Max. | Units | Notes |
|---|---|---|---|---|---|---|---|
| 1 | FPo2 Output Pulse Width | $t_{FPW23}$ | 56 | 61 | 66 | ns | $C_L$ = 30 pF |
| 2 | FPo2 Output Delay from the FPo2 falling edge to the output frame boundary | $t_{FODF23}$ | 25 | | 36 | ns | |
| 3 | FPo2 Output Delay from the output frame boundary to the FPo1 rising edge | $t_{FODR23}$ | 25 | | 36 | ns | |
| 4 | CKo2 Output Clock Period | $t_{CKP23}$ | 56 | 61 | 66 | ns | $C_L$ = 30 pF |
| 5 | CKo2 Output High Time | $t_{CKH23}$ | 25 | | 36 | ns | |
| 6 | CKo2 Output Low Time | $t_{CKL23}$ | 25 | | 36 | ns | |
| 7 | CKo2 Output Rise/Fall Time | $t_{rCK23}$, $t_{fCK23}$ | | | 5 | ns | |

† Characteristics are over recommended operating conditions unless otherwise stated.

‡ Typical figures are at 25°C, VDD_CORE at 1.8 V and VDD_IO at 3.3 V and are for design aid only: not guaranteed and not subject to production testing.

**AC Electrical Characteristics† - FPo2/CKo2 and FPo3/CKo3 (16.384 MHz) Timing for Multiplied Clock Mode with More than 10 ns of Cycle to Cycle Variation on CKi**

| | Characteristic | Sym. | Min. | Typ.‡ | Max. | Units | Notes |
|---|---|---|---|---|---|---|---|
| 1 | FPo2 Output Pulse Width | $t_{FPW23}$ | 56 | 61 | 66 | ns | $C_L$ = 30 pF |
| 2 | FPo2 Output Delay from the FPo2 falling edge to the output frame boundary | $t_{FODF23}$ | 25 | | 36 | ns | |
| 3 | FPo2 Output Delay from the output frame boundary to the FPo2 rising edge | $t_{FODR23}$ | 25 | | 36 | ns | |
| 4 | CKo2 Output Clock Period | $t_{CKP2}$ | 47 | 61 | 76 | ns | $C_L$ = 30 pF |
| 5 | CKo2 Output High Time | $t_{CKH23}$ | 17 | | 43 | ns | |
| 6 | CKo2 Output Low Time | $t_{CKL23}$ | 17 | | 43 | ns | |
| 7 | CKo2 Output Rise/Fall Time | $t_{rCK23}$, $t_{fCK23}$ | | | 5 | ns | |

† Characteristics are over recommended operating conditions unless otherwise stated.

‡ Typical figures are at 25°C, VDD_CORE at 1.8 V and VDD_IO at 3.3 V and are for design aid only: not guaranteed and not subject to production testing.

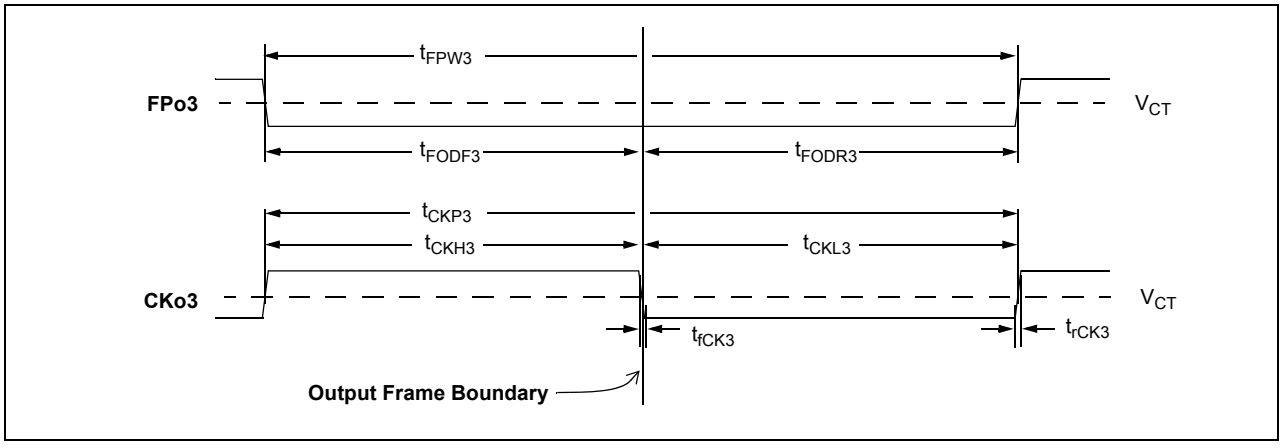


**Figure 39 - FPo3 and CKo3 Timing Diagram**

**AC Electrical Characteristics† - FPo3/CKo3 (32.768 MHz) Timing for Divided Clock Mode and Multiplied Clock Mode with Less than 10 ns of Cycle to Cycle Variation on CKi**

| | Characteristic | Sym. | Min. | Typ.‡ | Max. | Units | Notes |
|---|---|---|---|---|---|---|---|
| 1 | FPo3 Output Pulse Width | $t_{FPW3}$ | 27 | 30.5 | 34 | ns | $C_L$ = 30 pF |
| 2 | FPo3 Output Delay from the FPo3 falling edge to the output frame boundary | $t_{FODF3}$ | 10 | | 18 | ns | |
| 3 | FPo3 Output Delay from the output frame boundary to the FPo3 rising edge | $t_{FODR3}$ | 12 | | 21 | ns | |
| 4 | CKo3 Output Clock Period | $t_{CKP3}$ | 27 | 30.5 | 34 | ns | $C_L$ = 30 pF |
| 5 | CKo3 Output High Time | $t_{CKH3}$ | 12 | | 19 | ns | |
| 6 | CKo3 Output Low Time | $t_{CKL3}$ | 12 | | 19 | ns | |
| 7 | CKo3 Output Rise/Fall Time | $t_{rCK3}$, $t_{fCK3}$ | | | 5 | ns | |

† Characteristics are over recommended operating conditions unless otherwise stated.

‡ Typical figures are at 25°C, VDD_CORE at 1.8 V and VDD_IO at 3.3 V and are for design aid only: not guaranteed and not subject to production testing.

**AC Electrical Characteristics† - FPo3/CKo3 (32.768 MHz) Timing for Multiplied Clock Mode with More than 10 ns of Cycle to Cycle Variation on CKi**

| | Characteristic | Sym. | Min. | Typ.‡ | Max. | Units | Notes |
|---|---|---|---|---|---|---|---|
| 1 | FPo3 Output Pulse Width | $t_{FPW3}$ | 27 | 30.5 | 34 | ns | $C_L$ = 30 pF |
| 2 | FPo3 Output Delay from the FPo3 falling edge to the output frame boundary | $t_{FODF3}$ | 12 | | 19 | ns | |
| 3 | FPo3 Output Delay from the output frame boundary to the FPo3 rising edge | $t_{FODR3}$ | 12 | | 19 | ns | |
| 4 | CKo3 Output Clock Period | $t_{CKP3}$ | 17 | 30.5 | 44 | ns | $C_L$ = 30 pF |
| 5 | CKo3 Output High Time | $t_{CKH3}$ | 5 | | 29 | ns | |
| 6 | CKo3 Output Low Time | $t_{CKL3}$ | 12 | | 18 | ns | |
| 7 | CKo3 Output Rise/Fall Time | $t_{rCK3}$, $t_{fCK3}$ | | | 5 | ns | |

† Characteristics are over recommended operating conditions unless otherwise stated.

‡ Typical figures are at 25°C, VDD_CORE at 1.8 V and VDD_IO at 3.3 V and are for design aid only: not guaranteed and not subject to production testing.

**AC Electrical Characteristics† - Divided Clock Mode Output Timing**

| | Characteristic | Sym. | Min. | Max. | Units |
|---|---|---|---|---|---|
| 1 | CKo0 to CKo1 (8.192 MHz) delay | $t_{C1D}$ | -1 | 2 | ns |
| 2 | CKo0 to CKo2 (16.384 MHz) delay | $t_{C2D}$ | -1 | 3 | ns |
| 3 | CKo0 to CKo3 (16.384 MHz/8.192 MHz/4.096 MHz) delay | $t_{C3D}$ | -2 | 2 | ns |

† Characteristics are over recommended operating conditions unless otherwise stated.

**AC Electrical Characteristics† - Multiplied Clock Mode Output Timing**

| | Characteristic | Sym. | Min. | Max. | Units |
|---|---|---|---|---|---|
| 1 | CKo0 to CKo1 (8.192 MHz) delay | $t_{C1D}$ | -1 | 2 | ns |
| 2 | CKo0 to CKo2 (16.384 MHz) delay | $t_{C2D}$ | -1 | 3 | ns |
| 3 | CKo0 to CKo3 (32.768 MHz/16.384 MHz/8.192 MHz/4.096 MHz) delay | $t_{C3D}$ | -1 | 3 | ns |

† Characteristics are over recommended operating conditions unless otherwise stated.

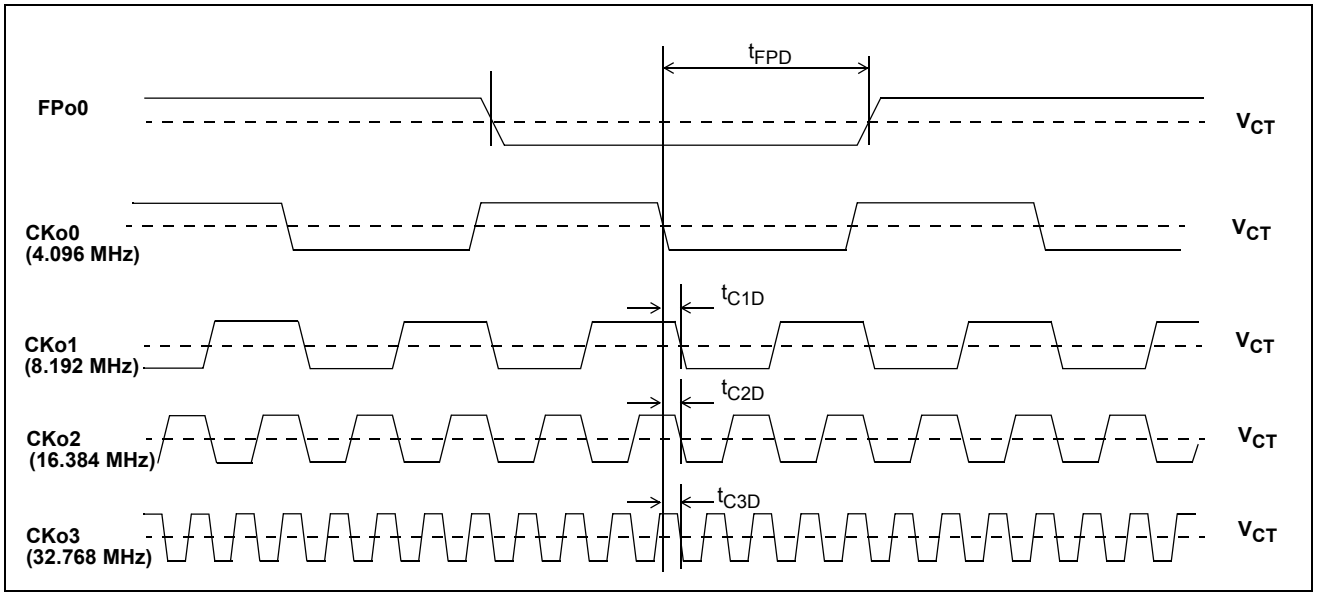


**Figure 40 - Output Timing (ST-BUS Format)**

TOP VIEW

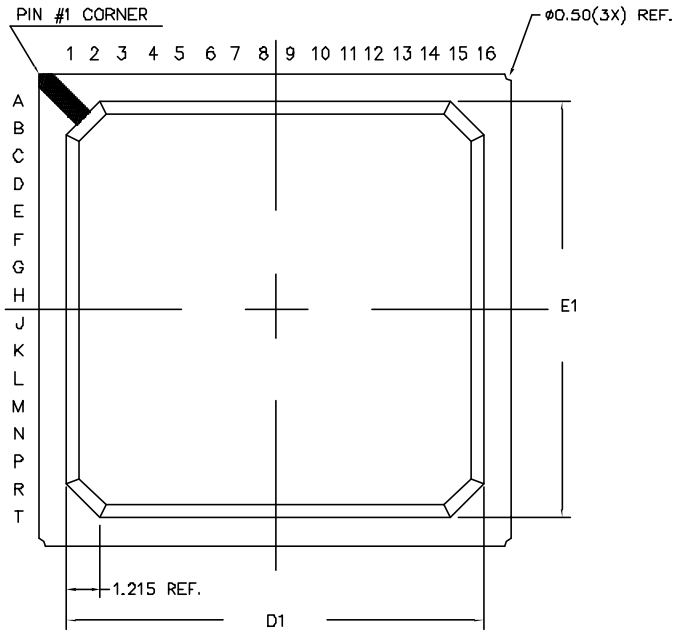


BOTTOM VIEW

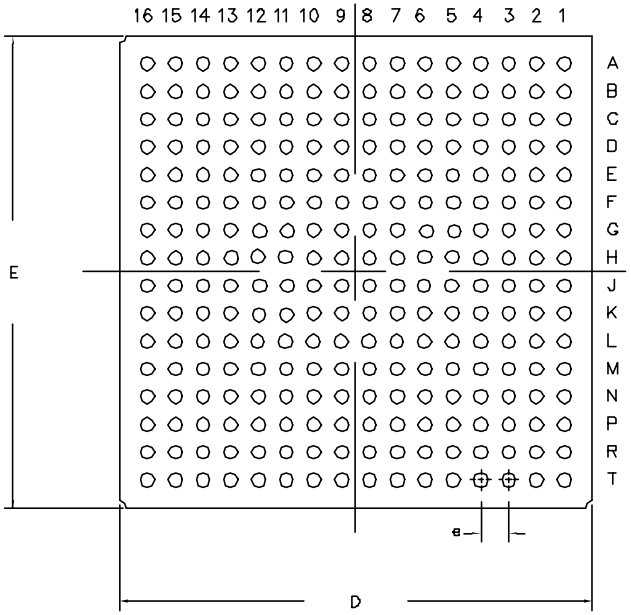


| DIMENSION | MIN | MAX |
|---|---|---|
| A | 1.42 | 1.80 |
| A1 | 0.30 | 0.50 |
| A2 | 0.85 REF | |
| D | 16.80 | 17.20 |
| D1 | 14.80 | 15.20 |
| E | 16.80 | 17.20 |
| E1 | 14.80 | 15.20 |
| b | 0.40 | 0.60 |
| e | 1.00 | |
| N | 256 | |
| Conforms to JEDEC MS-034 | | |

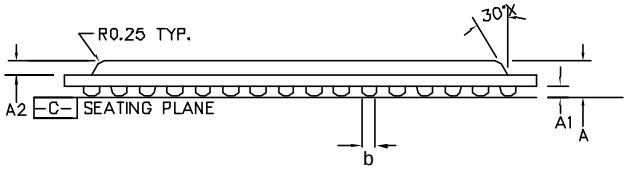


SIDE VIEW

NOTES: –
1. Controlling dimensions are in MM.
2. Seating plane is defined by the spherical crown of the solder balls.
3. Not to scale.
4. N is the number of solder balls
5. Substrate thickness is 0.36 MM.

© Zarlink Semiconductor 2003 All rights reserved.

| | | | | |
|---|---|---|---|---|
| ISSUE | 1 | | | |
| ACN | 214440 | | | |
| DATE | 26June03 | | | |
| APPRD. | | | | |

ZARLINK SEMICONDUCTOR

Previous package codes

BP/G

Package Code GA

Package Outline for 256ball BGA 17x17x1.61mm

GPD00842

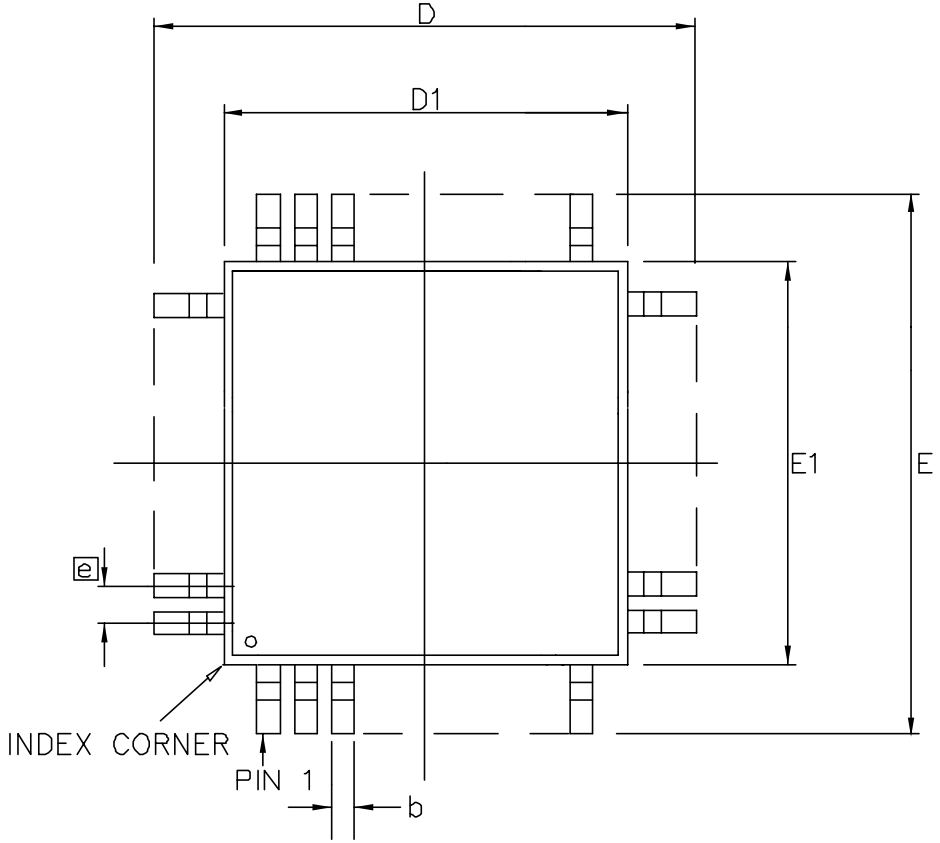


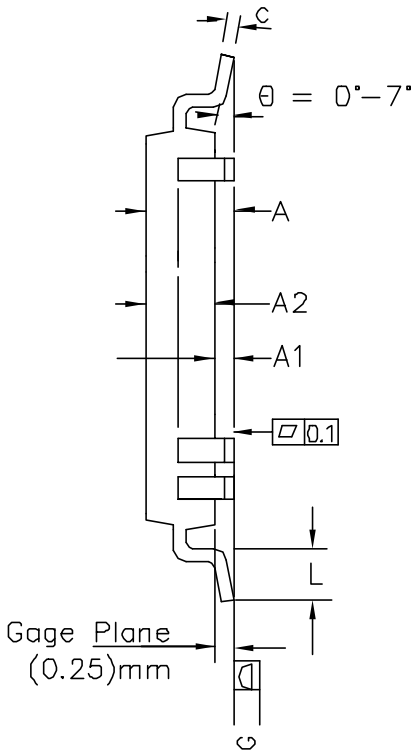


| Symbol | Control Dimensions in millimetres | | | Altern. Dimensions in inches | |
|---|---|---|---|---|---|
| | MIN | MAX | | MIN | MAX |
| A | — | 1.60 | | — | 0.063 |
| A1 | 0.05 | 0.15 | | 0.002 | 0.006 |
| A2 | 1.35 | 1.45 | | 0.053 | 0.057 |
| D | 30.00 BSC | | | 1.181 BSC | |
| D1 | 28.00 BSC | | | 1.102 BSC | |
| E | 30.00 BSC | | | 1.181 BSC | |
| E1 | 28.00 BSC | | | 1.102 BSC | |
| L | 0.45 | 0.75 | | 0.018 | 0.029 |
| e | 0.40 BSC | | | 0.016 BSC | |
| b | 0.13 | 0.23 | | 0.005 | 0.009 |
| c | 0.09 | 0.20 | | 0.003 | 0.008 |
| | Pin features | | | | |
| N | 256 | | | | |
| ND | 64 | | | | |
| NE | 64 | | | | |
| NOTE | SQUARE | | | | |

Conforms to JEDEC MS–026 BJC Iss. D

Notes:

1. Pin 1 indicator may be a corner chamfer, dot or both, located within a zone of dimension E1/4 x D1/4 from the index corner
2. All dimensioning and tolerancing conform to ANSI Y14.5–1982.
3. Dimensions D1 and E1 do not include mold protrusion – allowable mold protrusion is 0.254 mm on D1 and E1 dimensions.
4. "N" is the total number of terminals
5. Package top dimensions are smaller than bottom dimensions and top of package will not overhang bottom of package
6. Dimension b does not include Dambar protrusion.
7. Controlling Dimensions are in Millimeter
8. A1 is defined as the distance from the seating plane to the lowest point of the package body

© Zarlink Semiconductor 2003 All rights reserved.

| ISSUE | 1 | 2 | 3 | 4 |
|---|---|---|---|---|
| ACN | 214172 | 214382 | | |
| DATE | 27Mar03 | 12June03 | | |
| APPRD. | | | | |

ZARLINK SEMICONDUCTOR

Previous package codes

GP

Package Code QC

Package Outline for 256 lead LQFP (28 x 28 x 1.4mm) 2.0mm Footprint

GPD00837

**For more information about all Zarlink products visit our Web Site at**

**www.zarlink.com**

Information relating to products and services furnished herein by Zarlink Semiconductor Inc. or its subsidiaries (collectively "Zarlink") is believed to be reliable. However, Zarlink assumes no liability for errors that may appear in this publication, or for liability otherwise arising from the application or use of any such information, product or service or for any infringement of patents or other intellectual property rights owned by third parties which may result from such application or use. Neither the supply of such information or purchase of product or service conveys any license, either express or implied, under patents or other intellectual property rights owned by Zarlink or licensed from third parties by Zarlink, whatsoever. Purchasers of products are also hereby notified that the use of product in certain ways or in combination with Zarlink, or non-Zarlink furnished goods or services may infringe patents or other intellectual property rights owned by Zarlink.

This publication is issued to provide information only and (unless agreed by Zarlink in writing) may not be used, applied or reproduced for any purpose nor form part of any order or contract nor to be regarded as a representation relating to the products or services concerned. The products, their specifications, services and other information appearing in this publication are subject to change by Zarlink without notice. No warranty or guarantee express or implied is made regarding the capability, performance or suitability of any product or service. Information concerning possible methods of use is provided as a guide only and does not constitute any guarantee that such methods of use will be satisfactory in a specific piece of equipment. It is the user's responsibility to fully determine the performance and suitability of any equipment using such information and to ensure that any publication or data used is up to date and has not been superseded. Manufacturing does not necessarily include testing of all functions or parameters. These products are not suitable for use in any medical products whose failure to perform may result in significant injury or death to the user. All products and materials are sold and services provided subject to Zarlink's conditions of sale which are available on request.

Purchase of Zarlink's $I^2C$ components conveys a licence under the Philips $I^2C$ Patent rights to use these components in and $I^2C$ System, provided that the system conforms to the $I^2C$ Standard Specification as defined by Philips.

Zarlink, ZL and the Zarlink Semiconductor logo are trademarks of Zarlink Semiconductor Inc.

Copyright Zarlink Semiconductor Inc. All Rights Reserved.

TECHNICAL DOCUMENTATION - NOT FOR RESALE

Компания «ЭлектроПласт» предлагает заключение долгосрочных отношений при поставках импортных электронных компонентов на взаимовыгодных условиях!

Наши преимущества:

- Оперативные поставки широкого спектра электронных компонентов отечественного и импортного производства напрямую от производителей и с крупнейших мировых складов;
- Поставка более 17-ти миллионов наименований электронных компонентов;
- Поставка сложных, дефицитных, либо снятых с производства позиций;
- Оперативные сроки поставки под заказ (от 5 рабочих дней);
- Экспресс доставка в любую точку России;
- Техническая поддержка проекта, помощь в подборе аналогов, поставка прототипов;
- Система менеджмента качества сертифицирована по Международному стандарту ISO 9001;
- Лицензия ФСБ на осуществление работ с использованием сведений, составляющих государственную тайну;
- Поставка специализированных компонентов (Xilinx, Altera, Analog Devices, Intersil, Interpoint, Microsemi, Aeroflex, Peregrine, Syfer, Eurofarad, Texas Instrument, Miteq, Cobham, E2V, MA-COM, Hittite, Mini-Circuits,General Dynamics и др.);

Помимо этого, одним из направлений компании «ЭлектроПласт» является направление «Источники питания». Мы предлагаем Вам помощь Конструкторского отдела:

- Подбор оптимального решения, техническое обоснование при выборе компонента;
- Подбор аналогов;
- Консультации по применению компонента;
- Поставка образцов и прототипов;
- Техническая поддержка проекта;
- Защита от снятия компонента с производства.

**Как с нами связаться**

**Телефон:** 8 (812) 309 58 32 (многоканальный)
**Факс:** 8 (812) 320-02-42
**Электронная почта:** org@eplast1.ru
**Адрес:** 198099, г. Санкт-Петербург, ул. Калинина, дом 2, корпус 4, литера А.