# STW8NA60
# STH8NA60FI

## N - CHANNEL ENHANCEMENT MODE FAST POWER MOS TRANSISTOR

| TYPE | $V_{DSS}$ | $R_{DS(on)}$ | $I_D$ |
|---|---|---|---|
| STW8NA60 | 600 V | < 1 Ω | 8 A |
| STH8NA60FI | 600 V | < 1 Ω | 5 A |

- TYPICAL $R_{DS(on)}$ = 0.92 Ω
- ± 30V GATE TO SOURCE VOLTAGE RATING
- 100% AVALANCHE TESTED
- REPETITIVE AVALANCHE DATA AT 100°C
- LOW INTRINSIC CAPACITANCES
- GATE CHARGE MINIMIZED
- REDUCED THRESHOLD VOLTAGE SPREAD

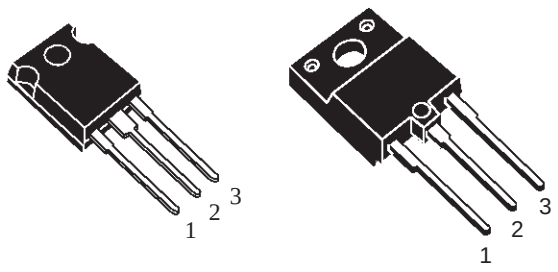


**TO-247** **ISOWATT218**

### APPLICATIONS

- HIGH CURRENT, HIGH SPEED SWITCHING
- SWITCH MODE POWER SUPPLIES (SMPS)
- DC-AC CONVERTERS FOR WELDING EQUIPMENT AND UNINTERRUPTIBLE POWER SUPPLIES AND MOTOR DRIVE

**INTERNAL SCHEMATIC DIAGRAM**

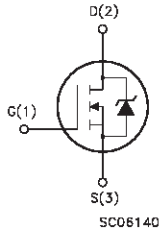


### ABSOLUTE MAXIMUM RATINGS

| Symbol | Parameter | Value | | Unit |
|---|---|---|---|---|
| | | STW8NA60 | STH8NA60FI | |
| $V_{DS}$ | Drain-source Voltage ($V_{GS}$ = 0) | 600 | | V |
| $V_{DGR}$ | Drain- gate Voltage ($R_{GS}$ = 20 kΩ) | 600 | | V |
| $V_{GS}$ | Gate-source Voltage | ± 30 | | V |
| $I_D$ | Drain Current (continuous) at $T_c$ = 25 °C | 8 | 5 | A |
| $I_D$ | Drain Current (continuous) at $T_c$ = 100 °C | 5.1 | 3.2 | A |
| $I_{DM}$(•) | Drain Current (pulsed) | 32 | 32 | A |
| $P_{tot}$ | Total Dissipation at $T_c$ = 25 °C | 150 | 60 | W |
| | Derating Factor | 1.2 | 0.48 | W/°C |
| $V_{ISO}$ | Insulation Withstand Voltage (DC) | — | 4000 | V |
| $T_{stg}$ | Storage Temperature | -65 to 150 | | °C |
| $T_j$ | Max. Operating Junction Temperature | 150 | | °C |

(•) Pulse width limited by safe operating area

## THERMAL DATA

| | | | TO-247 | ISOWATT218 | |
|---|---|---|---|---|---|
| $R_{thj\text{-}case}$ | Thermal Resistance Junction-case | Max | 0.83 | 2.08 | °C/W |
| $R_{thj\text{-}amb}$ | Thermal Resistance Junction-ambient | Max | 30 | | °C/W |
| $R_{thc\text{-}sink}$ | Thermal Resistance Case-sink | Typ | 0.1 | | °C/W |
| $T_l$ | Maximum Lead Temperature For Soldering Purpose | | 300 | | °C |

## AVALANCHE CHARACTERISTICS

| Symbol | Parameter | Max Value | Unit |
|---|---|---|---|
| $I_{AR}$ | Avalanche Current, Repetitive or Not-Repetitive (pulse width limited by $T_j$ max, $\delta < 1\%$) | 8 | A |
| $E_{AS}$ | Single Pulse Avalanche Energy (starting $T_j$ = 25 °C, $I_D = I_{AR}$, $V_{DD}$ = 50 V) | 480 | mJ |

## ELECTRICAL CHARACTERISTICS ($T_{case}$ = 25 °C unless otherwise specified)

OFF

| Symbol | Parameter | Test Conditions | Min. | Typ. | Max. | Unit |
|---|---|---|---|---|---|---|
| $V_{(BR)DSS}$ | Drain-source Breakdown Voltage | $I_D$ = 250 µA $V_{GS}$ = 0 | 600 | | | V |
| $I_{DSS}$ | Zero Gate Voltage Drain Current ($V_{GS}$ = 0)<br>Zero Gate Voltage Drain Current ($V_{GS}$ = 0) | $V_{DS}$ = Max Rating<br>$V_{DS}$ = Max Rating $T_c$ = 100 °C | | | 25<br>250 | µA<br>µA |
| $I_{GSS}$ | Gate-body Leakage Current ($V_{DS}$ = 0) | $V_{GS}$ = ± 30 V | | | ± 100 | nA |

ON (*)

| Symbol | Parameter | Test Conditions | Min. | Typ. | Max. | Unit |
|---|---|---|---|---|---|---|
| $V_{GS(th)}$ | Gate Threshold Voltage | $V_{DS}$ = $V_{GS}$ $I_D$ = 250 µA | 2.25 | 3 | 3.75 | V |
| $R_{DS(on)}$ | Static Drain-source On Resistance | $V_{GS}$ = 10V $I_D$ = 4 A | | 0.92 | 1 | Ω |
| $I_{D(on)}$ | On State Drain Current | $V_{DS} > I_{D(on)} \times R_{DS(on)max}$<br>$V_{GS}$ = 10 V | 8 | | | A |

DYNAMIC

| Symbol | Parameter | Test Conditions | Min. | Typ. | Max. | Unit |
|---|---|---|---|---|---|---|
| $g_{fs}$ (*) | Forward Transconductance | $V_{DS} > I_{D(on)} \times R_{DS(on)max}$ $I_D$ = 4 A | 4.5 | 6.6 | | S |
| $C_{iss}$<br>$C_{oss}$<br>$C_{rss}$ | Input Capacitance<br>Output Capacitance<br>Reverse Transfer Capacitance | $V_{DS}$ = 25 V f = 1 MHz $V_{GS}$ = 0 | | 1350<br>175<br>45 | 1690<br>230<br>60 | pF<br>pF<br>pF |

**ELECTRICAL CHARACTERISTICS** (continued)

SWITCHING ON

| Symbol | Parameter | Test Conditions | Min. | Typ. | Max. | Unit |
|---|---|---|---|---|---|---|
| $t_{d(on)}$<br>$t_r$ | Turn-on Time<br>Rise Time | $V_{DD}$ = 300 V $I_D$ = 4 A<br>$R_G$ = 4.7 Ω $V_{GS}$ = 10 V<br>(see test circuit, figure 3) | | 20<br>35 | 28<br>35 | ns<br>ns |
| $(di/dt)_{on}$ | Turn-on Current Slope | $V_{DD}$ = 480 V $I_D$ = 8 A<br>$R_G$ = 47 Ω $V_{GS}$ = 10 V<br>(see test circuit, figure 5) | | 200 | | A/µs |
| $Q_g$<br>$Q_{gs}$<br>$Q_{gd}$ | Total Gate Charge<br>Gate-Source Charge<br>Gate-Drain Charge | $V_{DD}$ = 480 V $I_D$ = 8 A $V_{GS}$ = 10 V | | 58<br>9<br>27 | 82 | nC<br>nC<br>nC |

SWITCHING OFF

| Symbol | Parameter | Test Conditions | Min. | Typ. | Max. | Unit |
|---|---|---|---|---|---|---|
| $t_{r(Voff)}$<br>$t_f$<br>$t_c$ | Off-voltage Rise Time<br>Fall Time<br>Cross-over Time | $V_{DD}$ = 640 V $I_D$ = 8 A<br>$R_G$ = 4.7 Ω $V_{GS}$ = 10 V<br>(see test circuit, figure 5) | | 16<br>16<br>26 | 23<br>23<br>37 | ns<br>ns<br>ns |

SOURCE DRAIN DIODE

| Symbol | Parameter | Test Conditions | Min. | Typ. | Max. | Unit |
|---|---|---|---|---|---|---|
| $I_{SD}$<br>$I_{SDM}$(•) | Source-drain Current<br>Source-drain Current (pulsed) | | | | 8<br>32 | A<br>A |
| $V_{SD}$ (*) | Forward On Voltage | $I_{SD}$ = 8 A $V_{GS}$ = 0 | | | 1.6 | V |
| $t_{rr}$<br>$Q_{rr}$<br>$I_{RRM}$ | Reverse Recovery Time<br>Reverse Recovery Charge<br>Reverse Recovery Current | $I_{SD}$ = 8 A di/dt = 100 A/µs<br>$V_{DD}$ = 100 V $T_j$ = 150 °C<br>(see test circuit, figure 5) | | 600<br>10<br>33 | | ns<br>µC<br>A |

(*) Pulsed: Pulse duration = 300 µs, duty cycle 1.5 %

(•) Pulse width limited by safe operating area

Safe Operating Area for TO-247

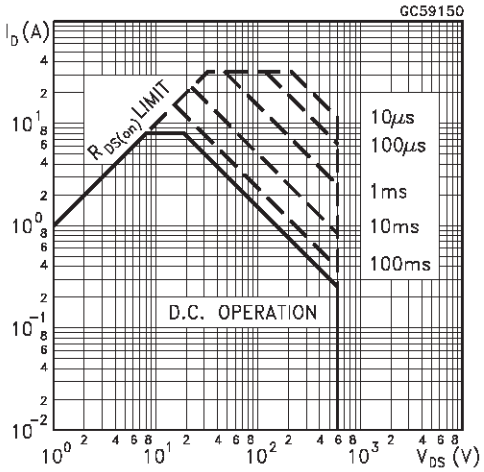


Safe Operating Area for ISOWATT218

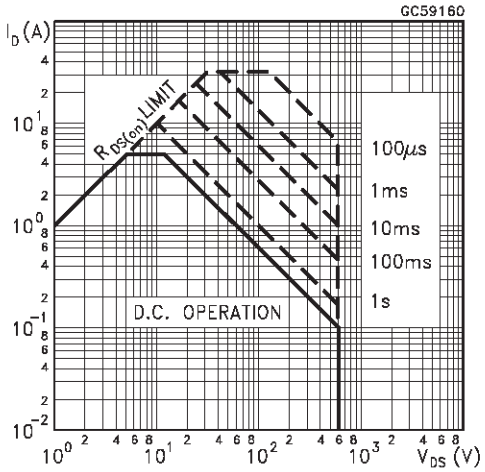

Thermal Impedance for TO-247

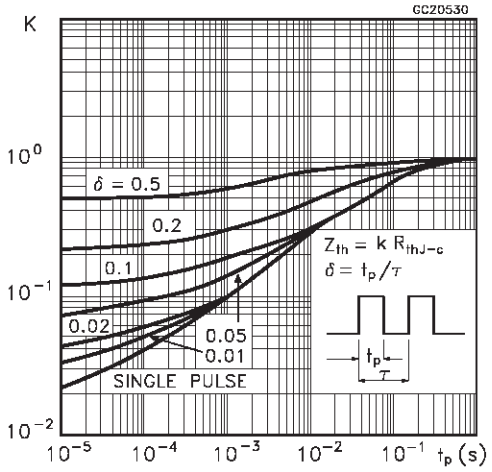


Thermal Impedance for ISOWATT218

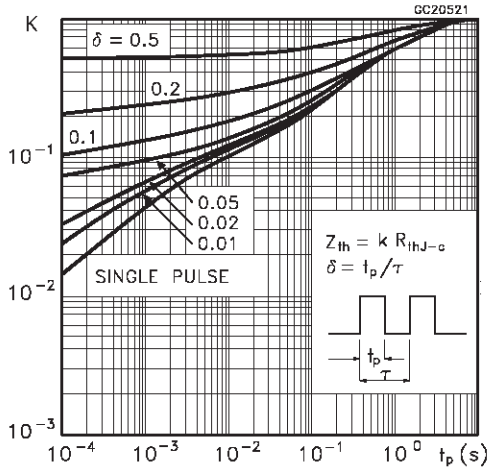


Derating Curve for TO-247

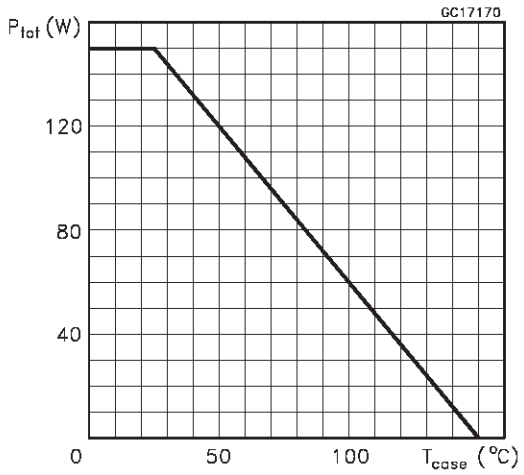


Derating Curve for ISOWATT218

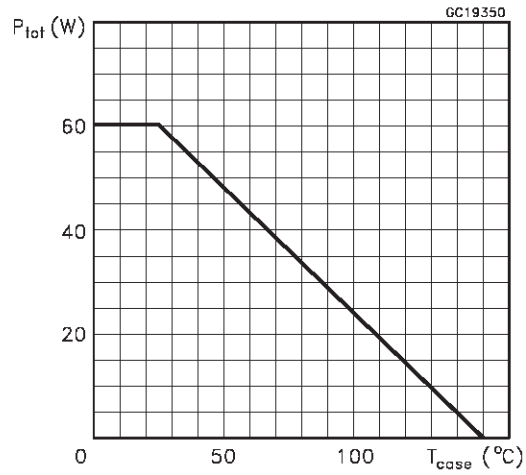


Output Characteristics

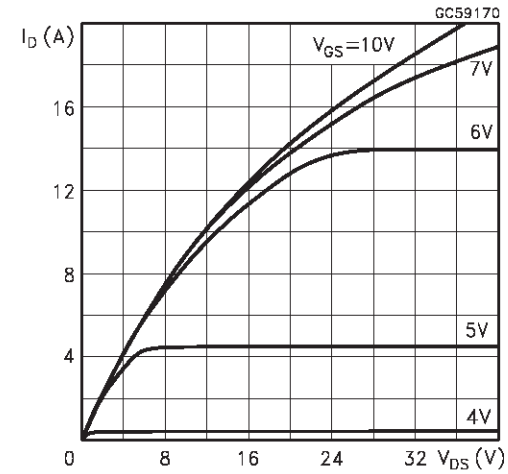


Transfer Characteristics

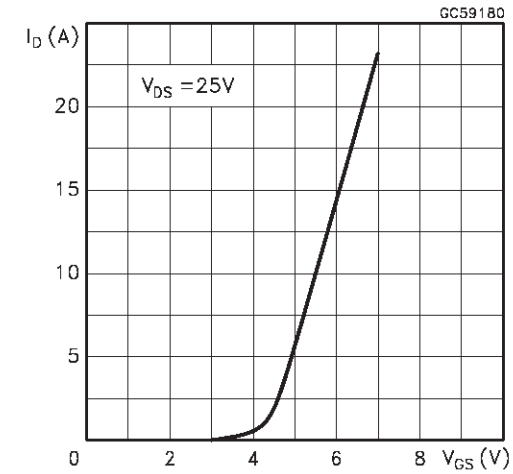

Transconductance

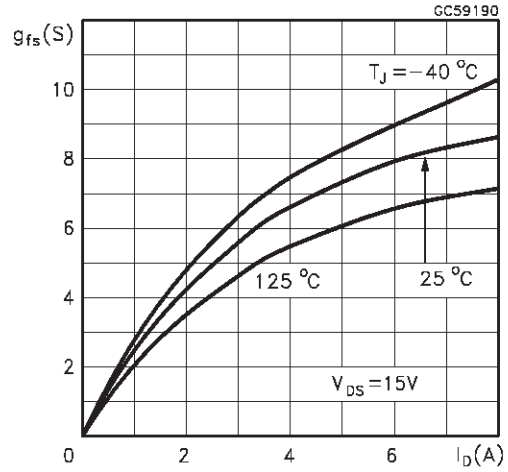


Static Drain-source On Resistance

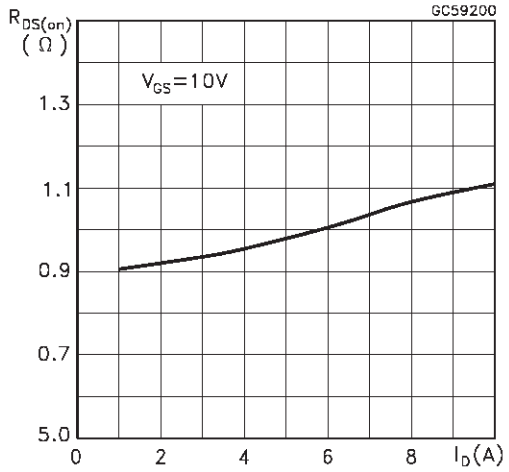


Gate Charge vs Gate-source Voltage

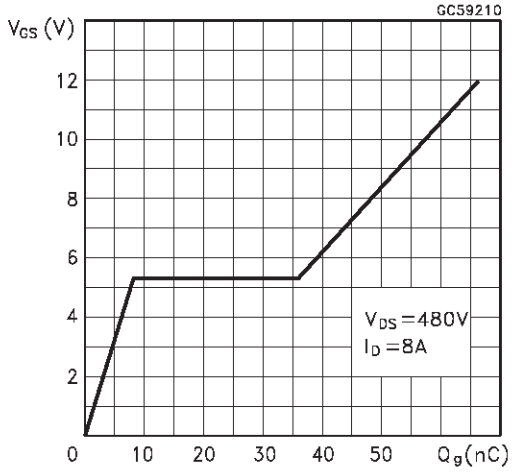


Capacitance Variations

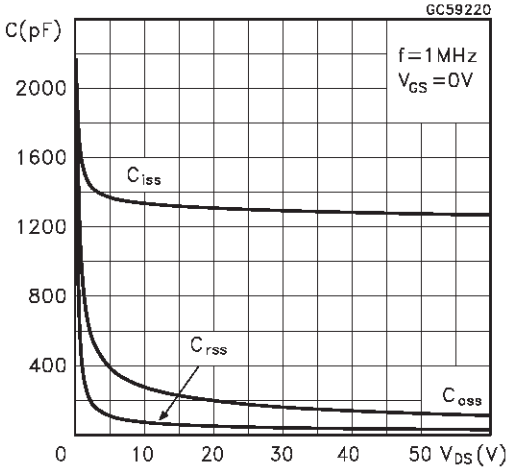


Normalized Gate Threshold Voltage vs Temperature

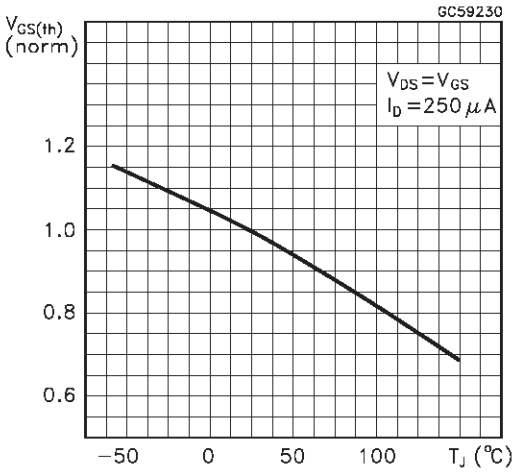


Normalized On Resistance vs Temperature

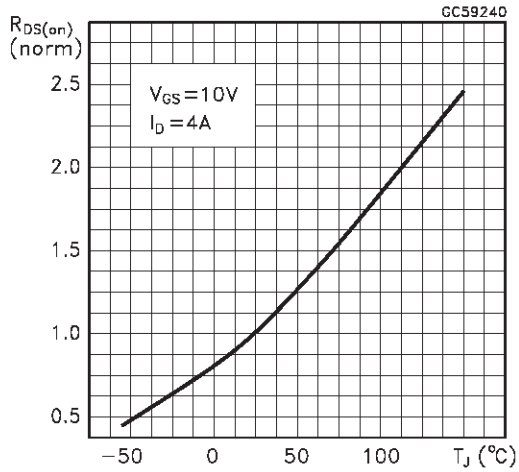

Turn-on Current Slope

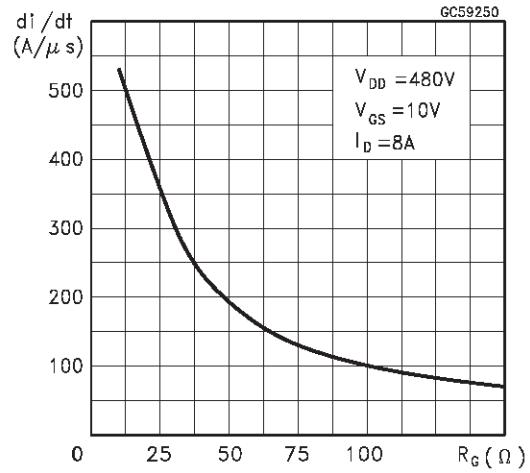


Turn-off Drain-source Voltage Slope

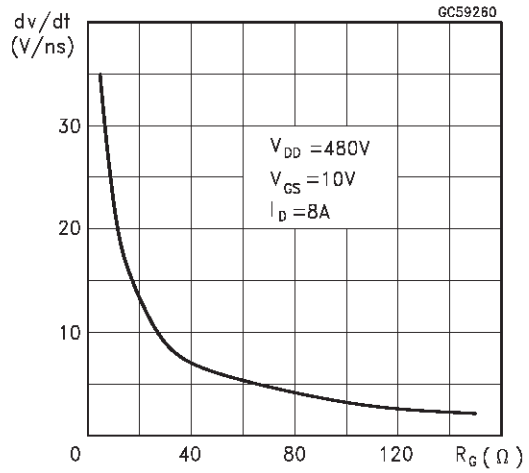


Cross-over Time

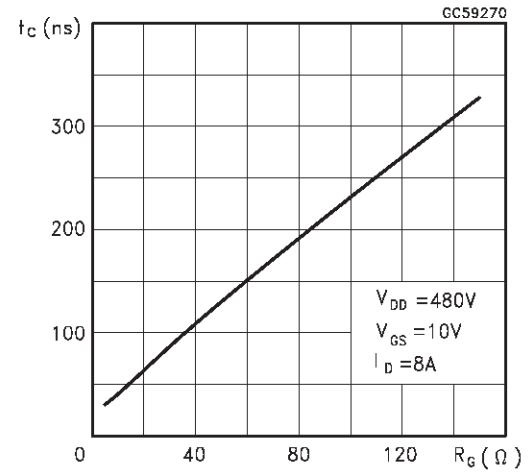


Switching Safe Operating Area

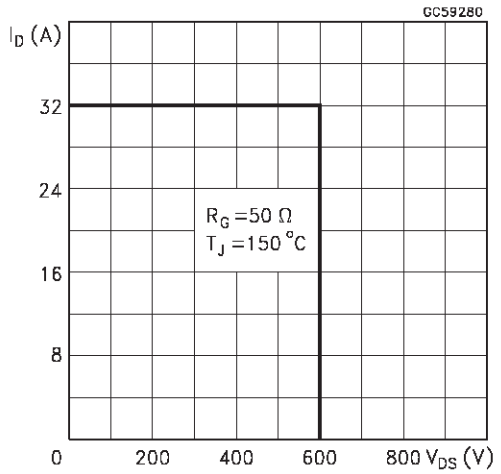


Accidental Overload Area

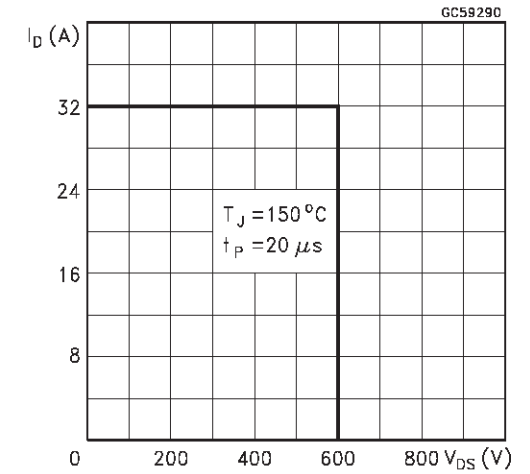


Source-drain Diode Forward Characteristics

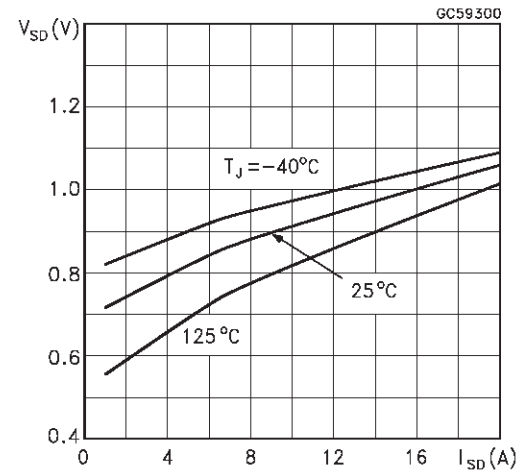

**Fig. 1:** Unclamped Inductive Load Test Circuit

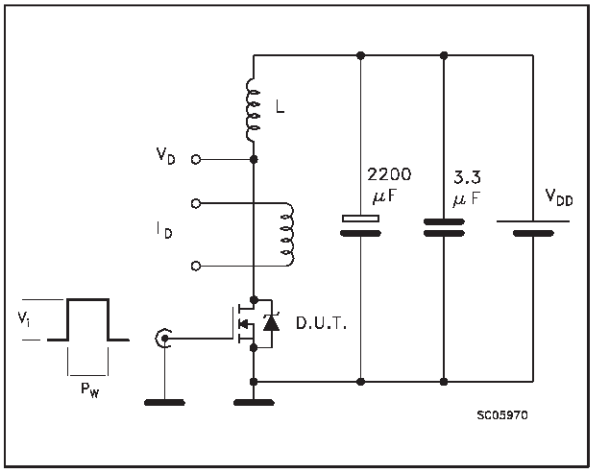


**Fig. 2:** Unclamped Inductive Waveform

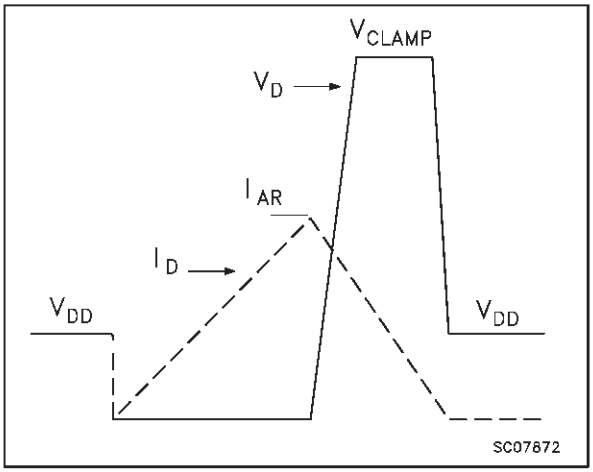


**Fig. 3:** Switching Times Test Circuits For Resistive Load

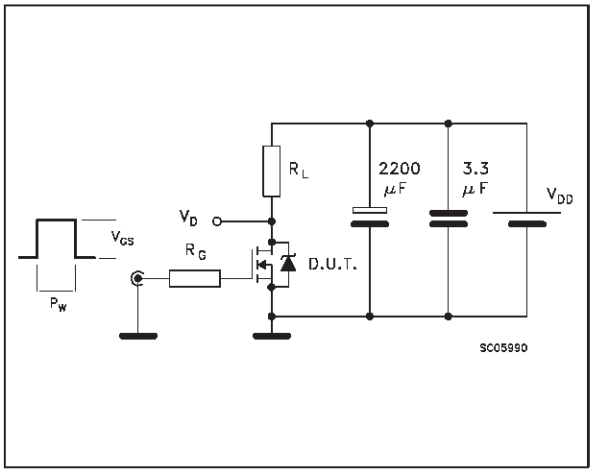


**Fig. 4:** Gate Charge test Circuit

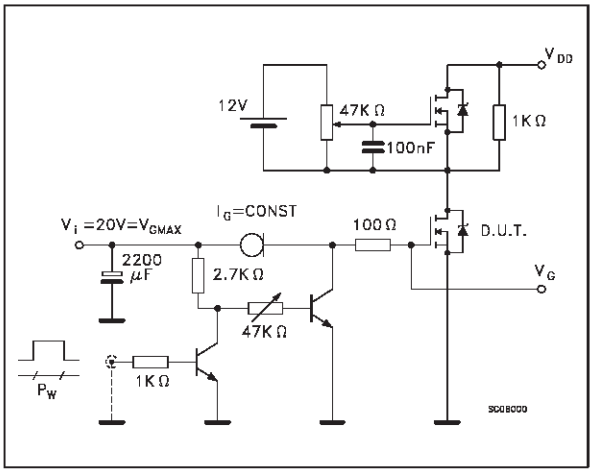


**Fig. 5:** Test Circuit For Inductive Load Switching And Diode Recovery Times

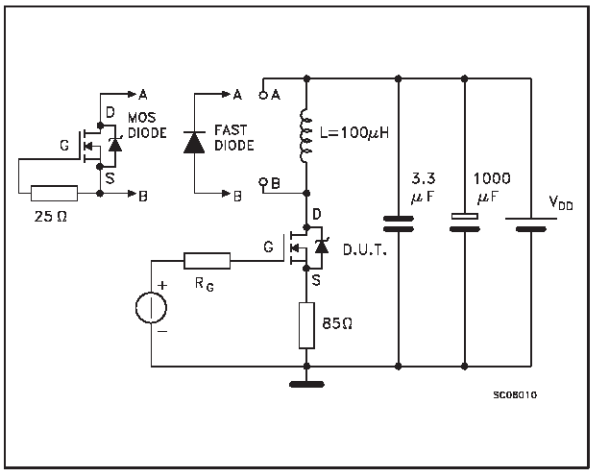

## TO-247 MECHANICAL DATA

| DIM. | mm | | | inch | | |
|---|---|---|---|---|---|---|
| | MIN. | TYP. | MAX. | MIN. | TYP. | MAX. |
| A | 4.7 | | 5.3 | 0.185 | | 0.209 |
| D | 2.2 | | 2.6 | 0.087 | | 0.102 |
| E | 0.4 | | 0.8 | 0.016 | | 0.031 |
| F | 1 | | 1.4 | 0.039 | | 0.055 |
| F3 | 2 | | 2.4 | 0.079 | | 0.094 |
| F4 | 3 | | 3.4 | 0.118 | | 0.134 |
| G | | 10.9 | | | 0.429 | |
| H | 15.3 | | 15.9 | 0.602 | | 0.626 |
| L | 19.7 | | 20.3 | 0.776 | | 0.779 |
| L3 | 14.2 | | 14.8 | 0.559 | 0.413 | 0.582 |
| L4 | | 34.6 | | | 1.362 | |
| L5 | | 5.5 | | | 0.217 | |
| M | 2 | | 3 | 0.079 | | 0.118 |
| Dia | 3.55 | | 3.65 | 0.140 | | 0.144 |

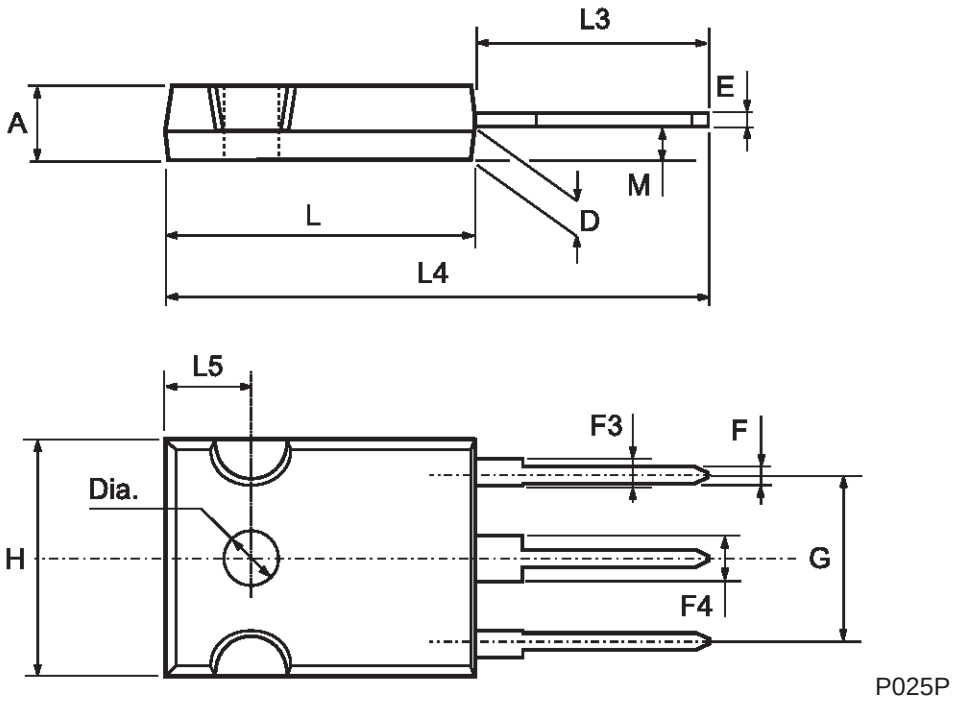

## ISOWATT218 MECHANICAL DATA

| DIM. | mm | | | inch | | |
|---|---|---|---|---|---|---|
| | MIN. | TYP. | MAX. | MIN. | TYP. | MAX. |
| A | 5.35 | | 5.65 | 0.210 | | 0.222 |
| C | 3.3 | | 3.8 | 0.130 | | 0.149 |
| D | 2.9 | | 3.1 | 0.114 | | 0.122 |
| D1 | 1.88 | | 2.08 | 0.074 | | 0.081 |
| E | 0.75 | | 1 | 0.029 | | 0.039 |
| F | 1.05 | | 1.25 | 0.041 | | 0.049 |
| G | 10.8 | | 11.2 | 0.425 | | 0.441 |
| H | 15.8 | | 16.2 | 0.622 | | 0.637 |
| L1 | 20.8 | | 21.2 | 0.818 | | 0.834 |
| L2 | 19.1 | | 19.9 | 0.752 | | 0.783 |
| L3 | 22.8 | | 23.6 | 0.897 | | 0.929 |
| L4 | 40.5 | | 42.5 | 1.594 | | 1.673 |
| L5 | 4.85 | | 5.25 | 0.190 | | 0.206 |
| L6 | 20.25 | | 20.75 | 0.797 | | 0.817 |
| M | 3.5 | | 3.7 | 0.137 | | 0.145 |
| N | 2.1 | | 2.3 | 0.082 | | 0.090 |
| U | | 4.6 | | | 0.181 | |

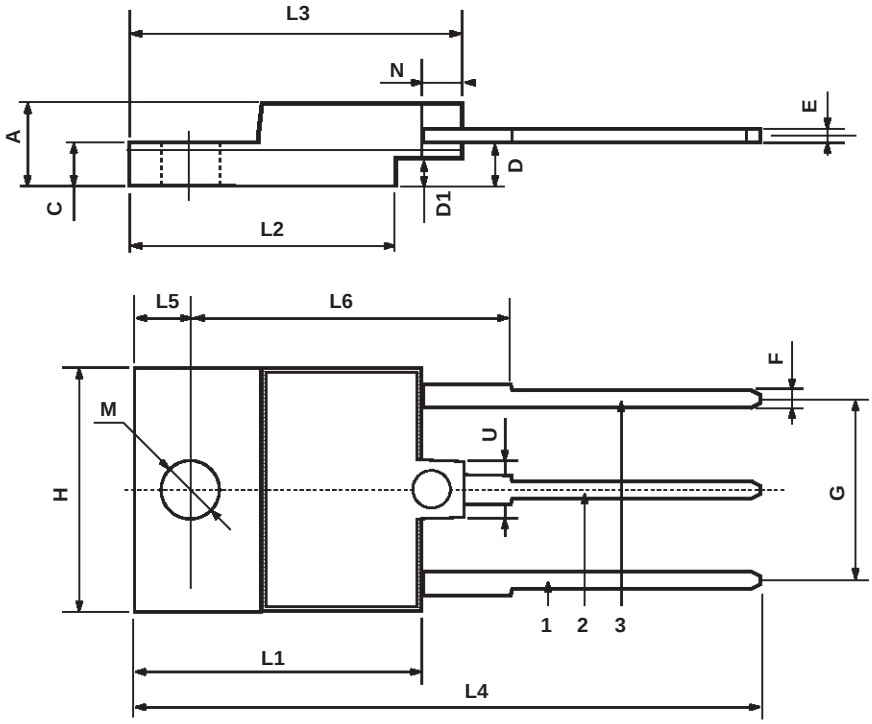


P025C

Information furnished is believed to be accurate and reliable. However, STMicroelectronics assumes no responsibility for the consequences of use of such information nor for any infringement of patents or other rights of third parties which may result from its use. No license is granted by implication or otherwise under any patent or patent rights of STMicroelectronics. Specification mentioned in this publication are subject to change without notice. This publication supersedes and replaces all information previously supplied. STMicroelectronics products are not authorized for use as critical components in life support devices or systems without express written approval of STMicroelectronics.

The ST logo is a trademark of STMicroelectronics

© 1998 STMicroelectronics – Printed in Italy – All Rights Reserved

STMicroelectronics GROUP OF COMPANIES

Australia - Brazil - Canada - China - France - Germany - Italy - Japan - Korea - Malaysia - Malta - Mexico - Morocco - The Netherlands - Singapore - Spain - Sweden - Switzerland - Taiwan - Thailand - United Kingdom - U.S.A.

**http://www.st.com**

Компания «ЭлектроПласт» предлагает заключение долгосрочных отношений при поставках импортных электронных компонентов на взаимовыгодных условиях!

Наши преимущества:

- Оперативные поставки широкого спектра электронных компонентов отечественного и импортного производства напрямую от производителей и с крупнейших мировых складов;
- Поставка более 17-ти миллионов наименований электронных компонентов;
- Поставка сложных, дефицитных, либо снятых с производства позиций;
- Оперативные сроки поставки под заказ (от 5 рабочих дней);
- Экспресс доставка в любую точку России;
- Техническая поддержка проекта, помощь в подборе аналогов, поставка прототипов;
- Система менеджмента качества сертифицирована по Международному стандарту ISO 9001;
- Лицензия ФСБ на осуществление работ с использованием сведений, составляющих государственную тайну;
- Поставка специализированных компонентов (Xilinx, Altera, Analog Devices, Intersil, Interpoint, Microsemi, Aeroflex, Peregrine, Syfer, Eurofarad, Texas Instrument, Miteq, Cobham, E2V, MA-COM, Hittite, Mini-Circuits,General Dynamics и др.);

Помимо этого, одним из направлений компании «ЭлектроПласт» является направление «Источники питания». Мы предлагаем Вам помощь Конструкторского отдела:

- Подбор оптимального решения, техническое обоснование при выборе компонента;
- Подбор аналогов;
- Консультации по применению компонента;
- Поставка образцов и прототипов;
- Техническая поддержка проекта;
- Защита от снятия компонента с производства.

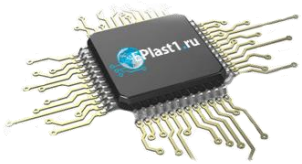


**Как с нами связаться**

**Телефон:** 8 (812) 309 58 32 (многоканальный)
**Факс:** 8 (812) 320-02-42
**Электронная почта:** org@eplast1.ru
**Адрес:** 198099, г. Санкт-Петербург, ул. Калинина, дом 2, корпус 4, литера А.