Cree® Screen Master® 5-mm Oval LED C5SMF-RJF/GJF/BJF C5SMF-RJE/GJE/BJE C5SME-RJF/RJE

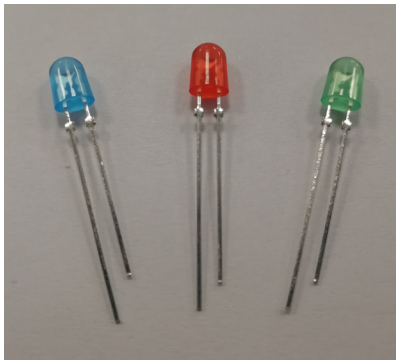

PRODUCT DESCRIPTION

The oval LED is specifically designed for variable-message signs and passenger-information signs.The oval-shaped radiation pattern and high luminous intensity ensure that these devices are excellent for wide-field-of -view outdoor applications where a wide viewing angle and readability in sunlight are essential.

These lamps are made with an advanced optical-grade epoxy that offers superior high-temperature and high-moisture-resistance performance in outdoor signal and sign applications. The encapsulation resin contains anti-UV material in order to reduce the effects of long-term exposure to direct sunlight.

FEATURES

- Size (mm): 5
- Color and Typical Dominant Wavelength:
  Red (621nm)
  Green(527nm)
  Blue(470nm)
- Luminous Intensity (mcd)
  C5SMF-RJF/RJE: (1100-4180)
  C5SMF-GJF/GJE: (2130-8200)
  C5SMF-BJF/BJE: (550-2130)
  C5SME-RJF/RJE: (770-2130)
- Lead - Free
- RoHS Compliant

APPLICATIONS

- Electronic Signs & Signals (ESS)
- Full Color video screen
- Motorway Signs
- Variable Message Sign (VMS)
- Advertising signs
- Petrol Signs

Copyright © 2019 Cree, Inc. All rights reserved. The information in this document is subject to change without notice. Cree and the Cree logo are registered trademarks of Cree, Inc.

Cree, Inc.
4600 Silicon Drive
Durham, NC 27703
USA Tel: +1.919.313.5300

ABSOLUTE MAXIMUM RATINGS (T_A = 25°C)

Items	Symbol	Absolute Maximum Rating		Unit
		Red	Blue and Green	
Forward Current	I_F	50 Note1	35	mA
Peak Forward Current Note2	I_{FP}	200	100	mA
Reverse Voltage	V_R	5	5	V
Power Dissipation	P_D	130	140	mW
Operation Temperature	T_{opr}	-40 ~ +95		°C
Storage Temperature	T_{stg}	-40 ~ +100		°C
Lead Soldering Temperature	T_{sol}	Max. 260°C for 3 sec. max. (3 mm from the base of the epoxy bulb)		
Electrostatic Discharge Classification (MIL-STD-883E)	ESD	Class 2		

Note:
1. For long term performance the drive currents between 10mA and 30mA are recommended. Please contact CREE sales representative for more information on recommended drive conditions.
2. Pulse width ≤0.1 msec, duty ≤1/10.

TYPICAL ELECTRICAL & OPTICAL CHARACTERISTICS (T_A = 25°C)

Characteristics	Color	Symbol	Condition	Unit	Minimum	Typical	Maximum
Forward Voltage	Red	V_F	I_F = 20 mA	V		2.1	2.6
	Blue/Green	V_F	I_F = 20 mA	V		3.4	4.0
Reverse Current	Red	I_R	V_R = 5 V	μA			100
	Blue/Green	I_R	V_R = 5 V	μA			100
Dominant Wavelength	Red	λ_D	I_F = 20 mA	nm	619	621	624
	Green	λ_D	I_F = 20 mA	nm	520	527	535
	Blue	λ_D	I_F = 20 mA	nm	460	470	475
Luminous Intensity	C5SMF - Red	I_V	I_F = 20 mA	mcd	1100	2200	
	C5SME - Red	I_V	I_F = 20 mA	mcd	770	1100	
	Green	I_V	I_F = 20 mA	mcd	2130	4400	
	Blue	I_V	I_F = 20 mA	mcd	550	1100	

Note: Continuous reverse voltage can cause LED damage.

Copyright © 2019 Cree, Inc. All rights reserved. The information in this document is subject to change without notice. Cree and the Cree logo are registered trademarks of Cree, Inc.

INTENSITY BIN LIMIT (I_F = 20 mA)

Red: C5SMF

Bin Code	Sub-bin	Min. (mcd)	Max. (mcd)
T0	T1	1100	1205
	T2	1205	1310
	T3	1310	1415
	T4	1415	1520
U0	U1	1520	1672
	U2	1672	1824
	U3	1824	1976
	U4	1976	2130
V0	V1	2130	2347
	V2	2347	2564
	V3	2564	2781
	V4	2781	3000
W0	W1	3000	3295
	W2	3295	3590
	W3	3590	3885
	W4	3885	4180

Green: C5SMF

Bin Code	Sub-bin	Min. (mcd)	Max. (mcd)
V0	V1	2130	2347
	V2	2347	2564
	V3	2564	2781
	V4	2781	3000
W0	W1	3000	3295
	W2	3295	3590
	W3	3590	3885
	W4	3885	4180
X0	X1	4180	4600
	X2	4600	5020
	X3	5020	5440
	X4	5440	5860
Y0	Y1	5860	6445
	Y2	6445	7030
	Y3	7030	7615
	Y4	7615	8200

Blue: C5SMF

Bin Code	Sub-bin	Min. (mcd)	Max. (mcd)
R0	R1	550	605
	R2	605	660
	R3	660	715
	R4	715	770
S0	S1	770	852
	S2	852	934
	S3	934	1017
	S4	1017	1100
T0	T1	1100	1205
	T2	1205	1310
	T3	1310	1415
	T4	1415	1520
U0	U1	1520	1672
	U2	1672	1824
	U3	1824	1976
	U4	1976	2130

Red: C5SME

Bin Code	Sub-bin	Min. (mcd)	Max. (mcd)
S0	S1	770	852
	S2	852	934
	S3	934	1017
	S4	1017	1100
T0	T1	1100	1205
	T2	1205	1310
	T3	1310	1415
	T4	1415	1520
U0	U1	1520	1672
	U2	1672	1824
	U3	1824	1976
	U4	1976	2130

- Tolerance of measurement of luminous intensity is ±15%

COLOR BIN LIMIT (I_F = 20 mA)

Red

Bin Code	Min.(nm)	Max.(nm)
RB	619	624

Green

Bin Code	Min.(nm)	Max.(nm)
G7	520	525
G8	525	530
G9	530	535

Blue

Bin Code	Min.(nm)	Max.(nm)
B3	460	465
B4	465	470
B5	470	475

- Tolerance of measurement of dominant wavelength is ±1 nm

Copyright © 2019 Cree, Inc. All rights reserved. The information in this document is subject to change without notice. Cree and the Cree logo are registered trademarks of Cree, Inc.

ORDER CODE TABLE*

C5SMF

Color	Kit Number	Luminous Intensity (mcd)		Dominant Wavelength				Package	Standoff
		Min.	Max.	Color Bin	Min. (nm)	Color Bin	Max. (nm)		
Red	C5SMF-RJF-CT0W0BB1	1100	4180	RB	619	RB	624	Bulk	Yes
Red	C5SMF-RJF-CT14QBB1	Any 4 consecutive sub-bins: T1 (1100) - U2 (1824)		RB	619	RB	624	Bulk	Yes
Red	C5SMF-RJF-CT34QBB1	Any 4 consecutive sub-bins: T3 (1310) - U4 (2130)		RB	619	RB	624	Bulk	Yes
Red	C5SMF-RJF-CU14QBB1	Any 4 consecutive sub-bins: U1 (1520) - V2 (2564)		RB	619	RB	624	Bulk	Yes
Red	C5SMF-RJE-CT0W0BB1	1100	4180	RB	619	RB	624	Bulk	No
Red	C5SMF-RJE-CT14QBB1	Any 4 consecutive sub-bins: T1 (1100) - U2 (1824)		RB	619	RB	624	Bulk	No
Red	C5SMF-RJE-CT34QBB1	Any 4 consecutive sub-bins: T3 (1310) - U4 (2130)		RB	619	RB	624	Bulk	No
Red	C5SMF-RJE-CU14QBB1	Any 4 consecutive sub-bins: U1 (1520) - V2 (2564)		RB	619	RB	624	Bulk	No
Red	C5SMF-RJF-CT0W0BB2	1100	4180	RB	619	RB	624	Ammo	Yes
Red	C5SMF-RJF-CT14QBB2	Any 4 consecutive sub-bins: T1 (1100) - U2 (1824)		RB	619	RB	624	Ammo	Yes
Red	C5SMF-RJF-CT34QBB2	Any 4 consecutive sub-bins: T3 (1310) - U4 (2130)		RB	619	RB	624	Ammo	Yes
Red	C5SMF-RJF-CU14QBB2	Any 4 consecutive sub-bins: U1 (1520) - V2 (2564)		RB	619	RB	624	Ammo	Yes
Red	C5SMF-RJE-CT0W0BB2	1100	4180	RB	619	RB	624	Ammo	No
Red	C5SMF-RJE-CT14QBB2	Any 4 consecutive sub-bins: T1 (1100) - U2 (1824)		RB	619	RB	624	Ammo	No
Red	C5SMF-RJE-CT34QBB2	Any 4 consecutive sub-bins: T3 (1310) - U4 (2130)		RB	619	RB	624	Ammo	No
Red	C5SMF-RJE-CU14QBB2	Any 4 consecutive sub-bins: U1 (1520) - V2 (2564)		RB	619	RB	624	Ammo	No

Copyright © 2019 Cree, Inc. All rights reserved. The information in this document is subject to change without notice. Cree and the Cree logo are registered trademarks of Cree, Inc.

ORDER CODE TABLE*

C5SMF

Color	Kit Number	Luminous Intensity (mcd)		Dominant Wavelength				Package	Standoff
		Min.	Max.	Color Bin	Min. (nm)	Color Bin	Max. (nm)		
Green	C5SMF-GJF-CV0Y0791	2130	8200	G7	520	G9	535	Bulk	Yes
Green	C5SMF-GJF-CW34Q7T1	Any 4 consecutive sub-bins: W3 (3590) - X4 (5860)		Any 1 color bin from G7 (520 nm) to G8 (530 nm)				Bulk	Yes
Green	C5SMF-GJF-CX14Q7T1	Any 4 consecutive sub-bins: X1 (4180) - Y2 (7030)		Any 1 color bin from G7 (520 nm) to G8 (530 nm)				Bulk	Yes
Green	C5SMF-GJE-CV0Y0791	2130	8200	G7	520	G9	535	Bulk	No
Green	C5SMF-GJE-CW34Q7T1	Any 4 consecutive sub-bins: W3 (3590) - X4 (5860)		Any 1 color bin from G7 (520 nm) to G8 (530 nm)				Bulk	No
Green	C5SMF-GJE-CX14Q7T1	Any 4 consecutive sub-bins: X1 (4180) - Y2 (7030)		Any 1 color bin from G7 (520 nm) to G8 (530 nm)				Bulk	No
Green	C5SMF-GJF-CV0Y0792	2130	8200	G7	520	G9	535	Ammo	Yes
Green	C5SMF-GJF-CW34Q7T2	Any 4 consecutive sub-bins: W3 (3590) - X4 (5860)		Any 1 color bin from G7 (520 nm) to G8 (530 nm)				Ammo	Yes
Green	C5SMF-GJF-CX14Q7T2	Any 4 consecutive sub-bins: X1 (4180) - Y2 (7030)		Any 1 color bin from G7 (520 nm) to G8 (530 nm)				Ammo	Yes
Green	C5SMF-GJE-CV0Y0792	2130	8200	G7	520	G9	535	Ammo	No
Green	C5SMF-GJE-CW34Q7T2	Any 4 consecutive sub-bins: W3 (3590) - X4 (5860)		Any 1 color bin from G7 (520 nm) to G8 (530 nm)				Ammo	No
Green	C5SMF-GJE-CX14Q7T2	Any 4 consecutive sub-bins: X1 (4180) - Y2 (7030)		Any 1 color bin from G7 (520 nm) to G8 (530 nm)				Ammo	No

Copyright © 2019 Cree, Inc. All rights reserved. The information in this document is subject to change without notice. Cree and the Cree logo are registered trademarks of Cree, Inc.

ORDER CODE TABLE*

C5SMF

Color	Kit Number	Luminous Intensity (mcd)		Dominant Wavelength				Package	Standoff
		Min.	Max.	Color Bin	Min.(nm)	Color Bin	Max. (nm)		
Blue	C5SMF-BJF-CR0U0351	550	2130	B3	460	B5	475	Bulk	Yes
Blue	C5SMF-BJF-CR0U0451	550	2130	B4	465	B5	475	Bulk	Yes
Blue	C5SMF-BJF-CT14Q3T1	Any 4 consecutive sub-bins: T1 (1100) - U2 (1824)		Any 1 color bin from B3 (460 nm) to B4 (470 nm)				Bulk	Yes
Blue	C5SMF-BJF-CT14Q4T1	Any 4 consecutive sub-bins: T1 (1100) - U2 (1824)		Any 1 color bin from B4 (465 nm) to B5 (475 nm)				Bulk	Yes
Blue	C5SMF-BJF-CT34Q3T1	Any 4 consecutive sub-bins: T3 (1310) - U4 (2130)		Any 1 color bin from B3 (460 nm) to B4 (470 nm)				Bulk	Yes
Blue	C5SMF-BJF-CT34Q4T1	Any 4 consecutive sub-bins: T3 (1310) - U4 (2130)		Any 1 color bin from B4 (465 nm) to B5 (475 nm)				Bulk	Yes
Blue	C5SMF-BJE-CR0U0351	550	2130	B3	460	B5	475	Bulk	No
Blue	C5SMF-BJE-CR0U0451	550	2130	B4	465	B5	475	Bulk	No
Blue	C5SMF-BJE-CT14Q3T1	Any 4 consecutive sub-bins: T1 (1100) - U2 (1824)		Any 1 color bin from B3 (460 nm) to B4 (470 nm)				Bulk	No
Blue	C5SMF-BJE-CT14Q4T1	Any 4 consecutive sub-bins: T1 (1100) - U2 (1824)		Any 1 color bin from B4 (465 nm) to B5 (475 nm)				Bulk	No
Blue	C5SMF-BJE-CT34Q3T1	Any 4 consecutive sub-bins: T3 (1310) - U4 (2130)		Any 1 color bin from B3 (460 nm) to B4 (470 nm)				Bulk	No
Blue	C5SMF-BJE-CT34Q4T1	Any 4 consecutive sub-bins: T3 (1310) - U4 (2130)		Any 1 color bin from B4 (465 nm) to B5 (475 nm)				Bulk	No
Blue	C5SMF-BJF-CR0U0352	550	2130	B3	460	B5	475	Ammo	Yes
Blue	C5SMF-BJF-CR0U0452	550	2130	B4	465	B5	475	Ammo	Yes
Blue	C5SMF-BJF-CT14Q3T2	Any 4 consecutive sub-bins: T1 (1100) - U2 (1824)		Any 1 color bin from B3 (460 nm) to B4 (470 nm)				Ammo	Yes
Blue	C5SMF-BJF-CT14Q4T2	Any 4 consecutive sub-bins: T1 (1100) - U2 (1824)		Any 1 color bin from B4 (465 nm) to B5 (475 nm)				Ammo	Yes
Blue	C5SMF-BJF-CT34Q3T2	Any 4 consecutive sub-bins: T3 (1310) - U4 (2130)		Any 1 color bin from B3 (460 nm) to B4 (470 nm)				Ammo	Yes
Blue	C5SMF-BJF-CT34Q4T2	Any 4 consecutive sub-bins: T3 (1310) - U4 (2130)		Any 1 color bin from B4 (465 nm) to B5 (475 nm)				Ammo	Yes
Blue	C5SMF-BJE-CR0U0352	550	2130	B3	460	B5	475	Ammo	No
Blue	C5SMF-BJE-CR0U0452	550	2130	B4	465	B5	475	Ammo	No
Blue	C5SMF-BJE-CT14Q3T2	Any 4 consecutive sub-bins: T1 (1100) - U2 (1824)		Any 1 color bin from B3 (460 nm) to B4 (470 nm)				Ammo	No
Blue	C5SMF-BJE-CT14Q4T2	Any 4 consecutive sub-bins: T1 (1100) - U2 (1824)		Any 1 color bin from B4 (465 nm) to B5 (475 nm)				Ammo	No
Blue	C5SMF-BJE-CT34Q3T2	Any 4 consecutive sub-bins: T3 (1310) - U4 (2130)		Any 1 color bin from B3 (460 nm) to B4 (470 nm)				Ammo	No
Blue	C5SMF-BJE-CT34Q4T2	Any 4 consecutive sub-bins: T3 (1310) - U4 (2130)		Any 1 color bin from B4 (465 nm) to B5 (475 nm)				Ammo	No

Copyright © 2019 Cree, Inc. All rights reserved. The information in this document is subject to change without notice. Cree and the Cree logo are registered trademarks of Cree, Inc.

ORDER CODE TABLE*

C5SME

Color	Kit Number	Luminous Intensity (mcd)		Dominant Wavelength				Package	Standoff
		Min.	Max.	Color Bin	Min.(nm)	Color Bin	Max.(nm)		
Red	C5SME-RJF-CS0U0BB1	770	2130	RB	619	RB	624	Bulk	Yes
Red	C5SME-RJF-CS34QBB1	Any 4 consecutive sub-bins: S3 (934) - T4 (1520)		RB	619	RB	624	Bulk	Yes
Red	C5SME-RJF-CT14QBB1	Any 4 consecutive sub-bins: T1 (1100) - U2 (1824)		RB	619	RB	624	Bulk	Yes
Red	C5SME-RJE-CS0U0BB1	770	2130	RB	619	RB	624	Bulk	No
Red	C5SME-RJE-CS34QBB1	Any 4 consecutive sub-bins: S3 (934) - T4 (1520)		RB	619	RB	624	Bulk	No
Red	C5SME-RJE-CT14QBB1	Any 4 consecutive sub-bins: T1 (1100) - U2 (1824)		RB	619	RB	624	Bulk	No
Red	C5SME-RJF-CS0U0BB2	770	2130	RB	619	RB	624	Ammo	Yes
Red	C5SME-RJF-CS34QBB2	Any 4 consecutive sub-bins: S3 (934) - T4 (1520)		RB	619	RB	624	Ammo	Yes
Red	C5SME-RJF-CT14QBB2	Any 4 consecutive sub-bins: T1 (1100) - U2 (1824)		RB	619	RB	624	Ammo	Yes
Red	C5SME-RJE-CS0U0BB2	770	2130	RB	619	RB	624	Ammo	No
Red	C5SME-RJE-CS34QBB2	Any 4 consecutive sub-bins: S3 (934) - T4 (1520)		RB	619	RB	624	Ammo	No
Red	C5SME-RJE-CT14QBB2	Any 4 consecutive sub-bins: T1 (1100) - U2 (1824)		RB	619	RB	624	Ammo	No

Notes:
1. The above kit numbers represent order codes that include multiple intensity-bin and color-bin codes. Only one intensity-sub-bin code and one color-bin code will be shipped on each reel. Selected single intensity-bin, single color-bin codes will be orderable in certain quantities. For example, any four consecutive sub-bins from V1 to W2 mean only one intensity bin with four sub-bins of the following brightness ranges (V1-V4, V2-W1, V3-W2) will be shipped by Cree. For example, any one-color bin from G7 to G9 means only one color bin (G7 or G8 or G9) will be shipped by Cree.
2. Please refer to the "Cree LED Lamp Reliability Test Standards" document [#1] for reliability test conditions.
3. Please refer to the "Cree LED Lamp Soldering & Handling" document [#2] for information about how to use this LED product safely.

#1: Refer to http://www.cree.com/led-components/media/documents/LED_Lamp_Reliability_Test_Standard.pdf

#2: Refer to http://www.cree.com/led-components/media/documents/sh-HB.pdf

Copyright © 2019 Cree, Inc. All rights reserved. The information in this document is subject to change without notice. Cree and the Cree logo are registered trademarks of Cree, Inc.

GRAPHS

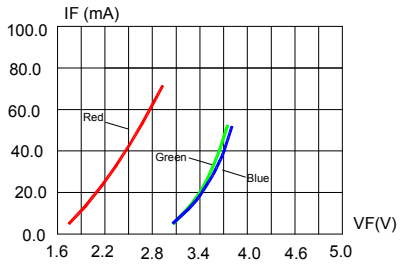

FIG.1 FORWARD CURRENT VS. FORWARD VOLTAGE.

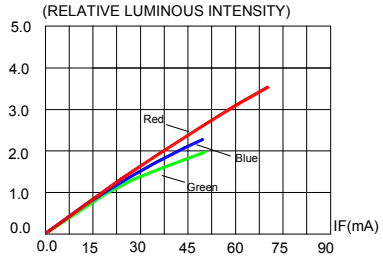

FIG.2 RELATIVE LUMINOUS INTENSITY VS. FORWARD CURRENT

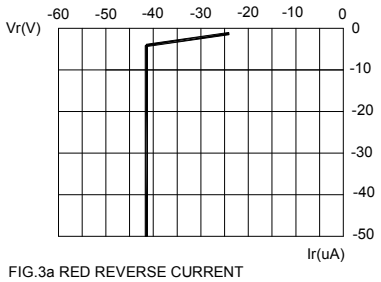

FIG.3a RED REVERSE CURRENT VS. REVERSE VOLTAGE.

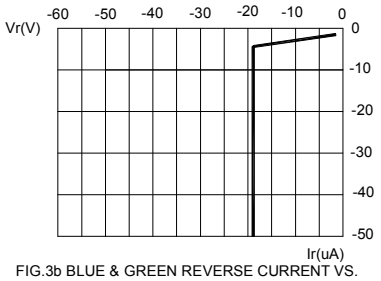

FIG.3b BLUE & GREEN REVERSE CURRENT VS. REVERSE VOLTAGE.

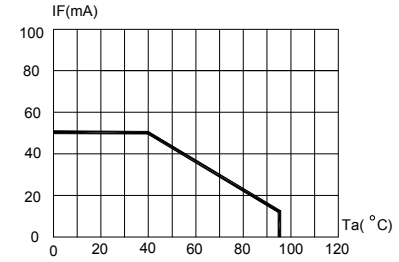

FIG.4a RED MAXIMUM FORWARD DC CURRENT VS AMBIENT TEMPERATURE (Tjmax=105 °C)

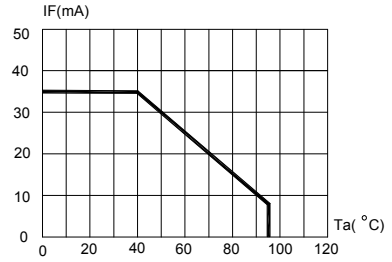

FIG.4b BLUE & GREEN MAXIMUM FORWARD DC CURRENT VS AMBIENT TEMPERATURE (Tjmax=105 °C)

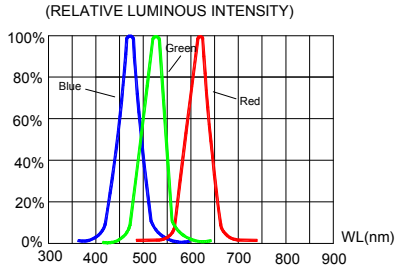

FIG.5 RELATIVE LUMINOUS INTENSITY VS. WAVELENGTH.

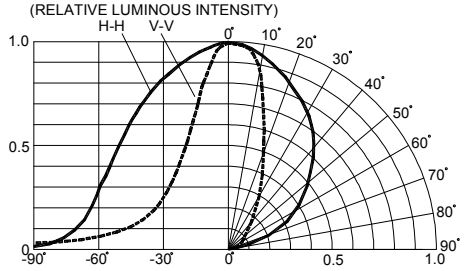

FIG.6 RED & BLUE&GREEN FAR FIELD PATTERN

The above data are collected from statistical figures that do not necessarily correspond to the actual parameters of each single LED. Hence, these data will be changed without further notice.

Copyright © 2019 Cree, Inc. All rights reserved. The information in this document is subject to change without notice. Cree and the Cree logo are registered trademarks of Cree, Inc.

MECHANICAL DIMENSIONS

All dimensions are in mm. Tolerance is ±0.25 mm unless otherwise noted.

An epoxy meniscus may extend about 1.5 mm down the leads.

Burr around bottom of epoxy may be 0.5 mm max.

C5SMF-RJF/GJF/BJF&C5SME-RJF:

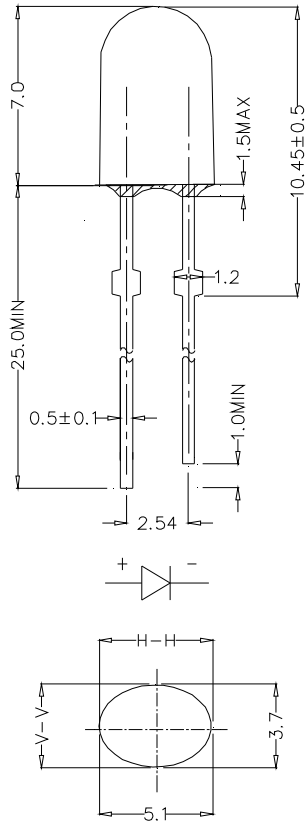

C5SMF-RJE/GJE/BJE&C5SME-RJE:

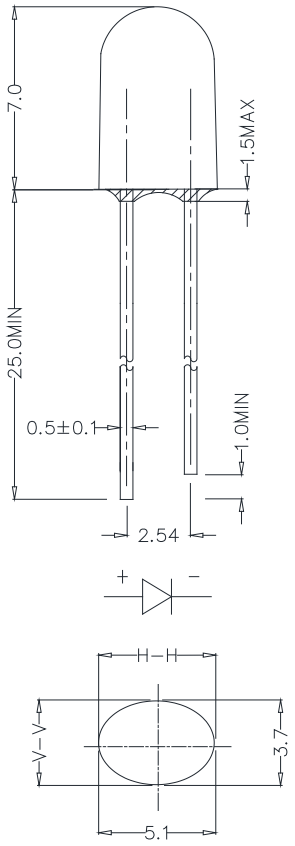

NOTES

Lead Frame Materials

Ag-plated and Lead-free Solder-plated iron.

RoHS Compliance

The levels of RoHS-restricted materials in this product are below the maximum concentration values (also referred to as the threshold limits) permitted for such substances, or are used in an exempted application in accordance with EU Directive 2011/65/EC (RoHS2), as implemented by EU member states on January 2, 2013 and amended on March 31, 2015 by EU Directive 2015/863/EU.

RoHS Declarations for this product can be obtained from your Cree representative or from the Product Ecology section of the Cree website.

Vision Advisory Claim

Users should be cautioned not to stare at the light of this LED product. The bright light can damage the eye.

Copyright © 2019 Cree, Inc. All rights reserved. The information in this document is subject to change without notice. Cree and the Cree logo are registered trademarks of Cree, Inc.

KIT NUMBER SYSTEM

All dimensions in mm.Cree LED lamps are tested and sorted into performance bins. A bin is specified by ranges of color, forward voltage, and brightness. Sorted LEDs are packaged for shipping in various convenient options. Please refer to the "Cree LED Lamp Packaging Standard" document for more information about shipping and packaging options.

Cree LEDs are sold by order codes in combinations of bins called kits. Order codes are configured in the following manner:

CCCCC - DXG - XHHKKMNT

CCCCC - Product Series

D - Color

G - Option
S : Standoff
N : No Standoff
B : Black Face
W : White Face
A : Black Body
E: Iron Lead Frame without standoff
F : Iron Lead Frame with Standoff

T - Packaging Type
1 : Bulk Pack
2 : Ammo Pack
3 : Tape & Reel (Roll Pack)
4 : Tube Pack

N - Max. Wavelength/Chromaticity Range
R : Select 1 hue from 4 hue bins
S : Select 1 hue from 3 hue bins
T : Select 1 hue from 2 hue bins
U : Select 2 hue from 4 hue bins
V : Select 2 hue from 3 hue bins

M - Min. Wavelength/Chromaticity Range
Refer to order code table

KK - Maximum Intensity Bin
Refer to order code table

HH - Minimum Intensity Bin
Refer to order code table

* Please contact our sales representative for ordering information.

Copyright © 2019 Cree, Inc. All rights reserved. The information in this document is subject to change without notice. Cree and the Cree logo are registered trademarks of Cree, Inc.

REFLOW SOLDERING

The LED soldering specification is shown below(suitable for both leaded solder & lead-free solder):

Manual Soldering		Solder Dipping	
Soldering iron	35 W max	Preheat	110 ºC max
Temperature	300 ºC max	Preheat time	60 seconds max
		Solder-bath temperature	260 ºC Max
Soldering time	3 seconds max	Dipping time	5 seconds max
Position	Not less than 3 mm from the base of the package.	Position	Not less than 3 mm from the base of the package.

• Manual soldering onto the PCB is not recommended because soldering time is uncontrollable.
• The recommended wave soldering is as below:

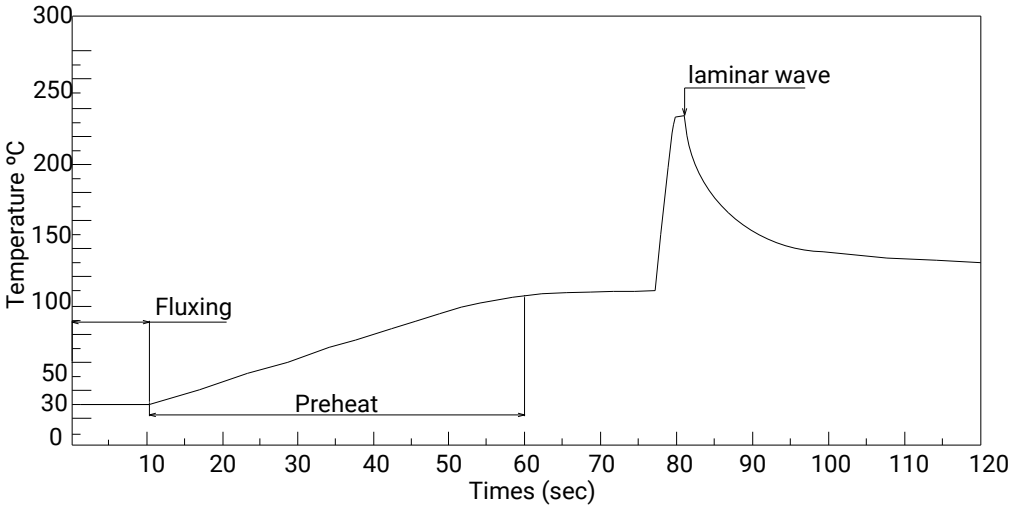

- Do not apply any stress to the LED package, particularly when heated.
- Only bottom preheat is suggested & should not preheat on top in order to reduce thermal stress experienced by the LEDs.
- The LEDs must not be re used once they have been extracted from PCB.
- After soldering the LEDs, the package should be protected from mechanical shock or vibration until the LEDs have reached 40 ºC or below.
- Precautions must be taken as mechanical stress on the LEDs may be caused by PCB warpage or from the clinching and cutting of the LED leads.
- When it is necessary to clam the LEDs during soldering, it is important to ensure no mechanical stress is exerted on the LEDs.
- Cut the LED lead at normal room temperature. Lead cutting at high temperature may cause failure of the LEDs.

Refer to "http://www.cree.com/led-components/media/documents/sh-HB.pdf" for soldering & handling details.

Copyright © 2019 Cree, Inc. All rights reserved. The information in this document is subject to change without notice. Cree and the Cree logo are registered trademarks of Cree, Inc.

PACKAGING

Features:

- The LEDs are packed in cardboard boxes after packaging in normal or anti-electrostatic bags.
- Cardboard boxes will be used to protect the LEDs from mechanical shock during transportation.
- The boxes are not water resistant, and they must be kept away from water and moisture.
- The Bulk Pack types of packaging.
- Max 500 pcs per bulk and Max 2500 pcs per ammo.

Bulk Pack Packaging Type:

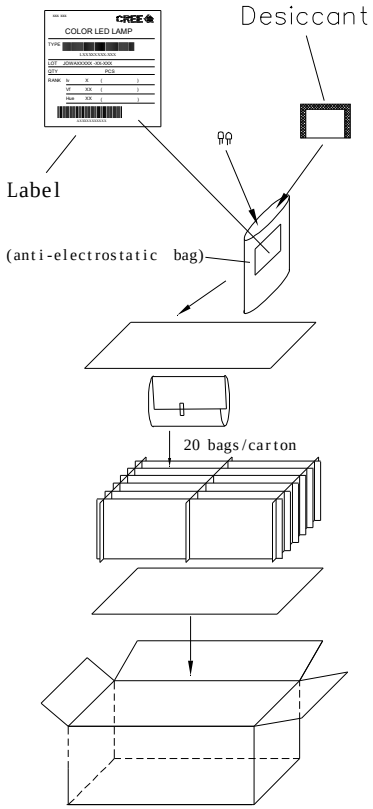

Ammo Pack Packaging Type:

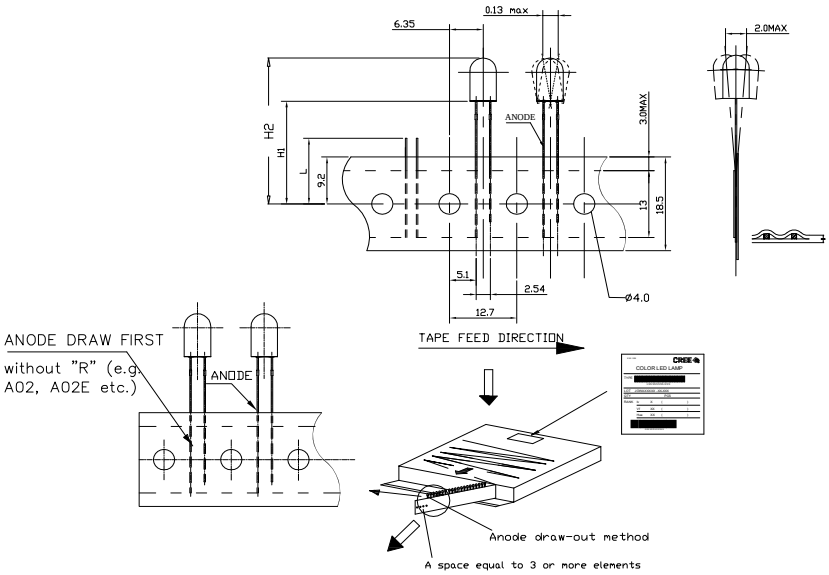

Copyright © 2019 Cree, Inc. All rights reserved. The information in this document is subject to change without notice. Cree and the Cree logo are registered trademarks of Cree, Inc.

Компания «ЭлектроПласт» предлагает заключение долгосрочных отношений при поставках импортных электронных компонентов на взаимовыгодных условиях!

Наши преимущества:

- Оперативные поставки широкого спектра электронных компонентов отечественного и импортного производства напрямую от производителей и с крупнейших мировых складов;
- Поставка более 17-ти миллионов наименований электронных компонентов;
- Поставка сложных, дефицитных, либо снятых с производства позиций;
- Оперативные сроки поставки под заказ (от 5 рабочих дней);
- Экспресс доставка в любую точку России;
- Техническая поддержка проекта, помощь в подборе аналогов, поставка прототипов;
- Система менеджмента качества сертифицирована по Международному стандарту ISO 9001;
- Лицензия ФСБ на осуществление работ с использованием сведений, составляющих государственную тайну;
- Поставка специализированных компонентов (Xilinx, Altera, Analog Devices, Intersil, Interpoint, Microsemi, Aeroflex, Peregrine, Syfer, Eurofarad, Texas Instrument, Miteq, Cobham, E2V, MA-COM, Hittite, Mini-Circuits,General Dynamics и др.);

Помимо этого, одним из направлений компании «ЭлектроПласт» является направление «Источники питания». Мы предлагаем Вам помощь Конструкторского отдела:

- Подбор оптимального решения, техническое обоснование при выборе компонента;
- Подбор аналогов;
- Консультации по применению компонента;
- Поставка образцов и прототипов;
- Техническая поддержка проекта;
- Защита от снятия компонента с производства.

Как с нами связаться

Телефон: 8 (812) 309 58 32 (многоканальный)
Факс: 8 (812) 320-02-42
Электронная почта: org@eplast1.ru
Адрес: 198099, г. Санкт-Петербург, ул. Калинина, дом 2, корпус 4, литера А.