Description

The APX823/APX824/APX825A family of supervisors provides circuit initialization and timing supervision, primarily for DSP and processor-based systems.

During power-on, $\overline{RESET}$ is asserted when supply voltage V_{CC} becomes higher than 1.1V. Thereafter, the supply voltage supervisor monitors V_{CC} and keeps $\overline{RESET}$ active as long as V_{CC} remains below the threshold voltage V_{TH-}. An internal timer delays the return of the output to the inactive state (high) to ensure proper system reset. The delay time, t_d starts after V_{CC} has risen above the threshold voltage V_{TH-}. When the supply voltage drops below the threshold voltage V_{TH-}, the output becomes active (low) again. No external components are required. All the devices of this family have a fixed-sense threshold voltage V_{TH-} set by an internal voltage divider.

The APX823/APX825A devices incorporate a manual reset input, $\overline{MR}$. A low level at $\overline{MR}$ causes $\overline{RESET}$ to become active. The APX824/APX825A devices include a high-level output RESET. APX823/APX824/APX825A have a watchdog timer that is periodically triggered by a positive or negative transition at WDI. When the supervising system fails to retrigger the watchdog circuit within the time-out interval, ttout, $\overline{RESET}$ becomes active for the time period td. This event also reinitializes the watchdog timer. Leaving WDI unconnected disables the watchdog.

In applications where the input to the WDI pin may be active (transitioning high and low) when the APX823/APX824/APX825A asserting $\overline{RESET}$ the APX823/APX824/APX825A does not return to a non-reset state when the input voltage is above Vt. The product spectrum is designed for supply voltage of 2.5V, 3V, 3.3V and 5V. The circuits are available in a SOT25 and SOT26 packages. The APX823/APX824/APX825A devices are characterized for operation over a temperature range of -40°C to 105°C.

Pin Assignments

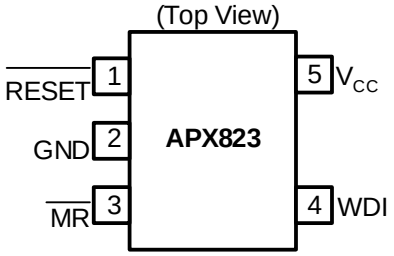

SOT25

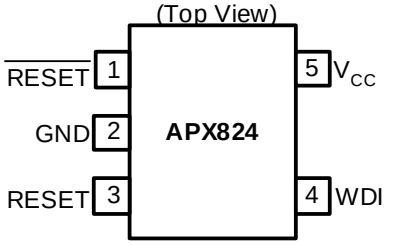

SOT25

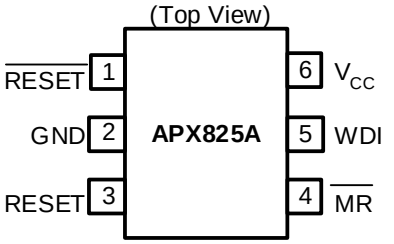

SOT26

Features

- Power-on reset generator with fixed delay time of 200ms Typ
- Manual reset input (APX823/APX825A)
- Reset output available in active-low (APX823/APX824/APX825A), active-high (APX824/APX825A)
- Supply voltage supervision range 2.5V, 3V, 3.3V, 5V
- Watchdog timer
- Supply current of 30µA (Typ.)
- Temperature range: -40°C to 85°C
- SOT25 and SOT26: Available in "Green" Molding Compound (No Br, Sb)
- Lead Free Finish/RoHS Compliant (Note 1)

Applications

- Applications Using DSPs, Microcontrollers, or Microprocessors
- Industrial Equipment
- Programmable Controls
- Automotive Systems
- Portable/Battery-Powered Equipment
- Intelligent Instruments
- Wireless Communications Systems
- Notebook/Desktop Computers

Note: 1. EU Directive 2002/95/EC (RoHS). All applicable RoHS exemptions applied, see *EU Directive 2002/95/EC Annex Notes*.

© Diodes Incorporated

Typical Application Circuit

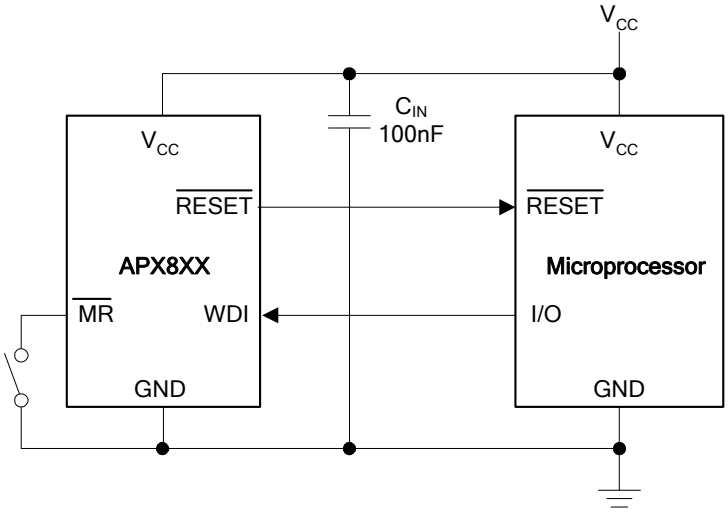

Pin Descriptions

Pin Name	Description
GND	Ground
$\overline{\text{RESET}}$ (RESET)	Reset output pin
V_{CC}	Operating voltage input
WDI	Watchdog input
$\overline{\text{MR}}$	Manual reset

Functional Block Diagram

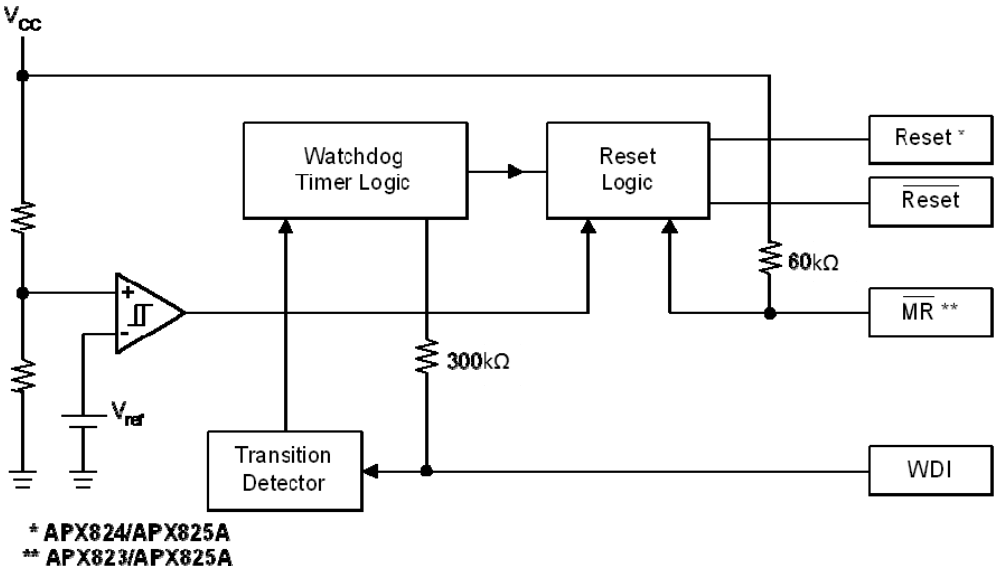

© Diodes Incorporated

Absolute Maximum Ratings (Over operating ambient temperature range, unless otherwise noted)*

Symbol	Parameter			Rating	Unit
ESD HBM	Human Body Model ESD Protection			5	KV
ESD MM	Machine Model ESD Protection			200	V
V_{CC}	Supply Voltage			6.0	V
V_{RESET}	RESET, $\overline{RESET}$, $\overline{MR}$, WDI			-0.3 to (V_{CC}+0.3)	V
I_{CC}	Input Current V_{CC}			20	mA
I_O	Maximum High Output Current			20	mA
P_D	Continuous Total Power Dissipation	Derating Factor Above $T_A = 25^oC$	SOT25	6.2	mW/°C
			SOT26	5.8	
		$T_A = 25^oC$ Power Rating	SOT25	500	mW
			SOT26	470	
		$T_A = 70^oC$ Power Rating	SOT25	220	mW
			SOT26	210	
		$T_A = 85^oC$ Power Rating	SOT25	125	mW
			SOT26	120	
T_{OP}	Operating Junction Temperature Range			-40 to 105	°C
T_{ST}	Storage Temperature Range			-65 to 150	°C

***** Stresses beyond those listed under "absolute maximum ratings" may cause permanent damage to the device. These are stress ratings only, and functional operation of the device at these or any other conditions beyond those indicated under "recommended operating conditions" is not implied. Exposure to absolute-maximum-rated conditions for extended periods may affect device reliability.

Recommended Operating Conditions

Symbol	Parameter	Min	Max	Unit
V_{CC}	Supply Voltage	1.1	5.5	V
V_{IN}	Input Voltage	0	(V_{CC}+0.3)	V
V_{IH}	High-level Input Voltage at $\overline{MR}$ and WDI	$0.7 \times V_{CC}$	-	V
V_{IL}	Low-level Voltage	-	$0.3 \times V_{CC}$	V
$\Delta t/\Delta V$	Input Transition Rise and Fall Rate at $\overline{MR}$ or WDI	-	100	ns/V
T_A	Operating Ambient Temperature Range	-40	85	^oC
T_R	V_{CC} Rising Time (V_{CC} = 0~VT)	-	100	V/ uS

© Diodes Incorporated

Electrical Characteristics (Over recommended operating ambient temperature range, unless otherwise noted)

Symbol	Parameter			Test Conditions	Min	Typ.	Max	Unit
V_{OH}	High-level Output Voltage	$\overline{RESET}$	APX823/APX824/APX825A -29/26/23	V_{CC}= V_{TH-}+0.2V I_{OH}=-20μA	0.8×V_{CC}	-	-	V
			APX823/APX824/APX825A -40/31	V_{CC}= V_{TH-}+0.2V I_{OH}=-30μA				
			APX823/APX824/APX825A –46/44	V_{CC}= V_{TH-}+0.2V I_{OH}=-120μA	V_{CC}-1.5V	-	-	V
		RESET	APX824/APX825A -29/26/23	$V_{CC} \geq$ 1.8V, I_{OH} = -100μA	0.8×V_{CC}	-	-	V
			APX824/APX825A - 46/44/40/31	$V_{CC} \geq$ 1.8V, I_{OH} = -150μA				
V_{OL}	Low-level Output Voltage	RESET	APX824/APX825A -29/26/23	V_{CC}= V_{TH-}+0.2V I_{OL}=1mA	-	-	0.4	V
			APX824/APX825A -40/31	V_{CC}= V_{TH-}+0.2V I_{OL}=1.2mA				
			APX824/APX825A -46/44	V_{CC}= V_{TH-}+0.2V I_{OL}=3mA				
		$\overline{RESET}$	APX823/APX824/APX825A - 29/26/23	V_{CC}= V_{TH-}-0.2V I_{OL}=1mA	-	-	0.4	V
			APX823/APX824/APX825A - 40/31	V_{CC}= V_{TH-}-0.2V I_{OL}=1.2mA				
			APX823/APX824/APX825A - 46/44	V_{CC}= V_{TH-}-0.2V I_{OL}=3mA				
V_{RESET}	Power-up Reset Voltage (see Note 2)			$V_{CC} \geq$ 1.1V, I_{OL}=20μA	-	-	0.4	V
V_{TH-}	Negative-going Input Threshold Voltage (see Note 3)	APX823/APX824/APX825A -23		T_A = 0°C -85°C	2.21	2.25	2.30	V
		APX823/APX824/APX825A -26			2.59	2.63	2.69	
		APX823/APX824/APX825A -29			2.88	2.93	3.00	
		APX823/APX824/APX825A -31			3.02	3.08	3.15	
		APX823/APX824/APX825A -40			3.93	4.00	4.08	
		APX823/APX824/APX825A -44			4.31	4.38	4.47	
		APX823/APX824/APX825A -46			4.56	4.63	4.72	
		APX823/APX824/APX825A -23		T_A= -40°C -85°C	2.20	2.25	2.30	V
		APX823/APX824/APX825A -26			2.57	2.63	2.69	
		APX823/APX824/APX825A -29			2.86	2.93	3.00	
		APX823/APX824/APX825A -31			3.00	3.08	3.15	
		APX823/APX824/APX825A -40			3.92	4.00	4.08	
		APX823/APX824/APX825A -44			4.29	4.38	4.47	
		APX823/APX824/APX825A -46			4.54	4.63	4.72	

Note: 2. The lowest supply voltage at which $\overline{RESET}$ becomes active. T_R , $V_{CC} \geq$ 15μs/V.
3. To ensure best stability of the threshold voltage, a bypass capacitor (ceramic, 0.1μF) should be placed near the supply terminals.

© Diodes Incorporated

Electrical Characteristics (cont.)

Symbol	Parameter		Test Conditions	Min	Typ.	Max	Unit
V_{hys}	Hysteresis at V_{CC} Input	APX823/APX824/APX825A -23		-	50	-	mV
		APX823/APX824/APX825A -26					
		APX823/APX824/APX825A -29					
		APX823/APX824/APX825A -31					
		APX823/APX824/APX825A -40		-	50	-	
		APX823/APX824/APX825A -44					
		APX823/APX824/APX825A -46					
T_S	Set-up Time	$V_{CC} = V_{TH}$ to (V_{TH} – 100mV)			20		µs
$I_{IH(AV)}$	Average High-level Input Current	WDI	WDI=V_{CC}, Time average (dc=88%)	-	120	-	µA
$I_{IL(AV)}$	Average Low-level Input Current		WDI=0.3V, V_{CC}=5.5V time average (dc=12%)	-	-15	-	µA
I_{IH}	High-level Input Current	WDI	WDI=V_{CC}	-	120	160	µA
I_{IL}	Low-level Input Current	WDI	WDI=0.3V, V_{CC}=5.5V	-	120	160	µA
I_{CC}	Supply Current	WDI and $\overline{MR}$ Unconnected, Outputs unconnected	$V_{CC} = V_{TH}$+0.2V	-	30	40	µA
	Internal Pull-up Resistor at $\overline{MR}$			-	60	-	kΩ
TC	V_{OUT} Temperature Coefficient				50	-	ppm/°C
C_i	Input Capacitance at $\overline{MR}$, WDI		V_I = 0V to 5.5V	-	5	-	pF
θ_{JA}	Thermal Resistance Junction-to-Ambient		SOT25 (Note 4)		161		°C/W
			SOT26 (Note 4)		169		
θ_{JC}	Thermal Resistance Junction-to-Case		SOT25 (Note 4)		27		°C/W
			SOT26 (Note 4)		28		

Note: 4. Test condition for SOT25 and SOT26: Devices mounted on FR-4 substrate PC board, 2oz copper, with minimum recommended pad layout.

© Diodes Incorporated

Timing Requirements (@ R_L = 1mΩ, C_L = 50pF, T_A = 25°C)

Symbol	Parameter		Test Conditions	Min	Typ.	Max	Unit
t_W	Pulse Width	at $\overline{MR}$	$V_{CC} \geq V_{TH-}$+0.2V, V_{IL}=0.3×V_{CC}, V_{IH}=0.7×V_{CC}	100	-	-	ns
		at WDI	$V_{CC} \geq V_{TH-}$+0.2V, V_{IL}=0.3×V_{CC}, V_{IH}=0.7×V_{CC}	50	-	-	ns

Switching Characteristics (@ R_L = 1mΩ, C_L = 50pF, T_A = 25°C)

Symbol	Parameter		Test Conditions	Min	Typ.	Max	Unit
t_{tout}	Watchdog Time Out	APX823/APX824/APX825A	$V_{CC} \geq V_{TH-}$+0.2V, See timing diagram	1.12	1.6	2.4	s
t_d	Delay Time	APX823/APX824/APX825A	$V_{CC} \geq V_{TH-}$+0.2V, See timing diagram	140	200	280	ms
t_{PHL}	Propagation (Delay) Time, High-to-low-level Output	$\overline{MR}$ to $\overline{RESET}$ delay (APX823/APX825A)	$V_{CC} > V_{TH-}$+0.2V, V_{IL}=0.3×V_{CC}, V_{IH}=0.7×V_{CC}	-	-	0.1	μs
		V_{CC} to $\overline{RESET}$ delay	V_{IL}= V_{TH-}-0.2V, V_{IH}= V_{TH-}+0.2V	-	-	25	μs
t_{PLH}	Propagation (Delay) Time, Low-to-high-level Output	$\overline{MR}$ to RESET delay (APX824/APX825A)	$V_{CC} > V_{TH-}$+0.2V, V_{IL}=0.3×V_{CC}, V_{IH}=0.7×V_{CC}	-	-	0.1	μs
		V_{CC} to RESET delay (APX824/APX825A)	V_{IL}= V_{TH-}-0.2V, V_{IH}= V_{TH-}+0.2V	-	-	25	μs

© Diodes Incorporated

Timing Diagram

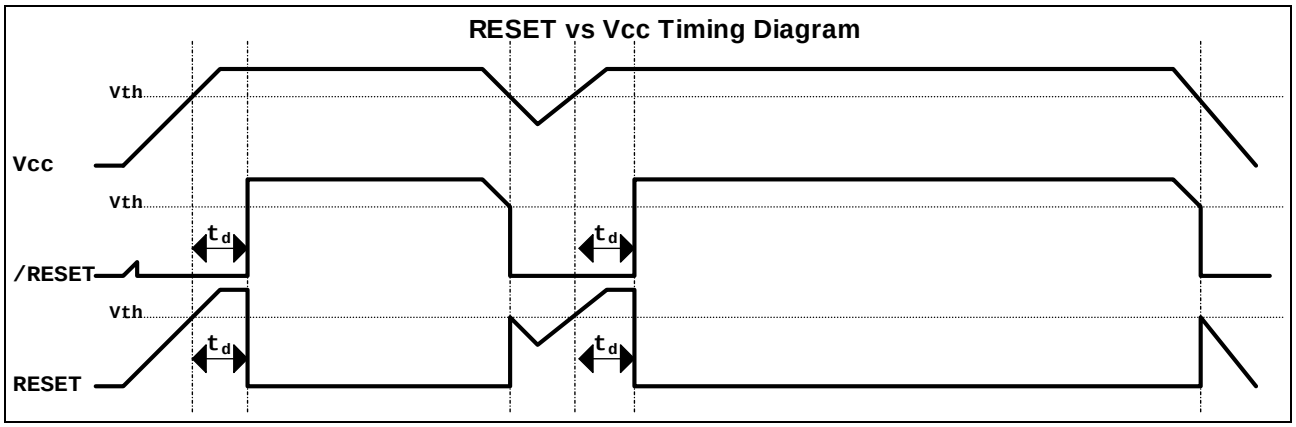

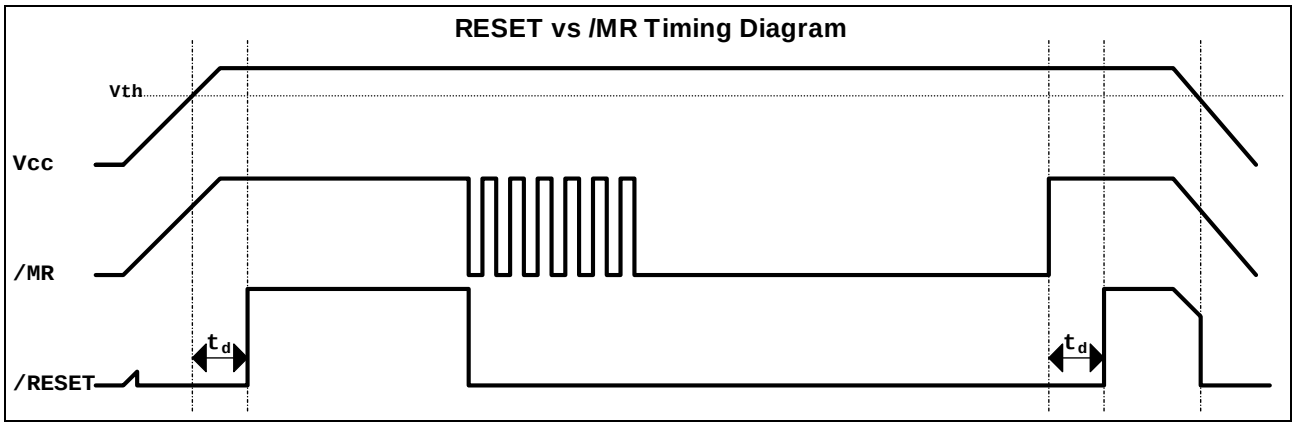

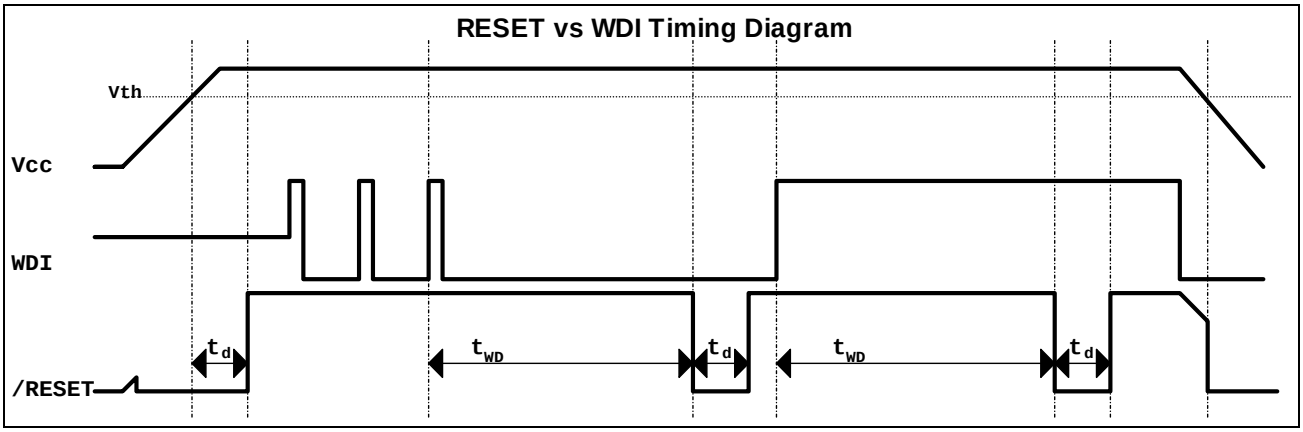

© Diodes Incorporated

Typical Characteristics

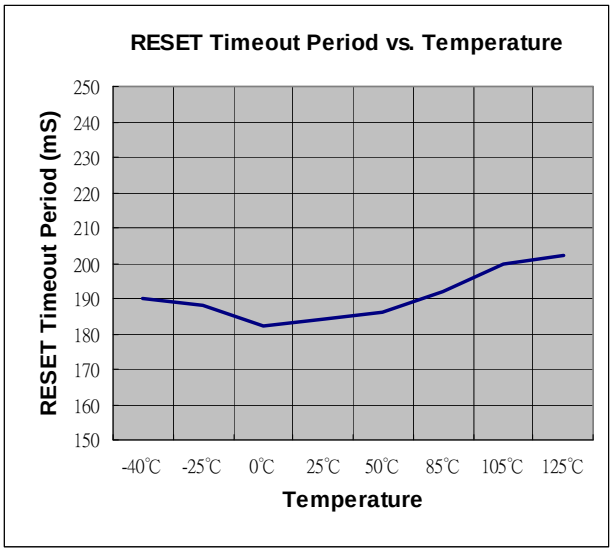

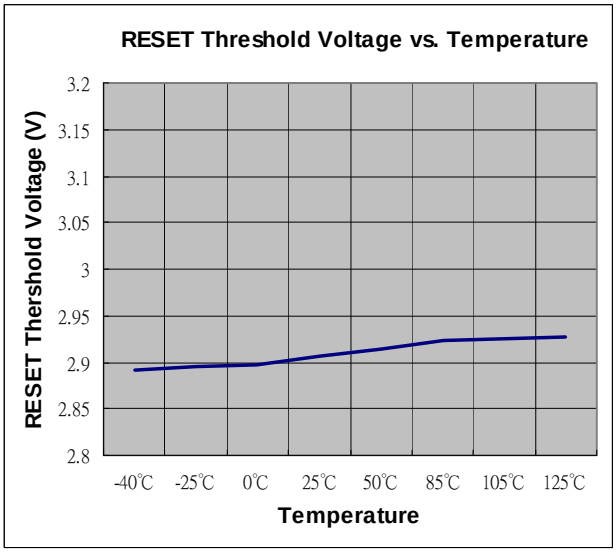

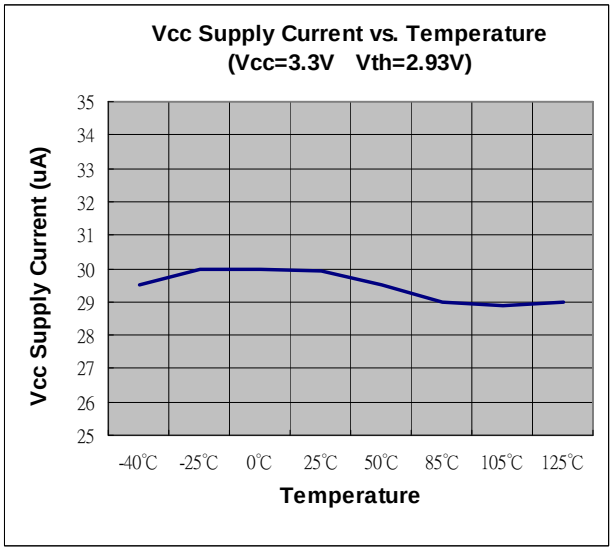

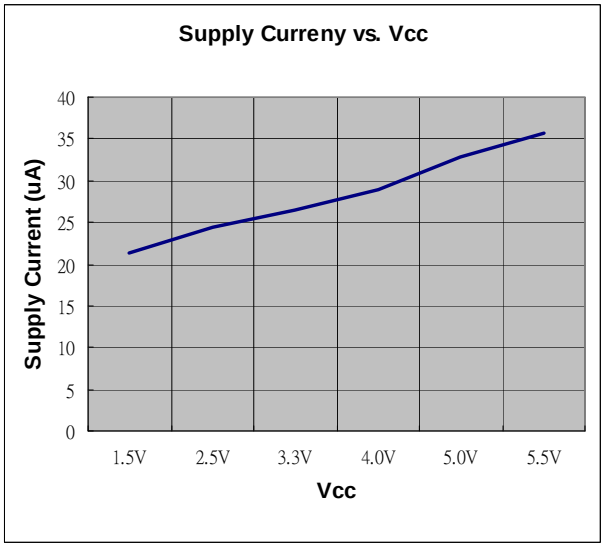

© Diodes Incorporated

Ordering Information

APX82 XX - XX XX G - 7

Part No.	Voltage	Package	Green	Packing
3 : APX823 4 : APX824 5A : APX825A	46 : 4.63 44 : 4.38 40 : 4.00 31 : 3.08 29 : 2.93 26 : 2.63 23 : 2.25	W5 : SOT25 W6 : SOT26	G : Green	7 : Tape & Reel

Device	Package Code	Packaging (Note 5)	7" Tape and Reel	
			Quantity	Part Number Suffix
APX823-XXW5G-7	W5	SOT25	3000/Tape & Reel	-7
APX824-XXW5G-7	W5	SOT25	3000/Tape & Reel	-7
APX825A-XXW6G-7	W6	SOT26	3000/Tape & Reel	-7

Notes: 5. Pad layout as shown on Diodes Inc. suggested pad layout document AP02001, which can be found on our website at http://www.diodes.com/datasheets/ap02001.pdf.

Marking Information

(1) SOT25

(Top View)

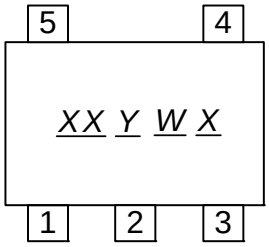

XX : Identification code
Y : Year 0~9
W : Week : A~Z : 1~26 week;
a~z : 27~52 week; z represents 52 and 53 week
X : A~Z : Green

(2) SOT26

(Top View)

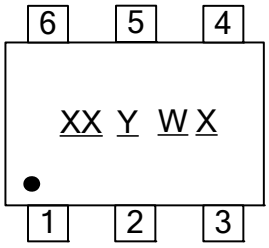

XX : Identification code
Y : Year 0~9
W : Week : A~Z : 1~26 week;
a~z : 27~52 week; z represents 52 and 53 week
X : A~Z : Green

© Diodes Incorporated

Marking Information (cont.)

Marking Table

Device	Package Type	Identification Code
APX823-46W5	SOT25	W1
APX823-44W5	SOT25	W2
APX823-40W5	SOT25	W3
APX823-31W5	SOT25	W4
APX823-29W5	SOT25	W5
APX823-26W5	SOT25	W6
APX823-23W5	SOT25	W7
APX824-46W5	SOT25	T2
APX824-44W5	SOT25	T3
APX824-40W5	SOT25	T4
APX824-31W5	SOT25	T5
APX824-29W5	SOT25	T6
APX824-26W5	SOT25	T7
APX824-23W5	SOT25	T8
APX825A-46W6	SOT26	T9
APX825A-44W6	SOT26	TA
APX825A-40W6	SOT26	TB
APX825A-31W6	SOT26	TC
APX825A-29W6	SOT26	TD
APX825A-26W6	SOT26	TE
APX825A-23W6	SOT26	TF

Package Outline Dimensions (All Dimensions in mm)

(1) Package Type: SOT25

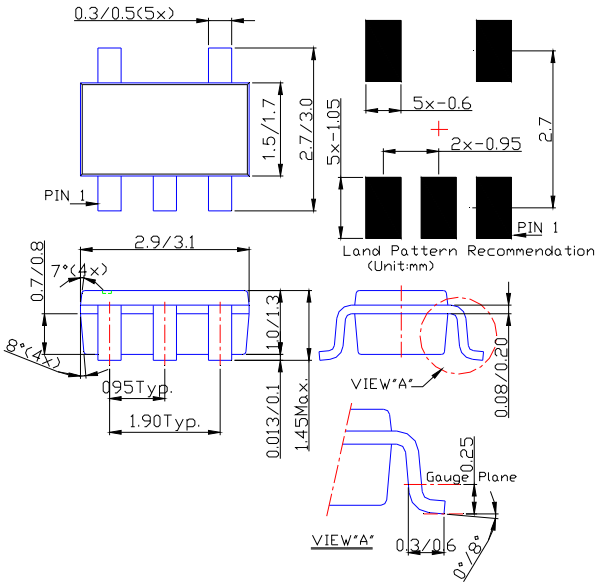

© Diodes Incorporated

Package Outline Dimensions (cont.) (All Dimensions in mm)

(2) Package Type: SOT26

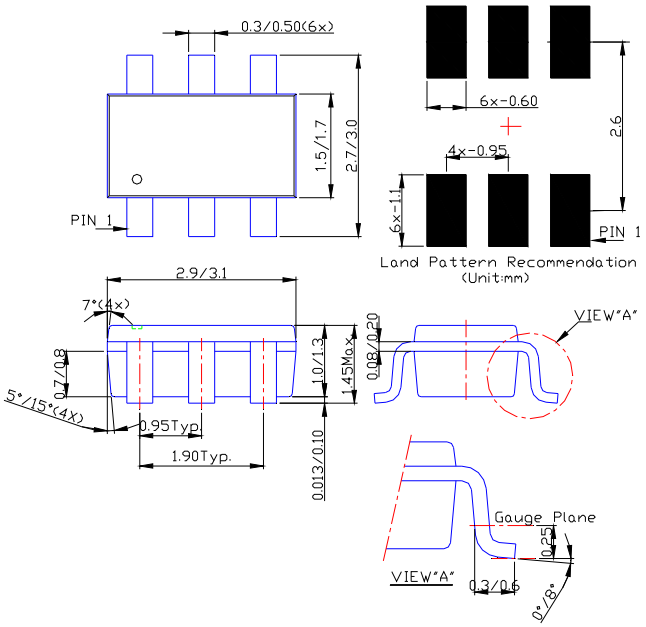

Notes: 6. Package outline dimensions as shown on Diodes Inc. package outline dimensions document AP02002, which can be found on our website at http://www.diodes.com/datasheets/ap02002.pdf

© Diodes Incorporated

IMPORTANT NOTICE

DIODES INCORPORATED MAKES NO WARRANTY OF ANY KIND, EXPRESS OR IMPLIED, WITH REGARDS TO THIS DOCUMENT, INCLUDING, BUT NOT LIMITED TO, THE IMPLIED WARRANTIES OF MERCHANTABILITY AND FITNESS FOR A PARTICULAR PURPOSE (AND THEIR EQUIVALENTS UNDER THE LAWS OF ANY JURISDICTION).

Diodes Incorporated and its subsidiaries reserve the right to make modifications, enhancements, improvements, corrections or other changes without further notice to this document and any product described herein. Diodes Incorporated does not assume any liability arising out of the application or use of this document or any product described herein; neither does Diodes Incorporated convey any license under its patent or trademark rights, nor the rights of others. Any Customer or user of this document or products described herein in such applications shall assume all risks of such use and will agree to hold Diodes Incorporated and all the companies whose products are represented on Diodes Incorporated website, harmless against all damages.

Diodes Incorporated does not warrant or accept any liability whatsoever in respect of any products purchased through unauthorized sales channel.
Should Customers purchase or use Diodes Incorporated products for any unintended or unauthorized application, Customers shall indemnify and hold Diodes Incorporated and its representatives harmless against all claims, damages, expenses, and attorney fees arising out of, directly or indirectly, any claim of personal injury or death associated with such unintended or unauthorized application.

Products described herein may be covered by one or more United States, international or foreign patents pending. Product names and markings noted herein may also be covered by one or more United States, international or foreign trademarks.

LIFE SUPPORT

Diodes Incorporated products are specifically not authorized for use as critical components in life support devices or systems without the express written approval of the Chief Executive Officer of Diodes Incorporated. As used herein:

A. Life support devices or systems are devices or systems which:

1. are intended to implant into the body, or

2. support or sustain life and whose failure to perform when properly used in accordance with instructions for use provided in the labeling can be reasonably expected to result in significant injury to the user.

B. A critical component is any component in a life support device or system whose failure to perform can be reasonably expected to cause the failure of the life support device or to affect its safety or effectiveness.

Customers represent that they have all necessary expertise in the safety and regulatory ramifications of their life support devices or systems, and acknowledge and agree that they are solely responsible for all legal, regulatory and safety-related requirements concerning their products and any use of Diodes Incorporated products in such safety-critical, life support devices or systems, notwithstanding any devices- or systems-related information or support that may be provided by Diodes Incorporated. Further, Customers must fully indemnify Diodes Incorporated and its representatives against any damages arising out of the use of Diodes Incorporated products in such safety-critical, life support devices or systems.

Copyright © 2011, Diodes Incorporated

www.diodes.com

Компания «ЭлектроПласт» предлагает заключение долгосрочных отношений при поставках импортных электронных компонентов на взаимовыгодных условиях!

Наши преимущества:

- Оперативные поставки широкого спектра электронных компонентов отечественного и импортного производства напрямую от производителей и с крупнейших мировых складов;
- Поставка более 17-ти миллионов наименований электронных компонентов;
- Поставка сложных, дефицитных, либо снятых с производства позиций;
- Оперативные сроки поставки под заказ (от 5 рабочих дней);
- Экспресс доставка в любую точку России;
- Техническая поддержка проекта, помощь в подборе аналогов, поставка прототипов;
- Система менеджмента качества сертифицирована по Международному стандарту ISO 9001;
- Лицензия ФСБ на осуществление работ с использованием сведений, составляющих государственную тайну;
- Поставка специализированных компонентов (Xilinx, Altera, Analog Devices, Intersil, Interpoint, Microsemi, Aeroflex, Peregrine, Syfer, Eurofarad, Texas Instrument, Miteq, Cobham, E2V, MA-COM, Hittite, Mini-Circuits,General Dynamics и др.);

Помимо этого, одним из направлений компании «ЭлектроПласт» является направление «Источники питания». Мы предлагаем Вам помощь Конструкторского отдела:

- Подбор оптимального решения, техническое обоснование при выборе компонента;
- Подбор аналогов;
- Консультации по применению компонента;
- Поставка образцов и прототипов;
- Техническая поддержка проекта;
- Защита от снятия компонента с производства.

Как с нами связаться

Телефон: 8 (812) 309 58 32 (многоканальный)
Факс: 8 (812) 320-02-42
Электронная почта: org@eplast1.ru
Адрес: 198099, г. Санкт-Петербург, ул. Калинина, дом 2, корпус 4, литера А.