Versatile Power Entry Module with Small Footprint

P Series

UL Recognized
CSA Certified
VDE Approved

PS non-filtered *PE filtered* *PS filtered*

P Series

The P series CHAMELEON power entry module offers the most popular features in a small footprint design

As the first 10A module to provide all five power entry functions in one compact design, the chameleon module readily adapts to its environment and the needs of international markets.

- Snap-in or flange mounting
- Standard IEC 60321-1 C14 power inlet
- Both North American and metric fusing capabilities
- Two voltage selection options (for 4-voltage selection, see the M, L or LA Series)
- Optional DPST on/off switch
- Filter options for general purpose, medical and high-performance EMI filtering

The CHAMELEON module's compact design and modular construction allows selection of the required power entry feature — without altering the panel cutout. And the CHAMELEON module, with its optional adapters, will fit several common panel cutouts.

Filter Types

The CHAMELEON module has four filter and one non-filtered option:

S models provide an extended performance two element circuit EMI filter, with attenuation similar to the EEB Series power inlet filter. It offers protection for general purpose applications with stray Line to Ground and Line to Line noise that must be attenuated at the power inlet. These filters have limited leakage current and are available in current ratings of 3, 6 and 10A.

H models provide susceptibility protection with minimal leakage current, and are suitable for patient care and non-patient care medical equipment.

L models feature a high performance medical filter designed to help bring most digital equipment (including switching power supplies) into compliance with EN55022, Level B (as well as FCC part 15J, Class B) conducted emissions limits. They are available with current ratings of 6 and 10A. These high performance versions are only available with mounting ears, single voltage selection, in a complete RFI shield with options for switch, fuses and current ratings. Mounting extenders are not compatible with the L or Z models.

Z models provide a high performance three element differential mode circuit filter, with extended EMI attenuation similar to the M Series Z models, to help bring most digital equipment (including switching power supplies) into compliance with EN55022, Level B (as well as FCC Part 15J, Class B) conducted emissions limits. They are available with current ratings of 6 and 10A. These high performance versions are only available with mounting ears, single voltage selection, in a complete RFI shield with options for switch, fuses and current ratings. Mounting extenders are not compatible with the L or Z models. For minimum depth behind the panel, see the M Series

B models are non-filtered and incorporate an interconnection block. The block connects the voltage selection terminals of an unfiltered CHAMELEON module with an IEC connector and an optional switch to reduce external wiring. Compatible with the A or B RFI shield options.

Dimensions are in inches and millimeters unless otherwise specified. Values in italics are metric equivalents. Dimensions are shown for reference purposes only. Specifications subject to change.

For email, phone or live chat, please go to
te.com/help
corcom.com

P Series

Ordering Information

Part numbers are constructed by selecting the alphanumeric character which represents the desired feature.
Note: For any option where shown as "0" use the digit ZERO (0) not the letter (O).

	Mounting Style	Extender Options[1]	Switch Options*	Voltage Select[2]	Fuse Options	Filter Type	Filter Current	Shield Options[1]
P	**S**	**J**	**0**	**X**	**S**	**S**	**6**	**0**

Mounting Style
E = Mounting ears (Horizontal axis)
S = Snap-in
M = Mounting ears (Vertical axis)

Switch Option
0 = Blank
S = Double pole single throw (DPST)

Fuse Options
D = Dual fuse
S = Single fuse

Filter Current
0 = No filter
3 = 3A
6 = 6A
X = 10A

Extender Option
0 = None
C = FN260
J = J Series
L = L Series[1]

Input Voltage Select
0 = Single voltage
S = Dual voltage[2] select (SMPS)
X = Dual voltage[2] select (series/parallel)

Filter Type
0 = No filter
B = Interconnection block[3]
H = Medical Filter
L = High Performance Medical[4]
S = General purpose
Z = High Performance[4]

Shield Options
0 = No shield
A = Filter shield
B = Complete Shield
C = Complete can (for L & Z models)

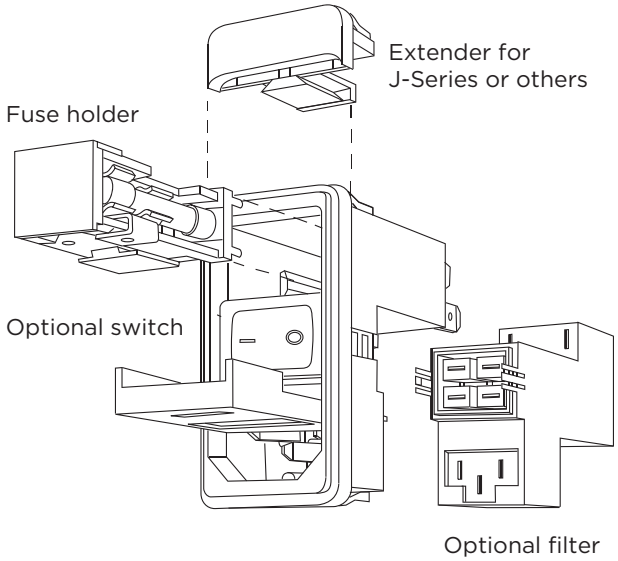

Notes:

1 L Series extender cannot be added to units with a shield. No style of extender can be added to units with B or C shields.

2 Dual voltage options are not available with L or Z Filter Types

3 When using the interconnection block, the last 3 digits of the part number are BX (0, A, or B)

4 High performance versions (L or Z filter types) are available with any switch or fuse option but only in 6 or 10A with horizontal (PE) or vertical (PM) mounting ears, single voltage (0), complete shield (C) and no extenders

* For alternative switch orientation options, please contact technical support or your Corcom product sales representative

The part number **PS0SXSS6B** would represent:

P Series (P) with a snap-in mount (S) with no extender (0) a switch (S) dual voltage select (X) single fusing (S) general purpose filter (S) for 6A (6) with a B shield (B)

Dimensions are in inches and millimeters unless otherwise specified. Values in italics are metric equivalents. Dimensions are shown for reference purposes only. Specifications subject to change.

For email, phone or live chat, please go to
te.com/help
corcom.com

P Series

Voltage Selection

P series power entry modules include the voltage selector integral with the fuse holder. Three voltage selection options are each supported by one of three different fuse holders. The fifth digit of the part number specifies which of the three fuse holders is included to provide the desired voltage selection. The single voltage fuse holder (option "0") has no voltage indication markings. The dual voltage options select 115V or 230V by removing the fuse holder, flipping it over, and reinstalling it. Voltage selection is indicated through a window in the P Series door. The "SMPS" fuse holder (option "S") jumpers two independent P Series terminals to indicate 230V operation to a switching mode power supply. The "PRSR" parallel/serial fuse holder (option "X") connects the windings of the equipment's dual primary transformer (not included) to step down the voltage or double up the current. The markings on the voltage selection fuse holders also remind the user to install the appropriate fuse for the current at the selected voltage.

Input Voltage Selection Schemes

S - "SPMS" Jumper Type

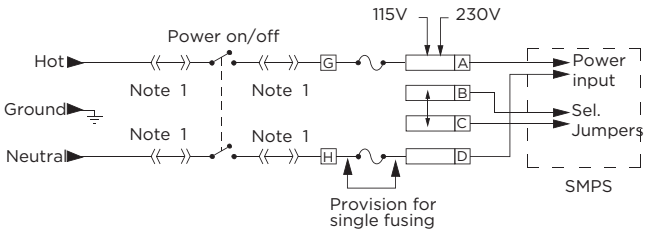

X - "PRSR" Parallel / Serial Type for Dual Primary Transformer

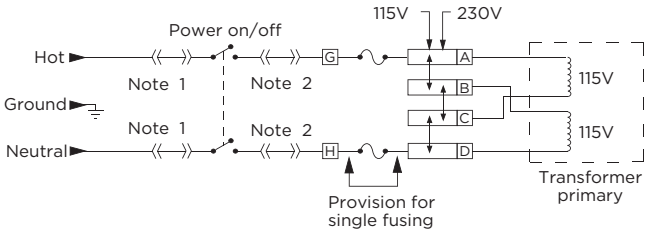

Note 1: Additional jumper wiring is required if a filter or interconnection module is not used.
Note 2: Location of optional filter. Additional jumper wiring is required if a filter or interconnection block is not used.

Shield Options

The P series offers several RF shield options. The metal shield, optional on S, H and B filtered models, provides shielding from radiated emissions and provides an RF ground for the filter to the panel. This shield is available in two versions; a shield of the filter components (designated by an A as the final digit) and a complete shield (designated by B as the final digit).

The A shield covers the filter portion of the module and increases performance of the filter by protecting the components from RFI coupling. This shield allows the use of the C or J extender.

The B shield covers the entire power entry module with metal, protecting the filter from RFI coupling, and covering the mounting cut-out to block RFI entering or leaving the equipment. The B shield cannot be used with any extender.

A complete metal enclosure is integral to both the high performance L and Z models, and must be specified by a C in the part number's final digit. This option is only available with the L or Z models.

"A" Shield

"B" Shield

Dimensions are in inches and millimeters unless otherwise specified. Values in italics are metric equivalents. Dimensions are shown for reference purposes only. Specifications subject to change.

For email, phone or live chat, please go to
te.com/help
corcom.com

P Series

Fuseholder

Another feature of the P series power entry module is the versatile fusing arrangement. The fuse holder can hold two 1/4" x 1-1/4" (3AG) or 5 x 20mm (metric) fuses. Single fusing is supported with a conversion clip that shorts one of the two fuse positions, and is designated by an S in the sixth part number digit. A module designated for a single fuse may be reconfigured by the manufacturer or the user to accept two fuses by simply removing the shorting clip. For applications intended for dual fusing, specify a D in the sixth part number digit.

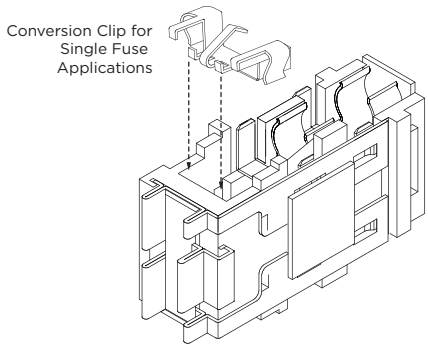

Interconnection Block

Installation of the unfiltered versions of the P series requires wiring of the IEC socket terminals to the optional switch and the switch to the fuse holder. Labor can be eliminated by ordering the module with an interconnection block. This feature, designated by "BX" in the seventh and eighth digits, pre wires the module so that only connection to the equipment must be done during installation. The interconnection block includes a plastic case to prevent access to the internal connections.

The dimensions of this alternative are the same as the filtered versions.

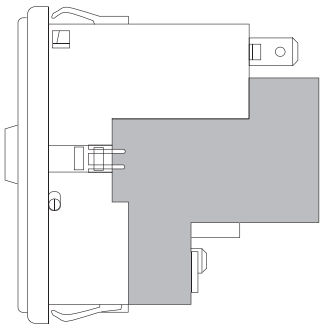

Accessories

GA400: NEMA 5-15P to IEC 60320-1 C-13 line cord

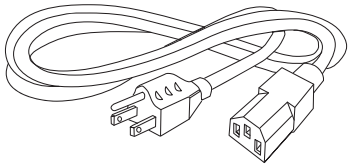

PA100: Power interconnect assembly
For voltage select models. Designed for use with either filtered or non-filtered units, 6" wire leads

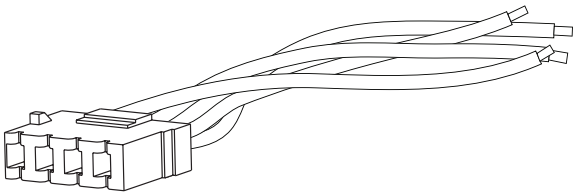

PA101: Plug only

PA102: Pins only for use with PA101

PA105: Same as PA100 but with two wires for units with no voltage selection

PA400: J Extender
Extends P Series height to fit J panel cutout

PA410: L Extender
Extends P Series width to fit L panel cutout

PA420: C Extender
Extends P Series height to fit C panel cutout

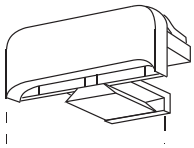

PA400
J Series Extender

C & L Extenders can not be used with B Shields.

L Extender can not be used with shields

Dimensions are in inches and millimeters unless otherwise specified. Values in italics are metric equivalents. Dimensions are shown for reference purposes only. Specifications subject to change.

For email, phone or live chat, please go to
te.com/help
corcom.com

P Series

Specifications

Maximum leakage current each Line to Ground:

	H & L Models	S & Z Models
@ 120 VAC 60 Hz:	2 µA	.25 mA
@ 250 VAC 50 Hz:	5 µA	.50 mA

Hipot rating (one minute):
Line to Ground: 2250 VDC
Line to Line: 1450 VDC

Rated Voltage(max.): 250VAC

Operating Voltages:
Selectable or Fixed 115/230 VAC

Operating Frequency: 50/60 Hz

Rated Current: Non-Filtered – 10A
Filtered – 3, 6 or 10A

Fuseholder: Accepts one or two fuses .25 x 1.25"(not included) or 5 x 20mm (not included)

Switch: DPST
10,000 operations at 51A max. inrush

Electrical Schematics

H Model

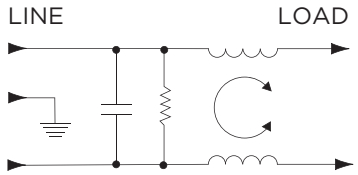

S Model

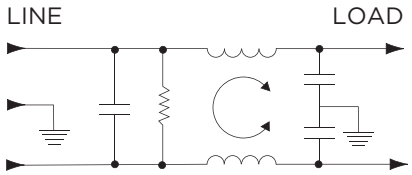

L Model

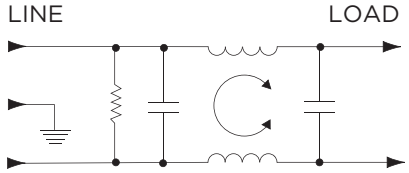

Z Model

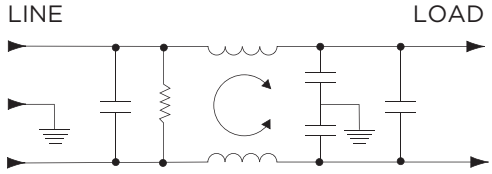

Case Styles

Front View

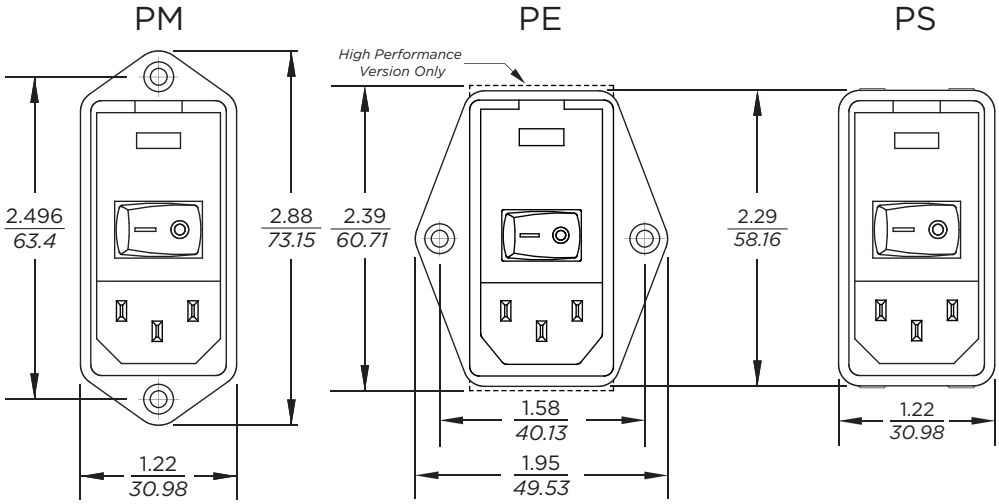

Typical Dimensions:

Line Inlet (1):	IEC 60320-1 C14
Mounting holes (2):	.135 [*3.43*] Dia. with .23 [*5.9*] Dia. x 82° countersink for #4 flathead screw (PM, PE only)

Dimensions are in inches and millimeters unless otherwise specified. Values in italics are metric equivalents. Dimensions are shown for reference purposes only. Specifications subject to change.

For email, phone or live chat, please go to
te.com/help
corcom.com

P Series

Case Styles *(continued)*

Extender Options

C Extender - FN260

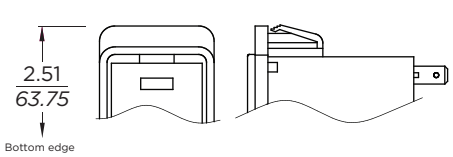

J Extender - J Series

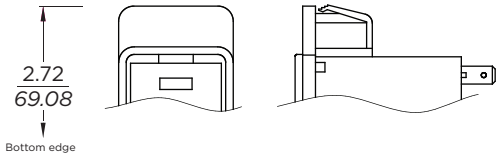

Standard Models - Side and Rear View

Non-Filtered

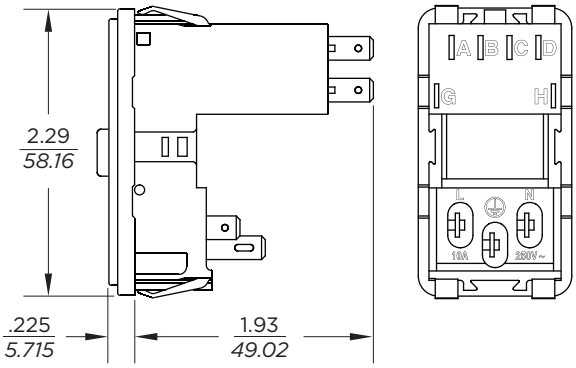

Filtered

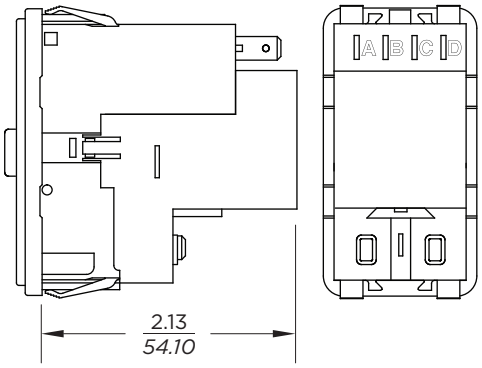

Typical Dimensions:

Terminals:	.187 [*4.8*] with .055 [*1.4*] Dia. hole. Recommended for use with mating connectors - no solder
Ground Terminal (1):	.187 [*4.8*] with .112 x .06 [*2.8 x 1.5*] slot. Recommended for use with mating connectors - no solder

High Performance Models - Side and Rear View

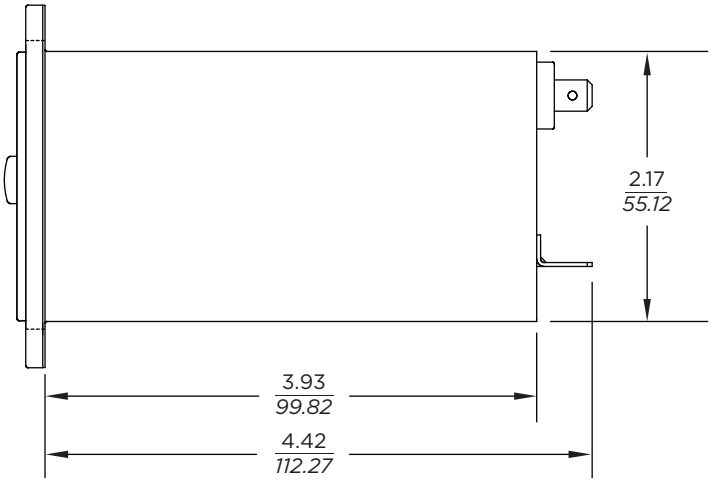

PM

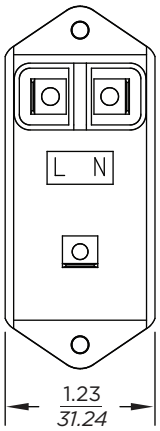

PE

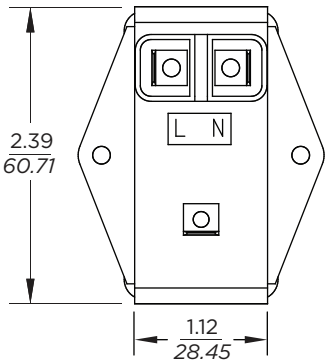

Typical Dimensions:

Terminals:	.250 [*6.4*] with .07 [*1.8*] Dia. hole. Recommended for use with mating connectors - no solder
Ground Terminal (1):	.250 [*6.4*] with .16 x .07 [*4.1 x 1.8*] slot. Recommended for use with mating connectors - no solder

Dimensions are in inches and millimeters unless otherwise specified. Values in italics are metric equivalents. Dimensions are shown for reference purposes only. Specifications subject to change.

For email, phone or live chat, please go to
te.com/help
corcom.com

P Series

Case Styles *(continued)*

Shield Options

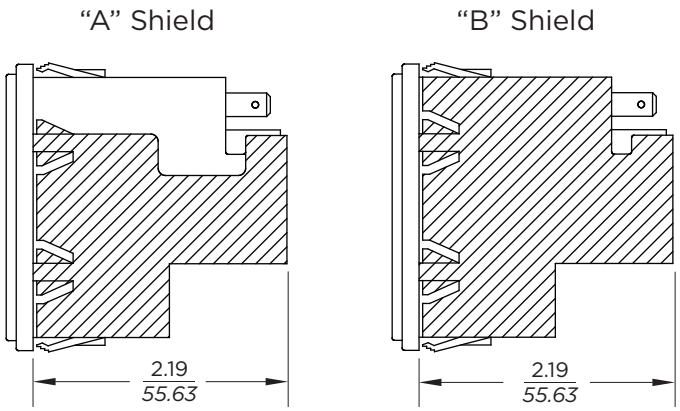

Note: Shields can only be used with filtered models. B shield may not be used with J or C extender

Recommended Panel Cutout

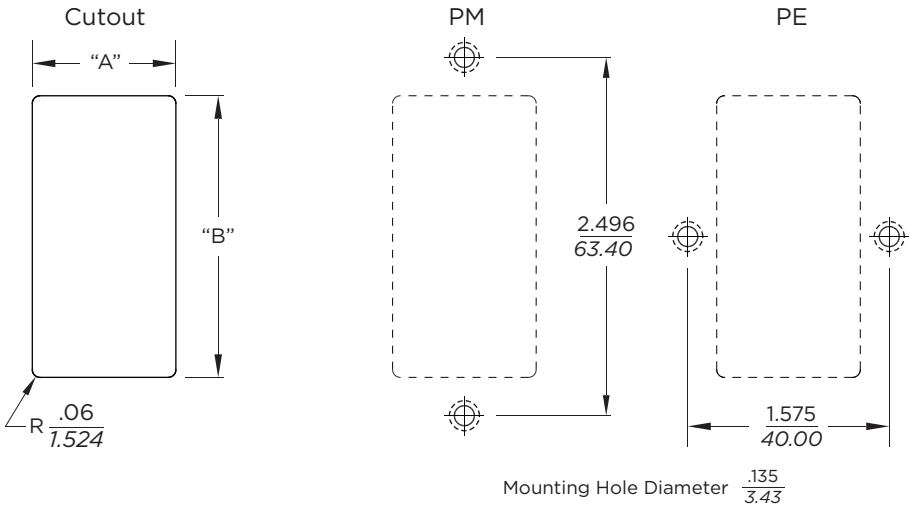

Note: For snap-in applications, the "A" sides must have a .020 [.508] radius on the installation side.
Dimensions are for front mount applications. Rear mount dimensions should be determined based on customer's application parameters. Snap-in models allow for front mounting only. Not recommended for use in plastic panels.

Style	Dimension "A" +.008 - .000			Dimension "B" +.008 - .000	
	No Shield	Shielded	High Performance	Standard	High Performance
PM	1.06 [*26.92*]	1.12 [*28.45*]	1.12 [*28.45*]	2.13 [*54.10*]	2.201 [*55.91*]
PE	1.12 [*28.45*]	1.12 [*28.45*]	1.15 [*29.21*]	2.201 [*55.91*]*	2.201 [*55.91*]
PS	1.06 [*26.92*]	1.12 [*28.45*]	-	2.201 [*55.91*]*	-
PSC	1.06 [*26.92*]	1.12 [*28.45*]	-	2.52 [*64.01*]	-
PSJ	1.06 [*26.92*]	1.12 [*28.45*]	-	2.60 [*66.04*]	-
PSL	1.12 [*28.45*]	-	-	2.201 [*55.91*]*	-

**For panel thickness of 0.031 - 0.079 [0.787 - 2.01] only. Use 2.213 [56.21] for panel thickness of 0.083 - 0.114 [2.0 - 2.90]*

Dimensions are in inches and millimeters unless otherwise specified. Values in italics are metric equivalents. Dimensions are shown for reference purposes only. Specifications subject to change.

For email, phone or live chat, please go to
te.com/help
corcom.com

P Series

Performance Data

Typical Insertion Loss

Measured in closed 50 Ohm system

Common Mode / Asymmetrical (L-G)
Differential Mode / Symmetrical (L-L)

S Models

3A

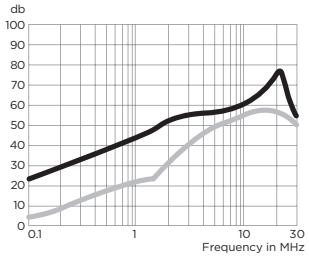

6A

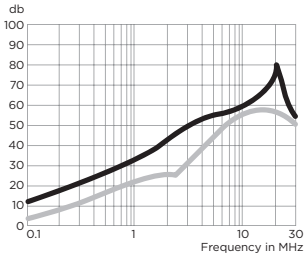

10A

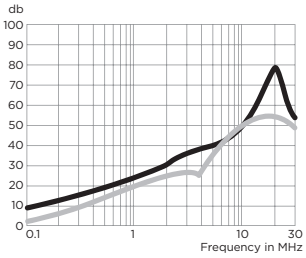

H Models

3A

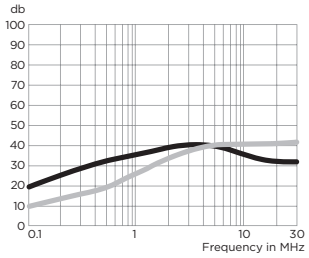

6A

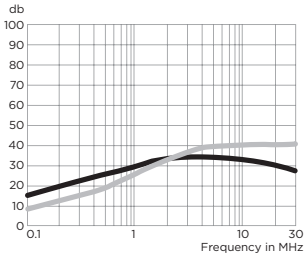

10A

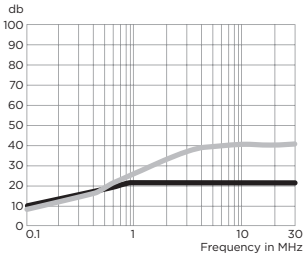

L Models

6A

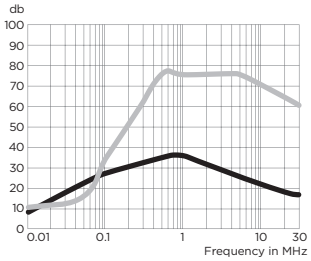

10A

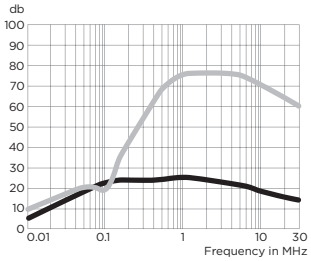

Z Models

6A

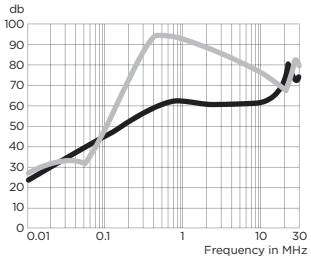

10A

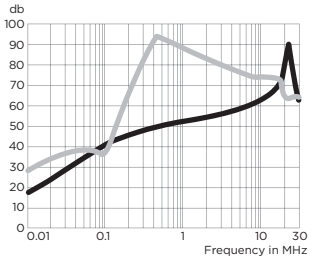

Dimensions are in inches and millimeters unless otherwise specified. Values in italics are metric equivalents. Dimensions are shown for reference purposes only. Specifications subject to change.

For email, phone or live chat, please go to
te.com/help
corcom.com

P Series

Minimum Insertion Loss

Measured in closed 50 Ohm system

Common Mode / Asymmetrical (Line to Ground)

Current Rating	Frequency – MHz .03	.1	.15	.5	1	3	5	10	30
S Models									
3A	7	17	21	27	33	40	44	50	32
6A	-	8	12	17	23	32	36	44	30
10A	-	3	5	10	13	23	27	35	27
H Models									
3A	7	17	21	27	30	29	26	23	15
6A	-	8	11	15	17	19	18	16	13
10A	3	5	8	10	12	11	11	10	10

Differential Mode / Symmetrical (Line to Line)

Current Rating	Frequency – MHz .10	.15	.5	1	3	5	10	30
S Models								
3A	2	4	12	15	30	48	50	45
6A	2	4	12	15	22	42	55	45
10A	2	4	12	15	22	42	55	45
H Models								
3A	2	4	12	18	31	40	48	41
6A	2	4	12	16	26	35	40	35
10A	2	4	12	16	26	33	40	32

Current Rating	Frequency – MHz .01	.05	.1	.15	.5	1	5	10	30
L Models									
6A	8	21	27	29	34	35	25	21	16
10A	5	17	22	23	24	25	21	18	14
Z Models									
6A	8	21	27	30	37	43	49	52	42
10A	5	17	22	24	27	32	52	47	40

Current Rating	Frequency – MHz .01	.05	.1	.15	.5	1	5	10	30
L Models									
6A	10	15	34	44	75	75	75	70	60
10A	10	20	20	35	67	75	75	70	60
Z Models									
6A	10	15	34	44	75	75	75	70	60
10A	10	20	20	35	67	75	75	70	60

Dimensions are in inches and millimeters unless otherwise specified. Values in italics are metric equivalents. Dimensions are shown for reference purposes only. Specifications subject to change.

For email, phone or live chat, please go to
te.com/help
corcom.com

Компания «ЭлектроПласт» предлагает заключение долгосрочных отношений при поставках импортных электронных компонентов на взаимовыгодных условиях!

Наши преимущества:

- Оперативные поставки широкого спектра электронных компонентов отечественного и импортного производства напрямую от производителей и с крупнейших мировых складов;
- Поставка более 17-ти миллионов наименований электронных компонентов;
- Поставка сложных, дефицитных, либо снятых с производства позиций;
- Оперативные сроки поставки под заказ (от 5 рабочих дней);
- Экспресс доставка в любую точку России;
- Техническая поддержка проекта, помощь в подборе аналогов, поставка прототипов;
- Система менеджмента качества сертифицирована по Международному стандарту ISO 9001;
- Лицензия ФСБ на осуществление работ с использованием сведений, составляющих государственную тайну;
- Поставка специализированных компонентов (Xilinx, Altera, Analog Devices, Intersil, Interpoint, Microsemi, Aeroflex, Peregrine, Syfer, Eurofarad, Texas Instrument, Miteq, Cobham, E2V, MA-COM, Hittite, Mini-Circuits,General Dynamics и др.);

Помимо этого, одним из направлений компании «ЭлектроПласт» является направление «Источники питания». Мы предлагаем Вам помощь Конструкторского отдела:

- Подбор оптимального решения, техническое обоснование при выборе компонента;
- Подбор аналогов;
- Консультации по применению компонента;
- Поставка образцов и прототипов;
- Техническая поддержка проекта;
- Защита от снятия компонента с производства.

Как с нами связаться

Телефон: 8 (812) 309 58 32 (многоканальный)
Факс: 8 (812) 320-02-42
Электронная почта: org@eplast1.ru
Адрес: 198099, г. Санкт-Петербург, ул. Калинина, дом 2, корпус 4, литера А.