THIS DRAWING IS UNPUBLISHED. RELEASED FOR PUBLICATION 20
© COPYRIGHT 20 BY - ALL RIGHTS RESERVED.

LOC	DIST
GP	00

REVISIONS

P	LTR	DESCRIPTION	DATE	DWN	APVD
	B1	REVISED PER ECO-11-004835	11MAR2011	RK	HMR
	C	REVISED PER ECO-11-020849	11JAN2012	CJV	PAR
	C1	REVISED PER ECO-13-003678	10APR2013	CJV	PAR

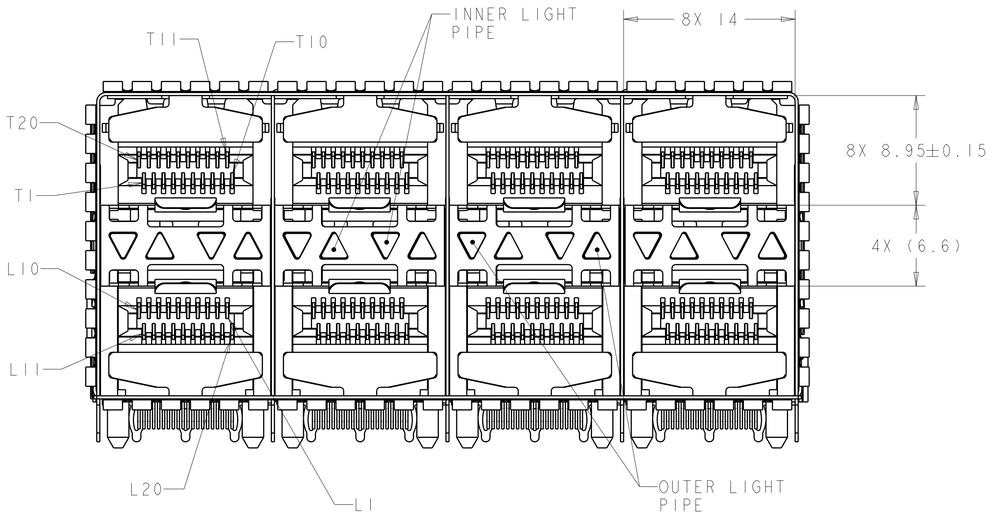

2007394-1 AS SHOWN

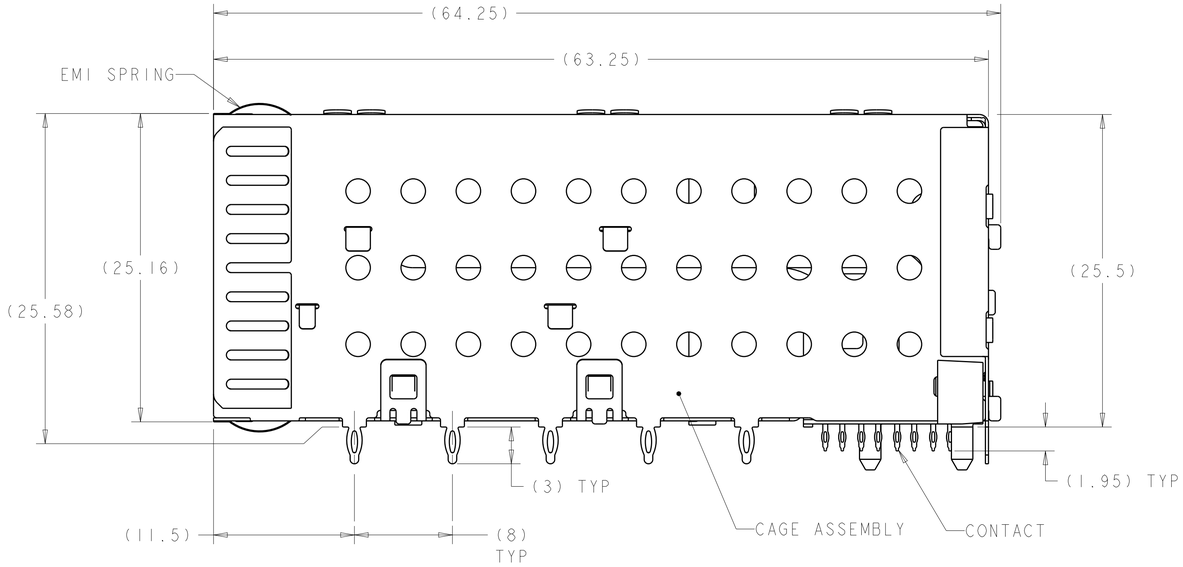

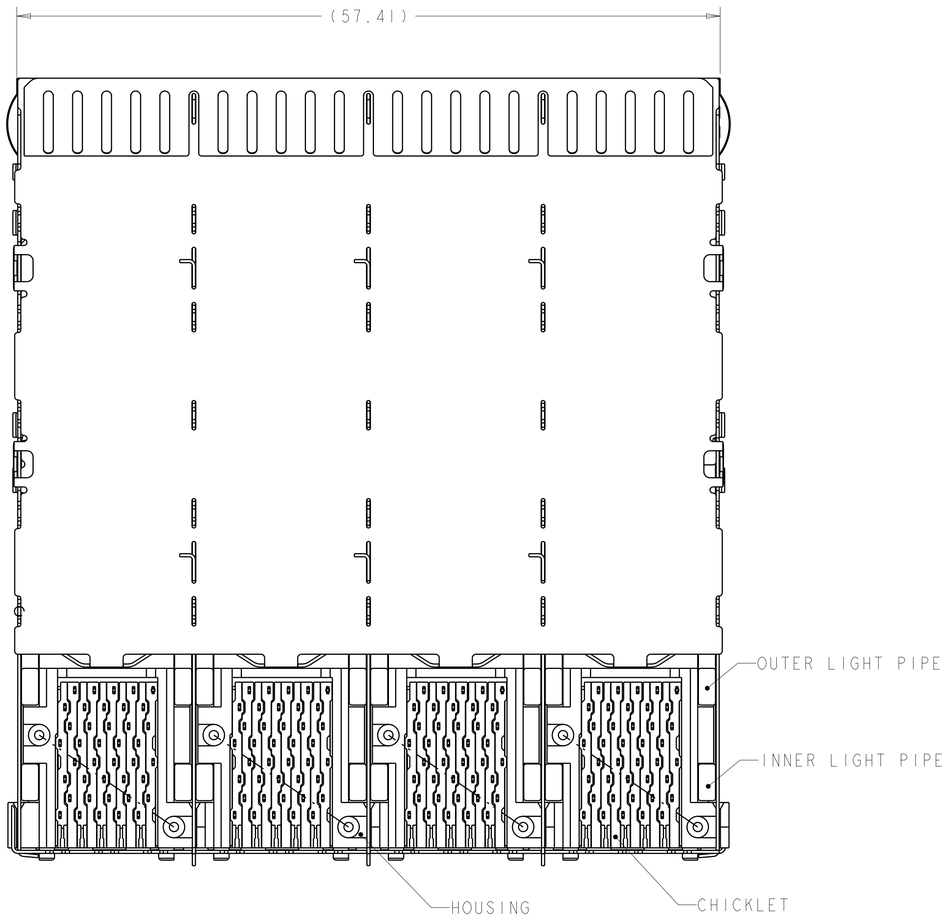

1. MATERIALS:
   CAGE ASSEMBLY- NICKEL SILVER ALLOY PER ASTM B 122.
   EMI SPRING- COPPER ALLOY.
   INSERT- PBT, BLACK, UL 94V-0.
   HOUSING- BLACK LCP, UL 94V-O RATED.
   CHICKLET- BLACK LCP, UL 94V-O RATED.
   LIGHT PIPE- POLYCARBONATE, CLEAR.
   CONTACT- COPPER ALLOY.

2. DATUM AND BASIC DIMENSIONS ESTABLISHED BY CUSTOMER.

3. MINIMUM PCB THICKNESS OF 1.5.

4. CONTACT FINISH: CONFORMS TO THE REQUIREMENTS OF TE CONNECTIVITY PRODUCT SPECIFICATION 108-2331, BASED ON EIA/ECA-364-1000.01A, (CONTROLLED ENVIRONMENT APPLICATIONS) ON MATING INTERFACE, TIN-LEAD ON NEEDLE EYE.

5. CONTACT FINISH: CONFORMS TO THE REQUIREMENTS OF TE CONNECTIVITY PRODUCT SPECIFICATION 108-2331, BASED ON EIA/ECA-364-1000.01A, (CONTROLLED ENVIRONMENT APPLICATIONS) ON MATING INTERFACE, TIN ON NEEDLE EYE.

6. FOR HOLE SIZE AND PLATINGS, SEE APPLICATION SPEC 114-13219.

7. THE ENTIRE AREA OF THE CONNECTOR FOOTPRINT, INDICATED BY THE DASHED LINE, TO BE CONSIDERED THE KEEPOUT AREA FOR COMPONENTS AND SIGNAL TRACES, TOP SIDE ONLY. TOP SIDE TRACES ALLOWED WITHIN CONNECTOR HOLE PATTERN.

8. LIGHT PIPE PAD LAYOUT IS FOR 0805 LOW PROFILE LED PACKAGE WITH A HEIGHT OF 0.8mm.

9. EMI SPRING FINISH: 0.8µm MINIMUM MATTE TIN OVER 0.8µm MINIMUM NICKEL, NONPLATED EDGES PERMISSIBLE.

10. ADDITIONAL COMPONENT LOCATED WITHIN LATCH PLATE FOR EMI SUPPRESSION.

ENHANCED EMI	FINISH	DESCRIPTION	PART NUMBER
YES 10	5	NO LIGHT PIPES	1-2007394-8
		OUTER 2 LIGHT PIPES	1-2007394-7
		INNER 2 LIGHT PIPES	1-2007394-6
		4 LIGHT PIPES	1-2007394-5
NO	5	NO LIGHT PIPES	2007394-8
		OUTER 2 LIGHT PIPES	2007394-7
		INNER 2 LIGHT PIPES	2007394-6
		4 LIGHT PIPES	2007394-5
NO	4	NO LIGHT PIPES	2007394-4
		OUTER 2 LIGHT PIPES	2007394-3
		INNER 2 LIGHT PIPES	2007394-2
		4 LIGHT PIPES	2007394-1

THIS DRAWING IS A CONTROLLED DOCUMENT. DIMENSIONING AND TOLERANCING PER ASME Y14.5M-2009

DIMENSIONS: mm

TOLERANCES UNLESS OTHERWISE SPECIFIED:
0 PLC ±0.10
1 PLC ±0.10
2 PLC ±0.10
3 PLC ±0.10
4 PLC ±
ANGLES ±

MATERIAL 1

FINISH 4 5 9

DWN M.SHIRK 10OCT2007
CHK D.SZCZESNY 10OCT2007
APVD D.SZCZESNY 10OCT2007
PRODUCT SPEC 108-2331
APPLICATION SPEC 114-13219
WEIGHT -

TE Connectivity

NAME CAGE AND PT CONNECTOR ASSEMBLY, WITH EMI SPRINGS, PRESS FIT, 2X4, STACKED SFP+

SIZE	CAGE CODE	DRAWING NO	RESTRICTED TO
A1	00779	C-2007394	-

CUSTOMER DRAWING SCALE 4:1 SHEET 1 OF 4 REV C1

THIS DRAWING IS UNPUBLISHED. RELEASED FOR PUBLICATION 20
© COPYRIGHT 20 BY - ALL RIGHTS RESERVED.

LOC	DIST
GP	00

REVISIONS

P	LTR	DESCRIPTION	DATE	DWN	APVD
	-	SEE SHEET 1	-	-	-

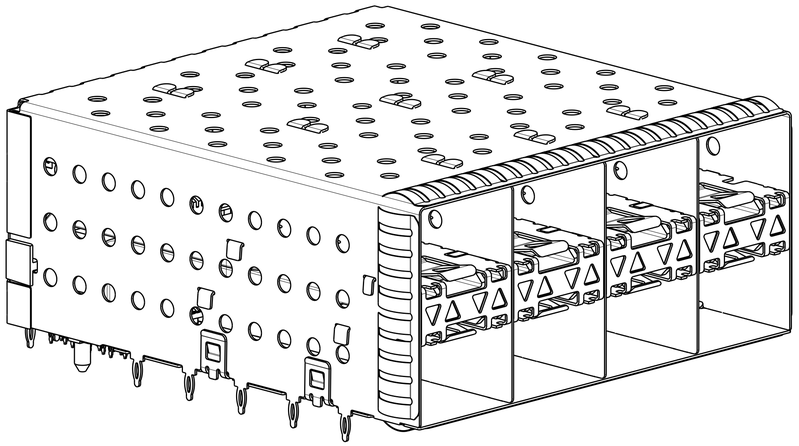

2007394-1, 2007394-5 AND 1-2007394-5
SCALE 3:1

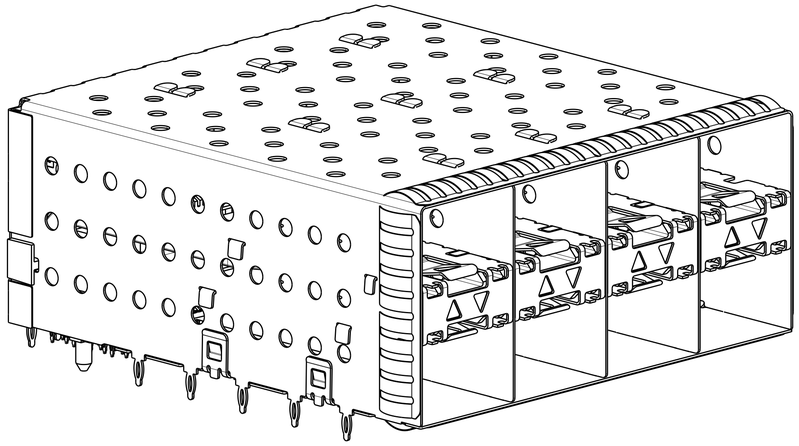

2007394-2, 2007394-6 AND 1-2007394-6
SCALE 3:1

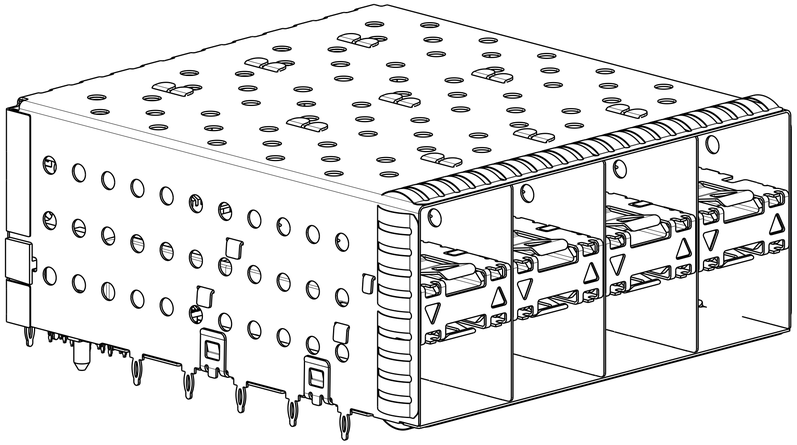

2007394-3, 2007394-7 AND 1-2007394-7
SCALE 3:1

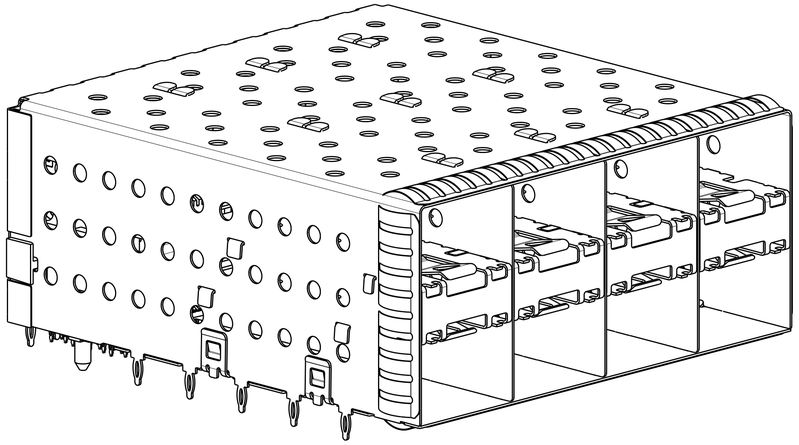

2007394-4, 2007394-8 AND 1-2007394-8
SCALE 3:1

THIS DRAWING IS A CONTROLLED DOCUMENT.
DIMENSIONING AND TOLERANCING
PER ASME Y14.5M-2009

DIMENSIONS: mm

TOLERANCES UNLESS OTHERWISE SPECIFIED:

0 PLC	±0.10
1 PLC	±0.10
2 PLC	±0.10
3 PLC	±0.10
4 PLC	±
ANGLES	±

MATERIAL

FINISH

DWN	10OCT2007 M.SHIRK
CHK	10OCT2007 D.SZCZESNY
APVD	10OCT2007 D.SZCZESNY
PRODUCT SPEC	108-2331
APPLICATION SPEC	114-13219
WEIGHT	-

TE Connectivity

NAME
CAGE AND PT CONNECTOR ASSEMBLY,
WITH EMI SPRINGS,
PRESS FIT, 2X4, STACKED SFP+

SIZE	CAGE CODE	DRAWING NO	RESTRICTED TO
A1	00779	C-2007394	-

CUSTOMER DRAWING | SCALE 4:1 | SHEET 2 OF 4 | REV C1

4805 (3/11)

THIS DRAWING IS UNPUBLISHED. RELEASED FOR PUBLICATION 20
© COPYRIGHT 20 BY - ALL RIGHTS RESERVED.

LOC	DIST
GP	00

REVISIONS

P	LTR	DESCRIPTION	DATE	DWN	APVD
	-	SEE SHEET 1	-	-	-

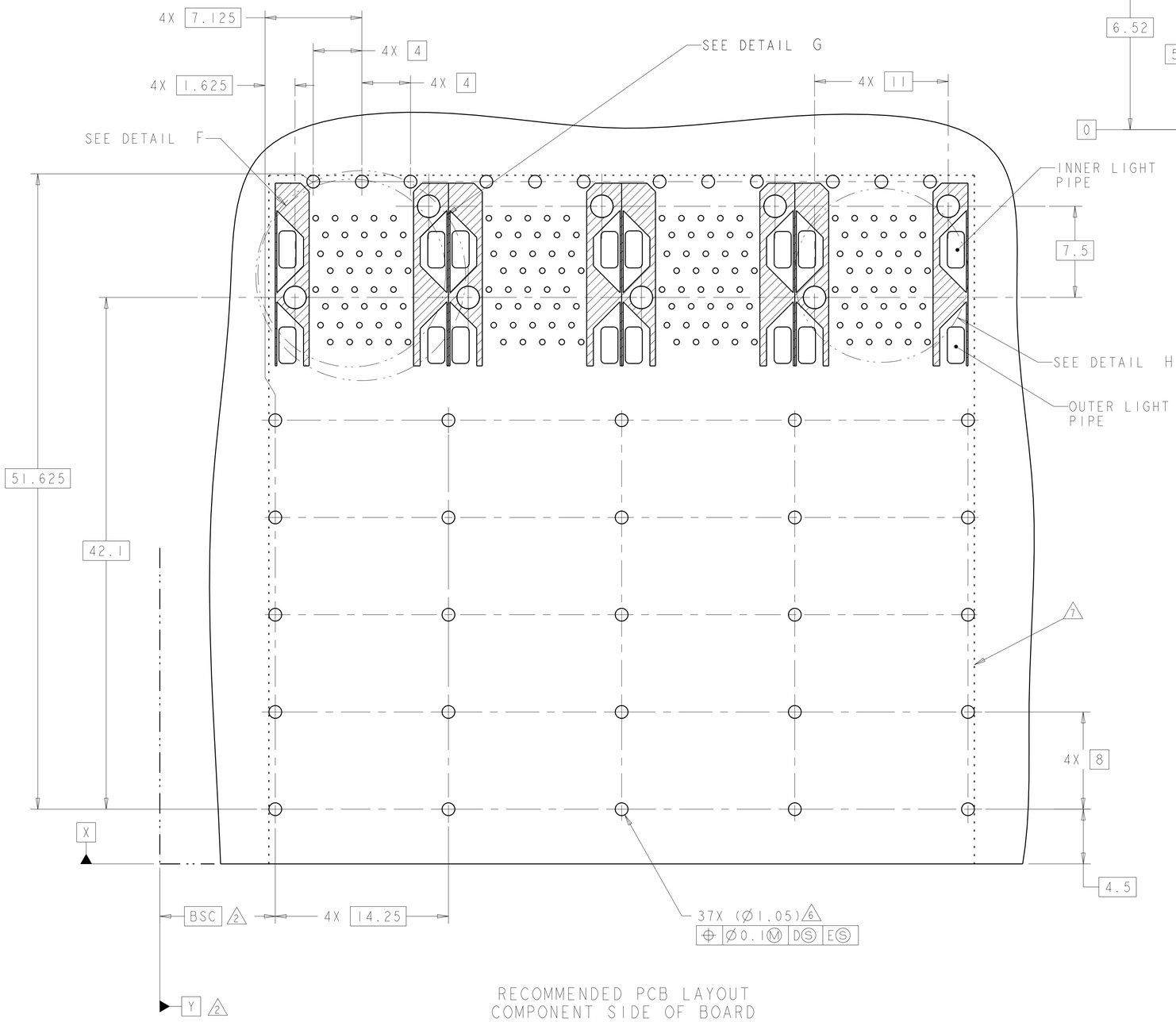

RECOMMENDED PCB LAYOUT
COMPONENT SIDE OF BOARD
SCALE 5:1

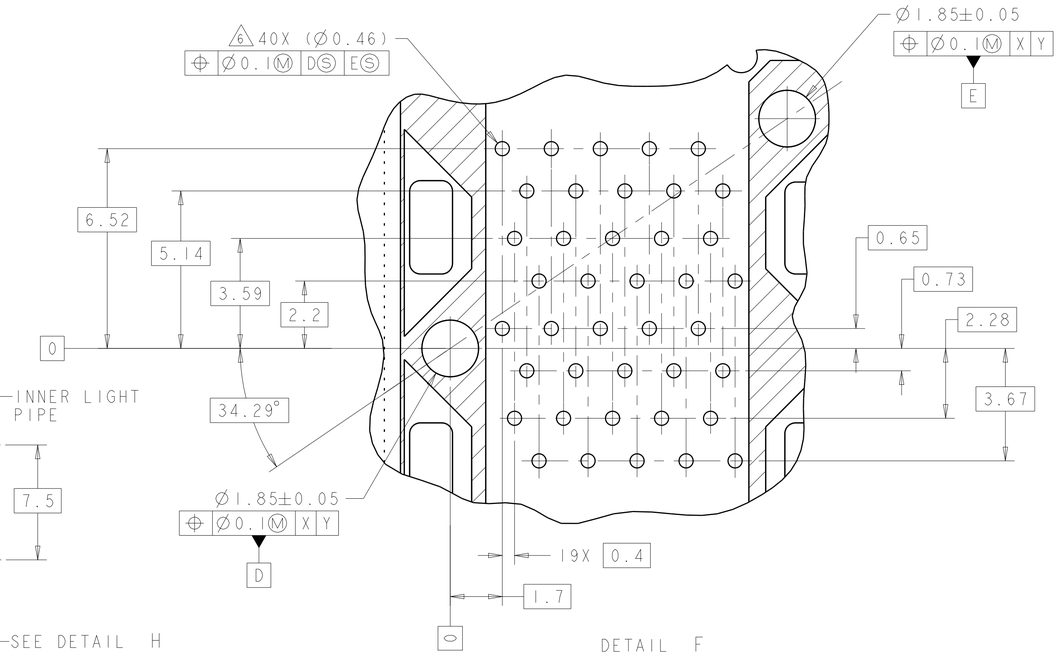

DETAIL F
4X INDIVIDUALLY
SCALE 10:1

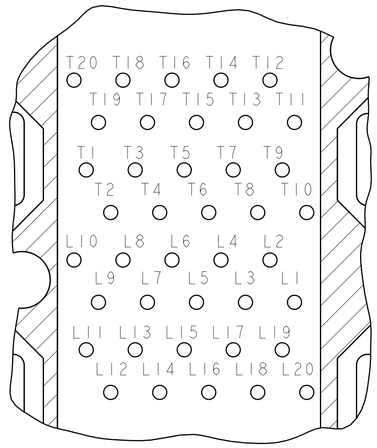

DETAIL H
CONNECTOR PIN-OUT
COMPONENT SIDE OF BOARD
4X INDIVIDUALLY
SCALE 10:1

THIS DRAWING IS A CONTROLLED DOCUMENT. DIMENSIONING AND TOLERANCING PER ASME Y14.5M-2009

DIMENSIONS: mm

TOLERANCES UNLESS OTHERWISE SPECIFIED:
0 PLC ±0.10
1 PLC ±0.10
2 PLC ±0.10
3 PLC ±0.10
4 PLC ±-
ANGLES ±-

MATERIAL
FINISH

DWN M SHIRK 10OCT2007
CHK D SZCZESNY 10OCT2007
APVD D SZCZESNY 10OCT2007
PRODUCT SPEC 108-2331
APPLICATION SPEC 114-13219
WEIGHT -

TE Connectivity

NAME CAGE AND PT CONNECTOR ASSEMBLY, WITH EMI SPRINGS, PRESS FIT, 2X4, STACKED SFP+

SIZE	CAGE CODE	DRAWING NO	RESTRICTED TO
A1	00779	C-2007394	-

CUSTOMER DRAWING SCALE 4:1 SHEET 3 OF 4 REV C1

4805 (3/11)

THIS DRAWING IS UNPUBLISHED. RELEASED FOR PUBLICATION 20
© COPYRIGHT 20 BY - ALL RIGHTS RESERVED.

LOC	DIST
GP	00

REVISIONS

P	LTR	DESCRIPTION	DATE	DWN	APVD
	-	SEE SHEET 1	-	-	-

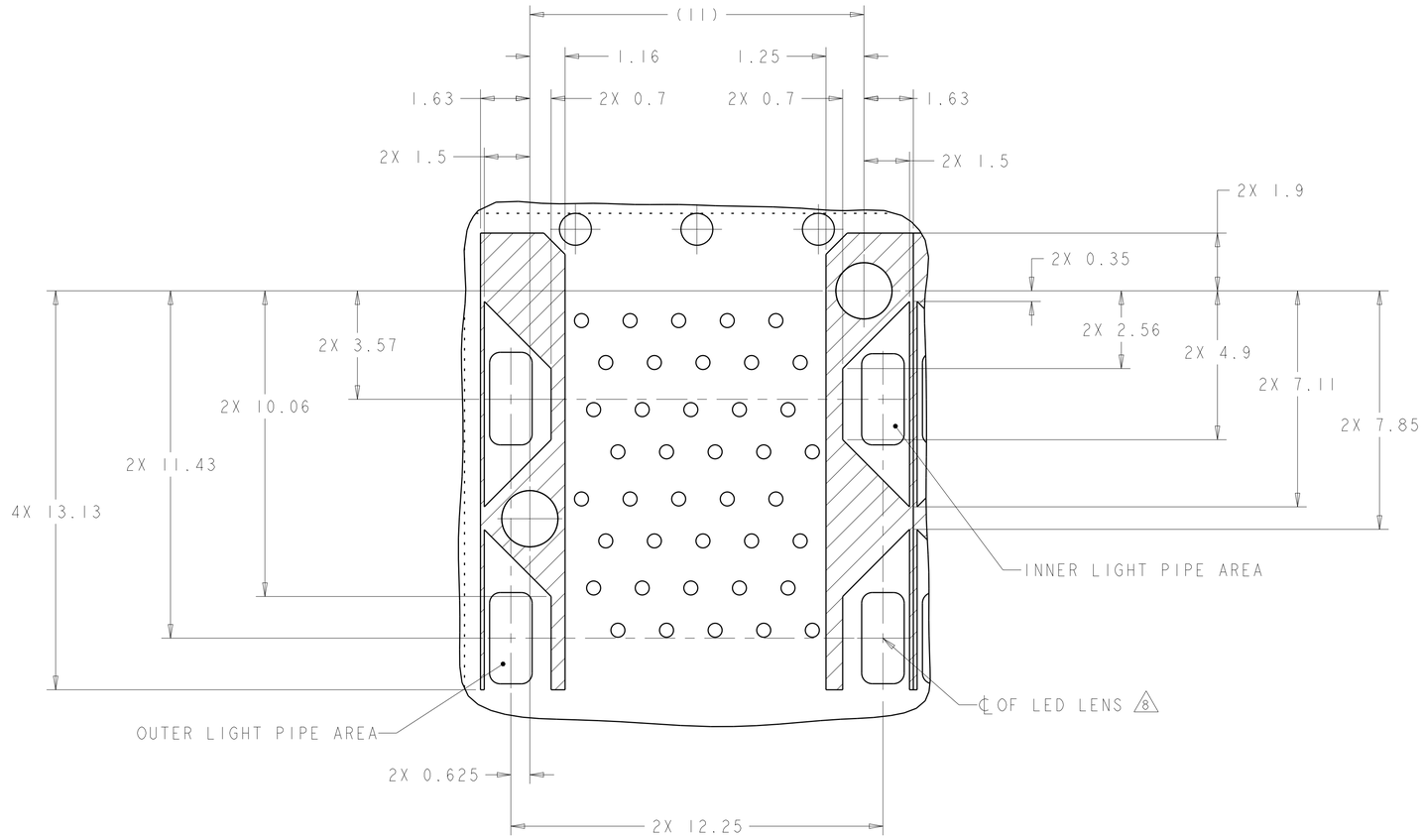

DETAIL G
CONNECTOR HOUSING
KEEPOUT ZONE
4X INDIVIDUALLY
SCALE 10:1

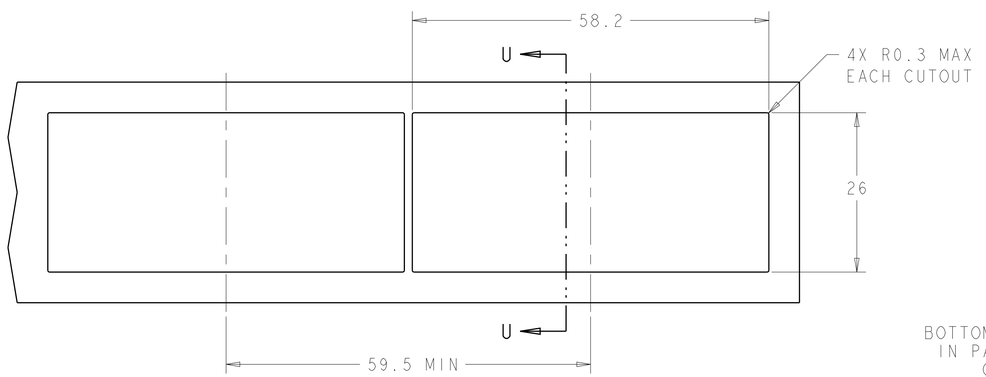

RECOMMENDED PANEL CUTOUT
AND PC BOARD, PANEL POSITION
SCALE 2:1

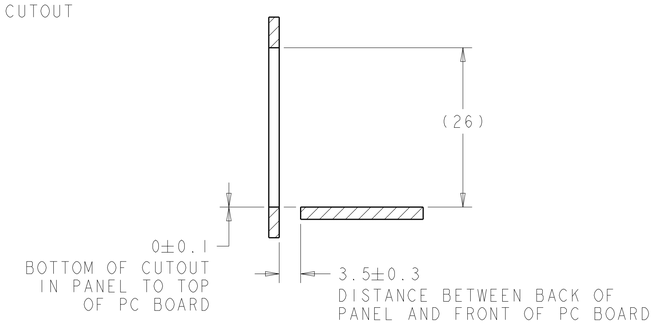

SECTION U-U

THIS DRAWING IS A CONTROLLED DOCUMENT. DIMENSIONING AND TOLERANCING PER ASME Y14.5M-2009

DIMENSIONS: mm

TOLERANCES UNLESS OTHERWISE SPECIFIED:
0 PLC ±0.10
1 PLC ±0.10
2 PLC ±0.10
3 PLC ±0.10
4 PLC ±
ANGLES ±

MATERIAL
FINISH

DWN M.SHIRK 10OCT2007
CHK D.SZCZESNY 10OCT2007
APVD D.SZCZESNY 10OCT2007
PRODUCT SPEC 108-2331
APPLICATION SPEC 114-13219
WEIGHT -

TE Connectivity

NAME CAGE AND PT CONNECTOR ASSEMBLY, WITH EMI SPRINGS, PRESS FIT, 2X4, STACKED SFP+

SIZE	CAGE CODE	DRAWING NO	RESTRICTED TO
A1	00779	C-2007394	-

CUSTOMER DRAWING | SCALE 4:1 | SHEET 4 OF 4 | REV C1

4805 (3/11)

Компания «ЭлектроПласт» предлагает заключение долгосрочных отношений при поставках импортных электронных компонентов на взаимовыгодных условиях!

Наши преимущества:

- Оперативные поставки широкого спектра электронных компонентов отечественного и импортного производства напрямую от производителей и с крупнейших мировых складов;
- Поставка более 17-ти миллионов наименований электронных компонентов;
- Поставка сложных, дефицитных, либо снятых с производства позиций;
- Оперативные сроки поставки под заказ (от 5 рабочих дней);
- Экспресс доставка в любую точку России;
- Техническая поддержка проекта, помощь в подборе аналогов, поставка прототипов;
- Система менеджмента качества сертифицирована по Международному стандарту ISO 9001;
- Лицензия ФСБ на осуществление работ с использованием сведений, составляющих государственную тайну;
- Поставка специализированных компонентов (Xilinx, Altera, Analog Devices, Intersil, Interpoint, Microsemi, Aeroflex, Peregrine, Syfer, Eurofarad, Texas Instrument, Miteq, Cobham, E2V, MA-COM, Hittite, Mini-Circuits,General Dynamics и др.);

Помимо этого, одним из направлений компании «ЭлектроПласт» является направление «Источники питания». Мы предлагаем Вам помощь Конструкторского отдела:

- Подбор оптимального решения, техническое обоснование при выборе компонента;
- Подбор аналогов;
- Консультации по применению компонента;
- Поставка образцов и прототипов;
- Техническая поддержка проекта;
- Защита от снятия компонента с производства.

Как с нами связаться

Телефон: 8 (812) 309 58 32 (многоканальный)
Факс: 8 (812) 320-02-42
Электронная почта: org@eplast1.ru
Адрес: 198099, г. Санкт-Петербург, ул. Калинина, дом 2, корпус 4, литера А.