LAST 6 DIGITS OF P/N & PART CHANGE LEVEL (PCL), MFG. DAILY DATE CODE & ASSY MACHINE NO. LETTERING MUST BE LEGIBLE OPTIONAL

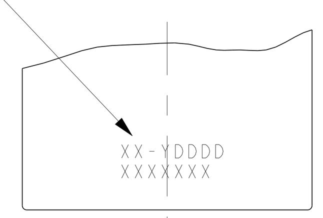

PARTIAL SIDE VIEW

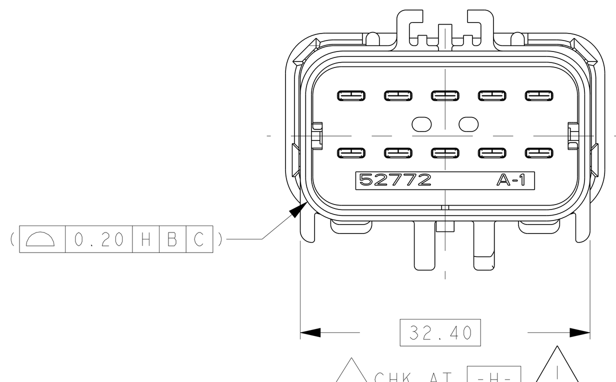

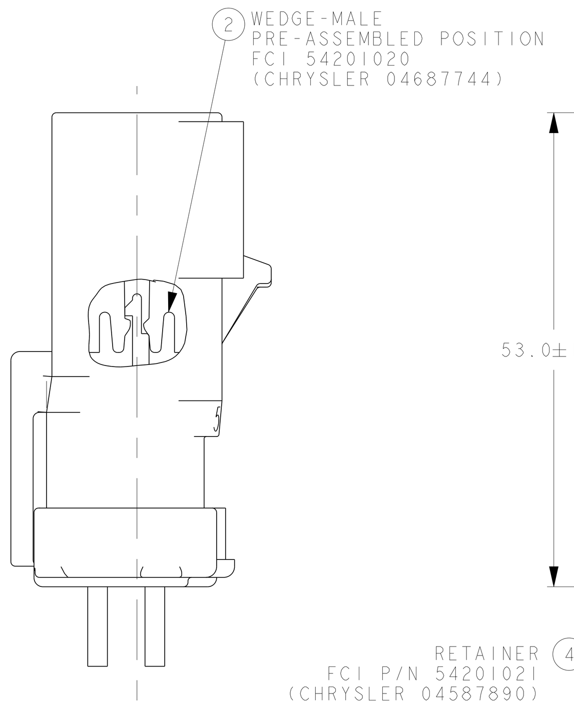

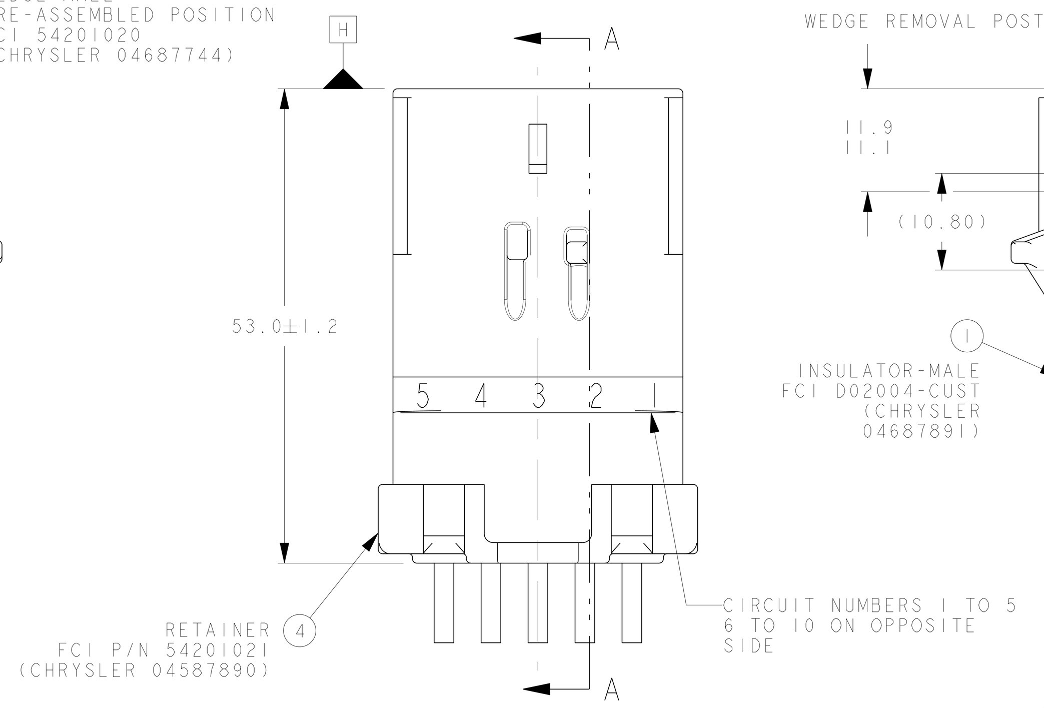

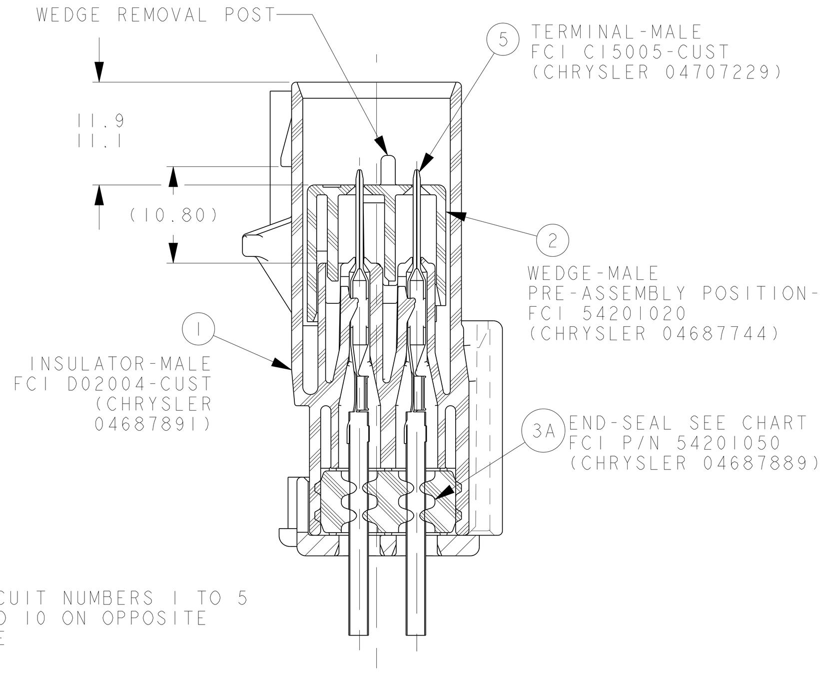

SECTION A-A
SEALED ASSEMBLY VIEW
SEE PART NUMBER CHART

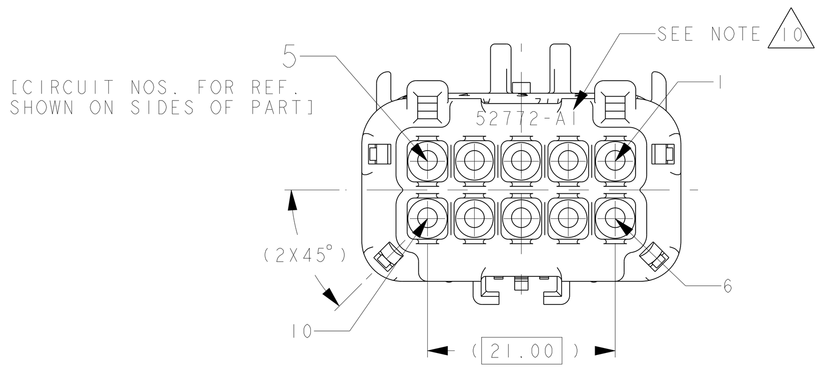

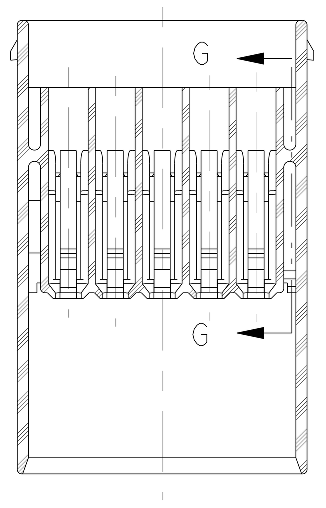

SECTION E-E

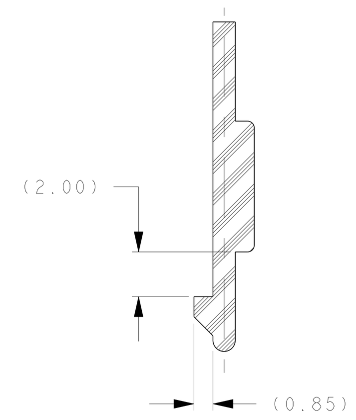

SECTION G-G
SCALE 5X

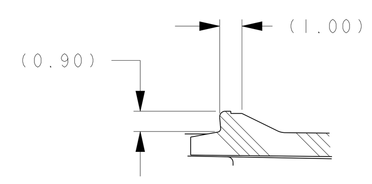

DETAIL Z
TERM, LOCK, FINGER
SCALE 5X

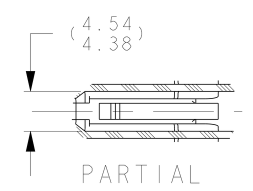

PARTIAL
SECTION F-F

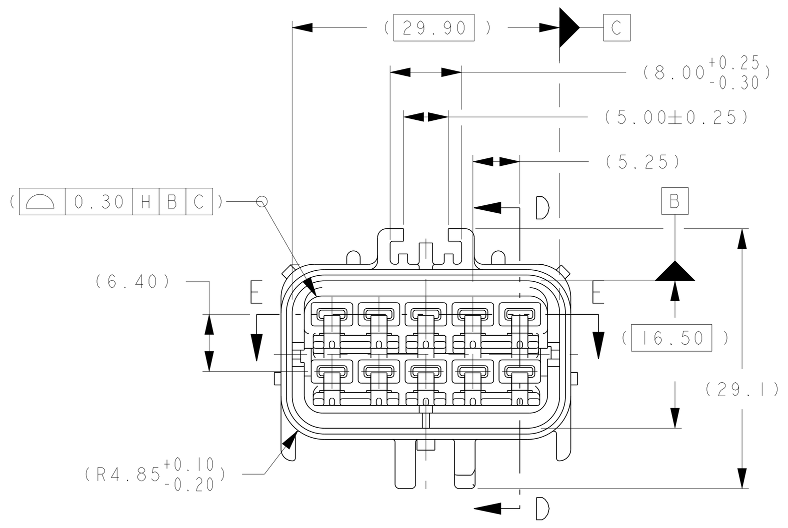

INSULATOR VIEWS
FOR REFERENCE ONLY

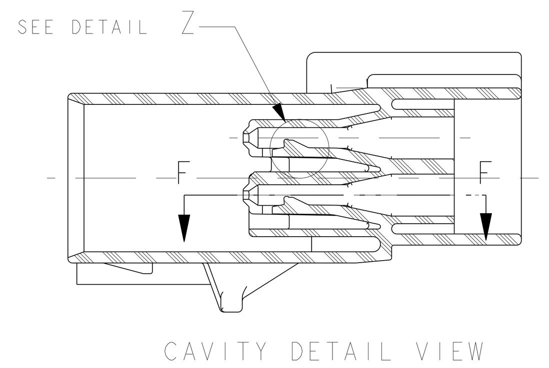

CAVITY DETAIL VIEW
SECTION D-D

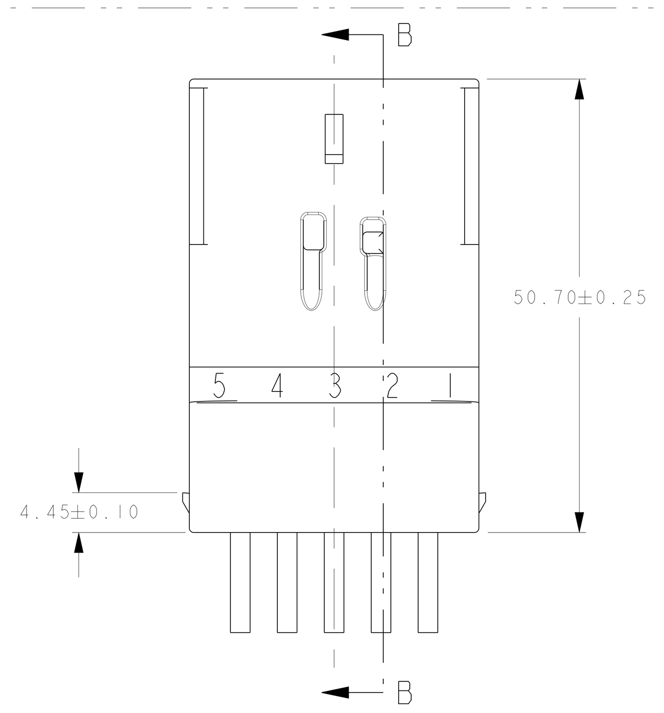

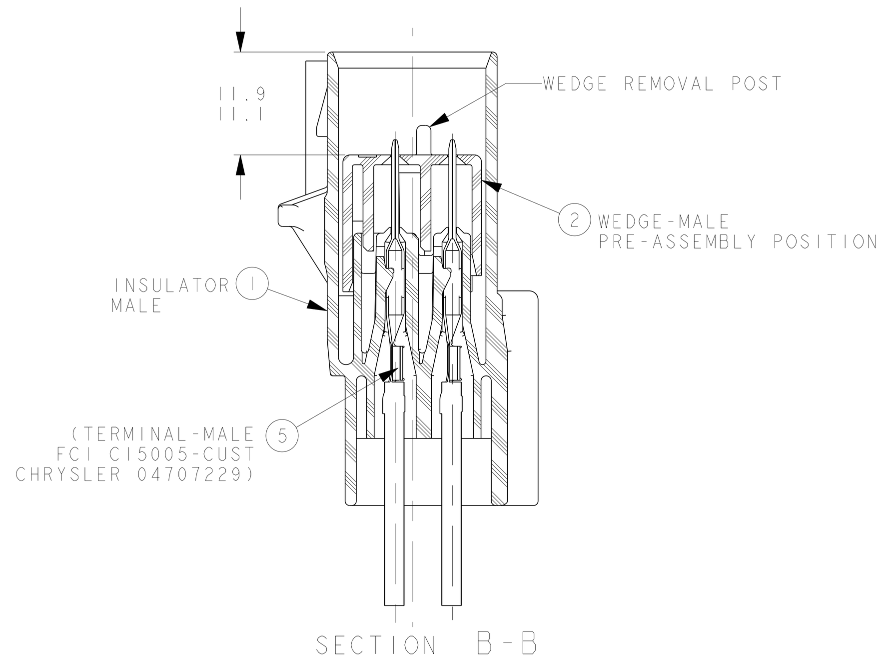

SECTION B-B
UNSEALED ASSEMBLY VIEW
SEE PART NUMBER CHART

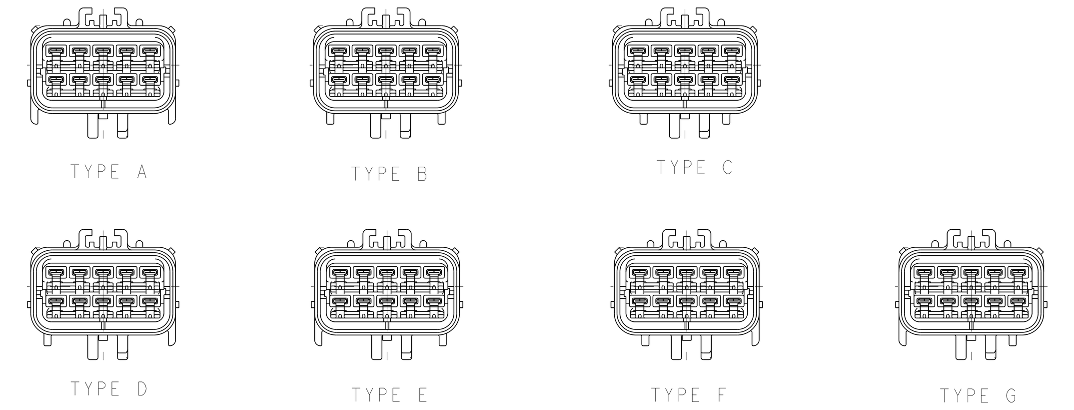

POLARIZATION OPTIONS
FULL SIZE

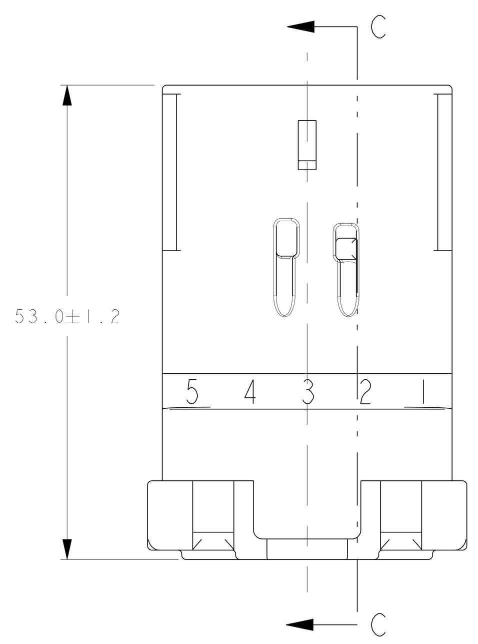

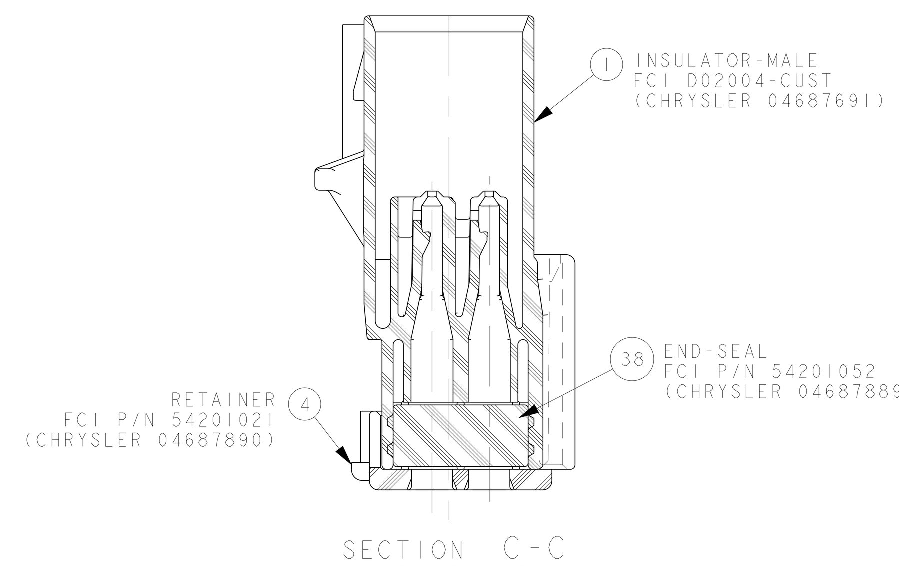

SECTION C-C
WITHOUT HOLES
SEE P/N CHART

MATING PART NUMBERS CHART

INDEX TYPE	COLOR	SEALED/ UNSEALED	FCI	(CHRYSLER)	YNA	FCI	(CHRYSLER)	YNA
G	LT BROWN	SEALED	54201042	N/A	N/A	54201043N	N/A	N/A
		SEALED	54201042	04868047AA	N/A	54201043	04868049AA	N/A
		SEALED	DIRECT CONNECT APPLICATION			*54201063	N/A	N/A
		SEALED	DIRECT CONNECT APPLICATION			*54201065N	N/A	N/A
F	AQUA	UNSEALED	DIRECT CONNECT APPLICATION			54201005N	N/A	N/A
		UNSEALED	DIRECT CONNECT APPLICATION			54201005	04687905	7283-4809-90
		SEALED	DIRECT CONNECT APPLICATION			54201015N	N/A	N/A
		SEALED	DIRECT CONNECT APPLICATION			54201015	04687899	7283-4806-90
E	DK GRN	UNSEALED	DIRECT CONNECT APPLICATION			54201003N	N/A	N/A
		UNSEALED	DIRECT CONNECT APPLICATION			54201003	04687904	7283-4808-60
		SEALED	DIRECT CONNECT APPLICATION			54201013N	N/A	N/A
		SEALED	DIRECT CONNECT APPLICATION			54201013	04687898	7283-4805-60
D	ORANGE	UNSEALED	DIRECT CONNECT APPLICATION			54201004N	N/A	N/A
		UNSEALED	DIRECT CONNECT APPLICATION			54201004	04687903	7283-4807-50
		SEALED	DIRECT CONNECT APPLICATION			54201014N	N/A	N/A
		SEALED	DIRECT CONNECT APPLICATION			54201014	04687897	7283-4804-50
C	DK GREY	SEALED	DIRECT CONNECT APPLICATION			54201011N	N/A	N/A
		SEALED	DIRECT CONNECT APPLICATION			54201011	04801117	7229-2829-40
		SEALED	DIRECT CONNECT APPLICATION			*54201023N	N/A	N/A
		SEALED	DIRECT CONNECT APPLICATION			*54201023	04801112	7223-1609-40
	LT GRN	UNSEALED	54201008	N/A	N/A	54201002N	N/A	N/A
		UNSEALED	54201008	04687911	7222-1009-60	54201002	04687902	7223-1109-60
		SEALED	54201018	N/A	N/A	54201012N	N/A	N/A
		SEALED	54201018	04687908	N/A	54201012	04687896	7283-4803-60
		SEALED	DIRECT CONNECT APPLICATION			*54201062	N/A	N/A
		SEALED	DIRECT CONNECT APPLICATION			*54201064N	N/A	N/A
B	LT GREY	UNSEALED	54201007	N/A	N/A	54201001N	N/A	N/A
		UNSEALED	54201007	04687910	N/A	54201001	04687901	7283-4802-40
		SEALED	54201017	N/A	N/A	54201010N	N/A	N/A
		SEALED	54201017	04687907	7282-4605-40	54201010	04687895	7283-4605-40
		SEALED	54201024	04688875	N/A	54201010	04687895	7283-4605-40
A	BLACK	UNSEALED	54201006	N/A	N/A	54201000N	N/A	N/A
		UNSEALED	54201006	04687909	N/A	54201000	04687900	7283-4606-30
		SEALED	54201016	04687906	7222-7406-30	54201009	04687894	7223-1605-30
		SEALED	54201016	04687906	7222-7406-30	*54201022N	04707443	7283-4801-30
		SEALED	54201016	04687906	7222-7406-30	*54201054	04759589AA	7283-4901-30
		SEALED	54201058	56045040AA	N/A	*54201054	04759589AA	7283-4901-30
		SEALED	54201016	04687906	7222-7406-30	54201056N	N/A	7283-4608-30
		SEALED	DIRECT CONNECT APPLICATION			54201051N	04707404	N/A
			CHRYSLER APPLICATION			MATING ASSEMBLY PART NUMBER FOR REFERENCE ONLY		
			MALE ASSEMBLY PART NUMBERS					

* INDICATED P/N'S ARE WITHOUT END SEAL & RETAINER

FCI - FRAMATOME CONNECTORS INTERNATIONAL
YNA - YAZAKI NORTH AMERICA
FCI SUPPLIER CODE: 52772 OR 52772H

ASSEMBLY PART NUMBERS CHART

	UNSEALED						SEALED						
FCI P/N'S	54201006	54201007	54201008				54201016	54201017	54201018	54201024	54201042	54201058	54201059
CHRYSLER P/N'S	04687909	04687910	04687911				04687906	04687907	04687908	04688875	04868047AA	56045040AA	04868464AA
YNA P/N'S	N/A	N/A	7222-1009-60				7222-7406-30	7222-4605-40	N/A	N/A	N/A	N/A	N/A

REQUIRED						REQUIRED							#	CHRYSLER P/N'S	FCI P/N	PART NAME; MATERIAL; COLOR
1						1					1		1	04687754	54201034	INSULATOR INDEX A; PA66GF; BLK
	1						1		1				1	04687969	54201035	INSULATOR INDEX B; PA66GF; LT GRY
		1						1				1	1	04687970	54201036	INSULATOR INDEX C; PA66GF; DK GRY
										1			1	04868046AA	54201040	INSULATOR INDEX D; PA66GF; NATURAL
1	1	1				1	1	1		1			2	04687744	54201020	WEDGE (TPA); PA66GF; RED
						1	1	1		1			3A	04687963	54201050	END SEAL: SILICONE; DK BLUE
									1		1	1	3B	N/A	54201052	END SEAL NO HOLES: SILICONE; BRT YLO
						1	1	1	1	1	1	1	4	04687750	54201021	RETAINER; PA66GF BLK
3	3	3				3	3	3	3	3	3	3	CONNECTOR ASSEMBLY TEMPERATURE CLASS PER SAE/USCAR-2 REV 5			
M	M	M				M	M	M	M	M	M	N	PART CHANGE LEVEL (PCL)			

NOTES:

1. QUALITY ASSURANCE REQUIREMENTS PER CHRYSLER PS-7300: 1 ◇ SPC DATA REQUIRED
2. ENGINEERING APPROVAL OF SUPPLIER SAMPLES IS REQUIRED PRIOR TO AUTHORIZATION OF PART PRODUCTION
3. CHANGES IN DESIGN COMPOSITION OR PROCESSING FROM THE PART PREVIOUSLY APPROVED FOR PART PRODUCTION REQUIRES PRIOR ENGINEERING APPROVAL
4. WIRING FABRICATORS MUST PURCHASE FROM SOURCES SHOWN
5. ALL THE SEALED CONNECTOR APPLICATIONS MUST BE USED WITH CHRYSLER WIRE SPEC. MS-8288 OR MS-9502 THIN WALL X-LINK 20, 18, 16, 14, & 12 GAGE WIRES ONLY UNLESS OTHERWISE SPECIFIED (WIRE INSULATIONS Ø1.70 MIN TO Ø3.35 MAX) ISO THINWALL EQUIVALENTS PERMISSIBLE
6. ALL NON-SEALED APPLICATIONS MAY BE USED WITH ANY WIRE INSULATION 22 GAGE THRU 10 GAGE (EXCEPT AS NOTED) PROVIDING THAT A TERMINAL GRIP FOR THAT CORE/INSULATION COMBINATION IS SHOWN ON THE MALE TERMINAL DRAWING ISO THINWALL EQUIVALENTS PERMISSIBLE
   MAX. INSULATION CRIMP WIDTH = 4.50
   MAX. INSULATION CRIMP HEIGHT= 4.50
   MAX. INSULATION DIA. = 4.09 (10 GA THIN WALL)
7. USE WITH FOLLOWING APPLICABLE COMPONENTS AS NEEDED:
   CAVITY PLUG FCI P/N 54200005, (CHRYSLER P/N 56038308)
   DOUBLE X-MAS TREE CLIP CHRYSLER P/N 04707091
   SINGLE X-MAS TREE CLIP CHRYSLER P/N 04625797
   DOUBLE X-MAS TREE CLIP WITH FORWARD STOP FCI P/N 54200010
   2.80MM APEX MALE TERM C15005-CUST SYM. ABOUT CENTERLINE FOR 180° ORIENTATION
8. DIRECT CONNECT INTERFACE PER FCI G36010 (CHRYSLER 04707028)
9. TEST METHOD PER CHRYSLER PERFORMANCE SPEC# PF-9600, CONNECTOR ENGAGE & DISENGAGE WITH LATCH DEPRESSED FORCE NOT TO EXCEED 120N. FOR THIS SYSTEM
   WEDGE SEATING FORCES - 100 N. MAX
   X-MAS TREE CLIP INSERTION FORCES - 75 N. MAX
10. SUPPLIER, MOLD & CAVITY I.D. SIGNIFIES TOOL OWNERSHIP, FOR REFERENCE
11. ANNUAL QUALITY REQUIREMENTS:
   IT IS PERMISSIBLE TO PERFORM CONTINUOUS CONFORMANCE PER FCI SPECIFICATION #AQA-001 INSTEAD OF ANNUAL LAYOUT & ANNUAL PV REQUIREMENTS OF QS-9000 SECTION 2 & SAE/USCAR-2 REV 5

ALL NON-REFERENCE DIMENSIONS ARE REQUIRED

- USE INDEX A, BLACK SEALED AND UNSEALED FOR ALL AFFECTED INSULATOR CAVITIES
- CURRENT PRODUCTION TOOLING
- POINT OF LAST RUN

SERVICE TOOLING GUIDE INFORMATION PER APEX TRAINING MANUAL

12. MUST CONFORM TO THE FOLLOWING CHRYSLER /YNA STANDARDS:
   PF-9600 PERFORMANCE (CHRYSLER) EXCEPT AS NOTED ABOVE
   PS-7300 QUALITY ASSURANCE (CHRYSLER)
   MS-9502 SEAL APPL. 150° C
   MS-8288 SEDL APPL. 125° C
   PS-9227 DATA EXCHANGE (CHRYSLER),(G009-7 YNA)
   PS-10052 INFORMATION SECURITY (CHRYSLER)
13. THIS DRAWING (H59015) REPLACES CHRYSLER DRAWING 04687873 LEVEL "N" CHRYSLER DRAWING NUMBER IS FOR REFERENCE ONLY (NOT AVAILABLE)

ECN-NO.	ZONE	CHANGE DESCRIPTION
12-00659	ALL	REVISED & REDRAWN IN PDS, SEE REV Q1 FOR PREVIOUS CHANGES NOTES AND ASSEMBLY P/N CHARTS UPDATED

PRODUCT SPEC.	APEX 2.8	
PACKAGING SPEC.	-	
APPLICATION SPEC.	-	
TOLERANCES	1 PLACE DIM ± 0.25; 2 PLACE DIM ± 0.10; ANGULAR DIM ± 2°	
COUNTERPART Nr.	H59005	
MATERIAL	SEE NOTES	
COLOUR	SEE NOTES	
SURFACE FINISH	-	
DO NOT MEASURE DRAWING		
TOOL NO.	A038	ECO Loc. Code AN
TITLE	CHART - ASSEMBLY 10 - WAY MALE	
PROJECT	APEX 2.8 CONNECTOR SYSTEM	
ESR NO.	USA-WT204	CAT. NO. -
DRAWING NUMBER	H59015	REV. R
STATE	SERIAL RELEASED	
PART NUMBER	See Table	REV. -
CAD SYSTEM	pro / eng.	
DWG SIZE	A0	
APPROVAL LEVEL	-	
SHEET	1 of 1	
SCALE	2:1	
3RD ANGLE	DIMENSION IN MILLIMETERS	
FILE NAME	H59015	

	DATE	NAME
CREATED BY	2001-09-26	I.PELIONE
MODIFIED BY	2012/05/30	Sucha SIAN
CHECKED BY	2012/05/30	Frank HOLUB
APPROVED BY	2012/05/30	Jeff CAMPBELL

THIS DRAWING AND ALL OTHER INFORMATION CONTAINED THEREIN IS PROPRIETARY AND THE PROPERTY OF FCI. This drawing may not be copied, reproduced or disclosed to any third party without the expressed written permission of FCI. FCI April © 1999

DOCUMENT UNDER PDS CONTROL NO MODIFICATION ALLOWED OUTSIDE

EUR C04 112 F29 PDS

Компания «ЭлектроПласт» предлагает заключение долгосрочных отношений при поставках импортных электронных компонентов на взаимовыгодных условиях!

Наши преимущества:

- Оперативные поставки широкого спектра электронных компонентов отечественного и импортного производства напрямую от производителей и с крупнейших мировых складов;
- Поставка более 17-ти миллионов наименований электронных компонентов;
- Поставка сложных, дефицитных, либо снятых с производства позиций;
- Оперативные сроки поставки под заказ (от 5 рабочих дней);
- Экспресс доставка в любую точку России;
- Техническая поддержка проекта, помощь в подборе аналогов, поставка прототипов;
- Система менеджмента качества сертифицирована по Международному стандарту ISO 9001;
- Лицензия ФСБ на осуществление работ с использованием сведений, составляющих государственную тайну;
- Поставка специализированных компонентов (Xilinx, Altera, Analog Devices, Intersil, Interpoint, Microsemi, Aeroflex, Peregrine, Syfer, Eurofarad, Texas Instrument, Miteq, Cobham, E2V, MA-COM, Hittite, Mini-Circuits,General Dynamics и др.);

Помимо этого, одним из направлений компании «ЭлектроПласт» является направление «Источники питания». Мы предлагаем Вам помощь Конструкторского отдела:

- Подбор оптимального решения, техническое обоснование при выборе компонента;
- Подбор аналогов;
- Консультации по применению компонента;
- Поставка образцов и прототипов;
- Техническая поддержка проекта;
- Защита от снятия компонента с производства.

Как с нами связаться

Телефон: 8 (812) 309 58 32 (многоканальный)
Факс: 8 (812) 320-02-42
Электронная почта: org@eplast1.ru
Адрес: 198099, г. Санкт-Петербург, ул. Калинина, дом 2, корпус 4, литера А.