Variable Resolution, 10-Bit to 16-Bit R/D Converter with Reference Oscillator

AD2S1210

FEATURES

Complete monolithic resolver-to-digital converter
3125 rps maximum tracking rate (10-bit resolution)
±2.5 arc minutes of accuracy
10-/12-/14-/16-bit resolution, set by user
Parallel and serial 10-bit to 16-bit data ports
Absolute position and velocity outputs
System fault detection
Programmable fault detection thresholds
Differential inputs
Incremental encoder emulation
Programmable sinusoidal oscillator on-board
Compatible with DSP and SPI interface standards
5 V supply with 2.3 V to 5 V logic interface
–40°C to +125°C temperature rating

APPLICATIONS

DC and ac servo motor control
Encoder emulation
Electric power steering
Electric vehicles
Integrated starter generators/alternators
Automotive motion sensing and control

GENERAL DESCRIPTION

The AD2S1210 is a complete 10-bit to 16-bit resolution tracking resolver-to-digital converter, integrating an on-board programmable sinusoidal oscillator that provides sine wave excitation for resolvers.

The converter accepts 3.15 V p-p ± 27% input signals, in the range of 2 kHz to 20 kHz on the sine and cosine inputs. A Type II servo loop is employed to track the inputs and convert the input sine and cosine information into a digital representation of the input angle and velocity. The maximum tracking rate is 3125 rps.

FUNCTIONAL BLOCK DIAGRAM

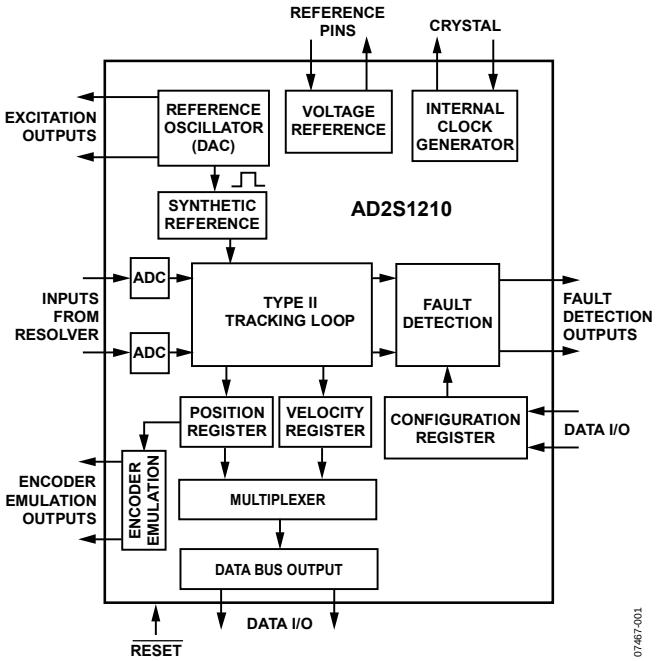

Figure 1.

PRODUCT HIGHLIGHTS

1. Ratiometric tracking conversion. The Type II tracking loop provides continuous output position data without conversion delay. It also provides noise immunity and tolerance of harmonic distortion on the reference and input signals.
2. System fault detection. A fault detection circuit can sense loss of resolver signals, out-of-range input signals, input signal mismatch, or loss of position tracking. The fault detection threshold levels can be individually programmed by the user for optimization within a particular application.
3. Input signal range. The sine and cosine inputs can accept differential input voltages of 3.15 V p-p ± 27%.
4. Programmable excitation frequency. Excitation frequency is easily programmable to a number of standard frequencies between 2 kHz and 20 kHz.
5. Triple format position data. Absolute 10-bit to 16-bit angular position data is accessed via either a 16-bit parallel port or a 4-wire serial interface. Incremental encoder emulation is in standard A-quad-B format with direction output available.
6. Digital velocity output. 10-bit to 16-bit signed digital velocity accessed via either a 16-bit parallel port or a 4-wire serial interface.

Rev. A
Information furnished by Analog Devices is believed to be accurate and reliable. However, no responsibility is assumed by Analog Devices for its use, nor for any infringements of patents or other rights of third parties that may result from its use. Specifications subject to change without notice. No license is granted by implication or otherwise under any patent or patent rights of Analog Devices. Trademarks and registered trademarks are the property of their respective owners.

One Technology Way, P.O. Box 9106, Norwood, MA 02062-9106, U.S.A.
Tel: 781.329.4700 **www.analog.com**
Fax: 781.461.3113 **©2008–2010 Analog Devices, Inc. All rights reserved.**

TABLE OF CONTENTS

Features ... 1
Applications ... 1
Functional Block Diagram ... 1
General Description ... 1
Product Highlights ... 1
Revision History ... 2
Specifications ... 3
  Timing Specifications ... 6
Absolute Maximum Ratings ... 8
  ESD Caution ... 8
Pin Configuration and Function Descriptions ... 9
Typical Performance Characteristics ... 11
Resolver Format Signals ... 15
Theory of Operation ... 16
  Resolver to Digital Conversion ... 16
  Fault Detection Circuit ... 16
  On-Board Programmable Sinusoidal Oscillator ... 18
  Synthetic Reference Generation ... 18
Configuration of AD2S1210 ... 20
  Modes of Operation ... 20
Register Map ... 21
  Position Register ... 21
  Velocity Register ... 21
  LOS Threshold Register ... 21
  DOS Overrange Threshold Register ... 21
  DOS Mismatch Threshold Register ... 21
  DOS Reset Maximum and Minimum Threshold Registers ... 22
  LOT High Threshold Register ... 22
  LOT Low Threshold Register ... 22
  Excitation Frequency Register ... 22
  Control Register ... 22
  Software Reset Register ... 23
  Fault Register ... 23
Digital interface ... 24
  $\overline{\text{SOE}}$ Input ... 24
  $\overline{\text{SAMPLE}}$ Input ... 24
  Data Format ... 24
  Parallel Interface ... 24
  Serial Interface ... 28
  Incremental Encoder Outputs ... 31
  Supply Sequencing and Reset ... 31
Circuit Dynamics ... 32
  Loop Response Model ... 32
  Sources of Error ... 33
Outline Dimensions ... 34
  Ordering Guide ... 34

REVISION HISTORY

2/10—Rev. 0 to Rev. A

Changes to Typical Performance Characteristics Section ... 11, 12
Changes to Ordering Guide ... 34

8/08—Revision 0: Initial Version

SPECIFICATIONS

AV_{DD} = DV_{DD} = 5.0 V ± 5%, CLKIN = 8.192 MHz ± 25%, EXC, $\overline{EXC}$ frequency = 10 kHz to 20 kHz (10-bit); 6 kHz to 20 kHz (12-bit); 3 kHz to 12 kHz (14-bit); 2 kHz to 10 kHz (16-bit); T_A = T_{MIN} to T_{MAX}; unless otherwise noted.[1]

Table 1.

Parameter	Min	Typ	Max	Unit	Conditions/Comments
SINE, COSINE INPUTS[2]					
Voltage Amplitude	2.3	3.15	4.0	V p-p	Sinusoidal waveforms, differential SIN to SINLO, COS to COSLO
Input Bias Current			8.25	µA	V_{IN} = 4.0 V p-p, CLKIN = 8.192 MHz
Input Impedance	485			kΩ	V_{IN} = 4.0 V p-p, CLKIN = 8.192 MHz
Phase Lock Range	−44		+44	Degrees	Sine/cosine vs. EXC output, Control Register D3 = 0
Common-Mode Rejection		±20		arc sec/V	10 Hz to 1 MHz, Control Register D4 = 0
ANGULAR ACCURACY[3]					
Angular Accuracy		±2.5 + 1 LSB	±5 + 1 LSB	arc min	B, D grades
		±5 + 1 LSB	±10 + 1 LSB	arc min	A, C grades
Resolution		10, 12, 14, 16		Bits	No missing codes
Linearity INL					
10-bit			±1	LSB	B, D grades
			±2	LSB	A, C grades
12-bit			±2	LSB	B, D grades
			±4	LSB	A, C grades
14-bit			±4	LSB	B, D grades
			±8	LSB	A, C grades
16-bit			±16	LSB	B, D grades
			±32	LSB	A, C grades
Linearity DNL			±0.9	LSB	
Repeatability		±1		LSB	
VELOCITY OUTPUT					
Velocity Accuracy[4]					
10-bit			±2	LSB	B, D grades, zero acceleration
			±4	LSB	A, C grades, zero acceleration
12-bit			±2	LSB	B, D grades, zero acceleration
			±4	LSB	A, C grades, zero acceleration
14-bit			±4	LSB	B, D grades, zero acceleration
			±8	LSB	A, C grades, zero acceleration
16-bit			±16	LSB	B, D grades, zero acceleration
			±32	LSB	A, C grades, zero acceleration
Resolution[5]		9, 11, 13, 15		Bits	
DYNAMNIC PERFORMANCE					
Bandwidth					
10-bit	2000		6500	Hz	
	2900		5300	Hz	CLKIN = 8.192 MHz
12-bit	900		2800	Hz	
	1200		2200	Hz	CLKIN = 8.192 MHz
14-bit	400		1500	Hz	
	600		1200	Hz	CLKIN = 8.192 MHz
16-bit	100		350	Hz	
	125		275	Hz	CLKIN = 8.192 MHz

Parameter	Min	Typ	Max	Unit	Conditions/Comments
Tracking Rate					
10-bit			3125	rps	CLKIN = 10.24 MHz
			2500		CLKIN = 8.192 MHz
12-bit			1250	rps	CLKIN = 10.24 MHz
			1000		CLKIN = 8.192 MHz
14-bit			625	rps	CLKIN = 10.24 MHz
			500		CLKIN = 8.192 MHz
16-bit			156.25	rps	CLKIN = 10.24 MHz
			125		CLKIN = 8.192 MHz
Acceleration Error					
10-bit		30		arc min	At 50,000 rps^2, CLKIN = 8.192 MHz
12-bit		30		arc min	At 10,000 rps^2, CLKIN = 8.192 MHz
14-bit		30		arc min	At 2500 rps^2, CLKIN = 8.192 MHz
16-bit		30		arc min	At 125 rps^2, CLKIN = 8.192 MHz
Settling Time 10° Step Input					
10-bit		0.6	0.9	ms	To settle to within ±2 LSB , CLKIN = 8.192 MHz
12-bit		2.2	3.1	ms	To settle to within ±2 LSB, CLKIN = 8.192 MHz
14-bit		6.5	9.0	ms	To settle to within ±2 LSB , CLKIN = 8.192 MHz
16-bit		27.5	40	ms	To settle to within ±2 LSB, CLKIN = 8.192 MHz
Settling Time 179° Step Input					
10-bit		1.5	2.2	ms	To settle to within ±2 LSB , CLKIN = 8.192 MHz
12-bit		4.75	6.0	ms	To settle to within ±2 LSB, CLKIN = 8.192 MHz
14-bit		10.5	14.7	ms	To settle to within ±2 LSB , CLKIN = 8.192 MHz
16-bit		45	66	ms	To settle to within ±2 LSB, CLKIN = 8.192 MHz
EXC, $\overline{\text{EXC}}$ OUTPUTS					
Voltage	3.2	3.6	4.0	V p-p	Load ±100 µA, typical differential output (EXC to $\overline{\text{EXC}}$) = 7.2 V p-p
Center Voltage	2.40	2.47	2.53	V	
Frequency	2		20	kHz	
EXC/$\overline{\text{EXC}}$ DC Mismatch			30	mV	
EXC/$\overline{\text{EXC}}$ AC Mismatch			100	mV	
THD		−58		dB	First five harmonics
VOLTAGE REFERENCE					
REFOUT	2.40	2.47	2.53	V	$\pm I_{OUT}$ = 100 µA
Drift		100		ppm/°C	
PSRR		−60		dB	
CLKIN, XTALOUT[6]					
V_{IL} Voltage Input Low			0.8	V	
V_{IH} Voltage Input High	2.0			V	
LOGIC INPUTS					
V_{IL} Voltage Input Low			0.8	V	V_{DRIVE} = 2.7 V to 5.25 V
			0.7	V	V_{DRIVE} = 2.3 V to 2.7 V
V_{IH} Voltage Input High	2.0			V	V_{DRIVE} = 2.7 V to 5.25 V
	1.7			V	V_{DRIVE} = 2.3 V to 2.7 V
I_{IL} Low Level Input Current (Non Pull-Up)			10	µA	
I_{IL} Low Level Input Current (Pull-Up)			80	µA	RES0, RES1, $\overline{\text{RD}}$, $\overline{\text{WR}}$/$\overline{\text{FSYNC}}$, A0, A1, and $\overline{\text{RESET}}$ pins
I_{IH} High Level Input Current	−10			µA	
LOGIC OUTPUTS					
V_{OL} Voltage Output Low			0.4	V	V_{DRIVE} = 2.3 V to 5.25 V
V_{OH} Voltage Output High	2.4			V	V_{DRIVE} = 2.7 V to 5.25 V
	2.0			V	V_{DRIVE} = 2.3 V to 2.7 V
I_{OZH} High Level Three-State Leakage	−10			µA	
I_{OZL} Low Level Three-State Leakage			10	µA	

Parameter	Min	Typ	Max	Unit	Conditions/Comments
POWER REQUIREMENTS					
AV_{DD}	4.75		5.25	V	
DV_{DD}	4.75		5.25	V	
V_{DRIVE}	2.3		5.25	V	
POWER SUPPLY					
I_{AVDD}			12	mA	
I_{DVDD}			35	mA	
I_{OVDD}			2	mA	

[1] Temperature ranges are as follows: A, B grades: –40°C to +85°C; C, D grades: –40°C to +125°C.
[2] The voltages, SIN, SINLO, COS, and COSLO, relative to AGND, must always be between 0.15 V and AV_{DD} – 0.2 V.
[3] All specifications within the angular accuracy parameter are tested at constant velocity, that is, zero acceleration.
[4] The velocity accuracy specification includes velocity offset and dynamic ripple.
[5] For example when RES0 = 0 and RES1 = 1, the position output has a resolution of 12 bits. The velocity output has a resolution of 11 bits with the MSB indicating the direction of rotation. In this example, with a CLKIN frequency of 8.192 MHz the velocity LSB is 0.488 rps, that is, 1000 rps/(2^{11}).
[6] The clock frequency of the AD2S1210 can be supplied with a crystal, an oscillator, or directly from a DSP/microprocessor digital output. When using a single-ended clock signal directly from the DSP/microprocessor, the XTALOUT pin should remain open circuit and the logic levels outlined under the logic inputs parameter in Table 1 apply.

TIMING SPECIFICATIONS

$AV_{DD} = DV_{DD} = 5.0$ V ± 5%, $T_A = T_{MIN}$ to T_{MAX}, unless otherwise noted.[1]

Table 2.

Parameter	Description	Limit at T_{MIN}, T_{MAX}	Unit
f_{CLKIN}	Frequency of clock input	6.144	MHz min
		10.24	MHz max
t_{CK}	Clock period (= $1/f_{CLKIN}$)	98	ns min
		163	ns max
t_1	A0 and A1 setup time before $\overline{RD}/\overline{CS}$ low	2	ns min
t_2	Delay $\overline{CS}$ falling edge to $\overline{WR}/\overline{FSYNC}$ rising edge	22	ns min
t_3	Address/data setup time during a write cycle	3	ns min
t_4	Address/data hold time during a write cycle	2	ns min
t_5	Delay $\overline{WR}/\overline{FSYNC}$ rising edge to $\overline{CS}$ rising edge	2	ns min
t_6	Delay $\overline{CS}$ rising edge to $\overline{CS}$ falling edge	10	ns min
t_7	Delay between writing address and writing data	$2 \times t_{CK} + 20$	ns min
t_8	A0 and A1 hold time after $\overline{WR}/\overline{FSYNC}$ rising edge	2	ns min
t_9	Delay between successive write cycles	$6 \times t_{CK} + 20$	ns min
t_{10}	Delay between rising edge of $\overline{WR}/\overline{FSYNC}$ and falling edge of $\overline{RD}$	2	ns min
t_{11}	Delay $\overline{CS}$ falling edge to $\overline{RD}$ falling edge	2	ns min
t_{12}	Enable delay $\overline{RD}$ low to data valid in configuration mode		
	V_{DRIVE} = 4.5 V to 5.25 V	37	ns min
	V_{DRIVE} = 2.7 V to 3.6 V	25	ns min
	V_{DRIVE} = 2.3 V to 2.7 V	30	ns min
t_{13}	$\overline{RD}$ rising edge to $\overline{CS}$ rising edge	2	ns min
t_{14A}	Disable delay $\overline{RD}$ high to data high-Z	16	ns min
t_{14B}	Disable delay $\overline{CS}$ high to data high-Z	16	ns min
t_{15}	Delay between rising edge of $\overline{RD}$ and falling edge of $\overline{WR}/\overline{FSYNC}$	2	ns min
t_{16}	$\overline{SAMPLE}$ pulse width	$2 \times t_{CK} + 20$	ns min
t_{17}	Delay from $\overline{SAMPLE}$ before $\overline{RD}/\overline{CS}$ low	$6 \times t_{CK} + 20$	ns min
t_{18}	Hold time $\overline{RD}$ before $\overline{RD}$ low	2	ns min
t_{19}	Enable delay $\overline{RD}/\overline{CS}$ low to data valid		
	V_{DRIVE} = 4.5 V to 5.25 V	17	ns min
	V_{DRIVE} = 2.7 V to 3.6 V	21	ns min
	V_{DRIVE} = 2.3 V to 2.7 V	33	ns min
t_{20}	$\overline{RD}$ pulse width	6	ns min
t_{21}	A0 and A1 set time to data valid when $\overline{RD}/\overline{CS}$ low		
	V_{DRIVE} = 4.5 V to 5.25 V	36	ns min
	V_{DRIVE} = 2.7 V to 3.6 V	37	ns min
	V_{DRIVE} = 2.3 V to 2.7 V	29	ns min
t_{22}	Delay $\overline{WR}/\overline{FSYNC}$ falling edge to SCLK rising edge	3	ns min
t_{23}	Delay $\overline{WR}/\overline{FSYNC}$ falling edge to SDO release from high-Z		
	V_{DRIVE} = 4.5 V to 5.25 V	16	ns min
	V_{DRIVE} = 2.7 V to 3.6 V	26	ns min
	V_{DRIVE} = 2.3 V to 2.7 V	29	ns min
t_{24}	Delay SCLK rising edge to DBx valid		
	V_{DRIVE} = 4.5 V to 5.25 V	24	ns min
	V_{DRIVE} = 2.7 V to 3.6 V	18	ns min
	V_{DRIVE} = 2.3 V to 2.7 V	32	ns min
t_{25}	SCLK high time	$0.4 \times t_{SCLK}$	ns min
t_{26}	SCLK low time	$0.4 \times t_{SCLK}$	ns min
t_{27}	SDI setup time prior to SCLK falling edge	3	ns min
t_{28}	SDI hold time after SCLK falling edge	2	ns min

Parameter	Description	Limit at T_{MIN}, T_{MAX}	Unit
t_{29}	Delay $\overline{WR}/\overline{FSYNC}$ rising edge to SDO high-Z	15	ns min
t_{30}	Delay from $\overline{SAMPLE}$ before $\overline{WR}/\overline{FSYNC}$ falling edge	$6 \times t_{CK} + 20$ ns	ns min
t_{31}	Delay $\overline{CS}$ falling edge to $\overline{WR}/\overline{FSYNC}$ falling edge in normal mode	2	ns min
t_{32}	A0 and A1 setup time before $\overline{WR}/\overline{FSYNC}$ falling edge	2	ns min
t_{33}	A0 and A1 hold time after $\overline{WR}/\overline{FSYNC}$ falling edge[2]		
	In normal mode, A0 = 0, A1 = 0/1	$24 \times t_{CK} + 5$ ns	ns min
	In configuration mode, A0 = 1, A1 = 1	$8 \times t_{CK} + 5$ ns	ns min
t_{34}	Delay $\overline{WR}/\overline{FSYNC}$ rising edge to $\overline{WR}/\overline{FSYNC}$ falling edge	10	ns min
f_{SCLK}	Frequency of SCLK input		
	V_{DRIVE} = 4.5 V to 5.25 V	20	MHz
	V_{DRIVE} = 2.7 V to 3.6 V	25	MHz
	V_{DRIVE} = 2.3 V to 2.7 V	15	MHz

[1] Temperature ranges are as follows: A, B grades: −40°C to +85°C; C, D grades: −40°C to +125°C.
[2] A0 and A1 should remain constant for the duration of the serial readback. This may require 24 clock periods to read back the 8-bit fault information in addition to the 16 bits of position/velocity data. If the fault information is not required, A0/A1 may be released following 16 clock cycles.

ABSOLUTE MAXIMUM RATINGS

Table 3.

Parameter	Rating
AV_{DD} to AGND, DGND	−0.3 V to +7.0 V
DV_{DD} to AGND, DGND	−0.3 V to +7.0 V
V_{DRIVE} to AGND, DGND	−0.3 V to AV_{DD}
AV_{DD} to DV_{DD}	−0.3 V to +0.3 V
AGND to DGND	−0.3 V to +0.3 V
Analog Input Voltage to AGND	−0.3 V to AV_{DD} + 0.3 V
Digital Input Voltage to DGND	−0.3 V to V_{DRIVE} + 0.3 V
Digital Output Voltage to DGND	−0.3 V to V_{DRIVE} + 0.3 V
Analog Output Voltage Swing	−0.3 V to AV_{DD} + 0.3 V
Input Current to Any Pin Except Supplies[1]	±10 mA
Operating Temperature Range (Ambient)	
A, B Grades	−40°C to +85°C
C, D Grades	−40°C to +125°C
Storage Temperature Range	−65°C to +150°C
θ_{JA} Thermal Impedance[2]	54°C/W
θ_{JA} Thermal Impedance[2]	15°C/W
RoHS-Compliant Temperature, Soldering Reflow	260(−5/+0)°C
ESD	2 kV HBM

[1] Transient currents of up to 100 mA do not cause latch-up.
[2] JEDEC 2S2P standard board.

Stresses above those listed under Absolute Maximum Ratings may cause permanent damage to the device. This is a stress rating only; functional operation of the device at these or any other conditions above those indicated in the operational section of this specification is not implied. Exposure to absolute maximum rating conditions for extended periods may affect device reliability.

ESD CAUTION

ESD (electrostatic discharge) sensitive device. Charged devices and circuit boards can discharge without detection. Although this product features patented or proprietary protection circuitry, damage may occur on devices subjected to high energy ESD. Therefore, proper ESD precautions should be taken to avoid performance degradation or loss of functionality.

PIN CONFIGURATION AND FUNCTION DESCRIPTIONS

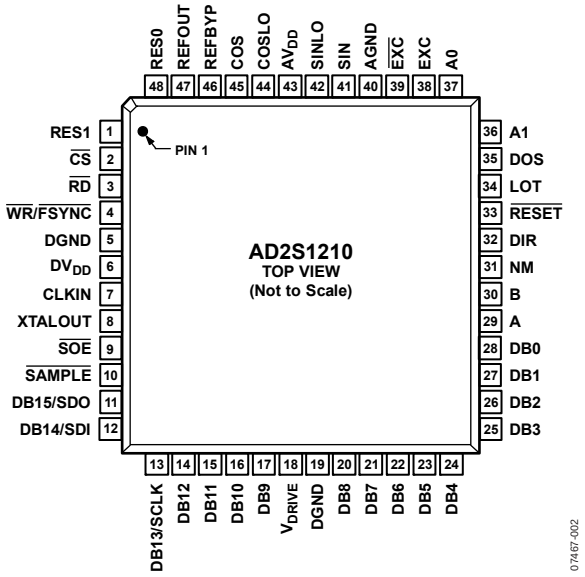

Figure 2. Pin Configuration

Table 4. Pin Function Descriptions

Pin No.	Mnemonic	Description
1	RES1	Resolution Select 1. Logic input. RES1 in conjunction with RES0 allows the resolution of the AD2S1210 to be programmed. Refer to the Configuration of AD2S1210 section.
2	$\overline{CS}$	Chip Select. Active low logic input. The device is enabled when $\overline{CS}$ is held low.
3	$\overline{RD}$	Edge-Triggered Logic Input. When the $\overline{SOE}$ pin is high, this pin acts as a frame synchronization signal and output enable for the parallel data outputs, DB15 to DB0. The output buffer is enabled when $\overline{CS}$ and $\overline{RD}$ are held low. When the $\overline{SOE}$ pin is low, the $\overline{RD}$ pin should be held high.
4	$\overline{WR}/\overline{FSYNC}$	Edge-Triggered Logic Input. When the $\overline{SOE}$ pin is high, this pin acts as a frame synchronization signal and input enable for the parallel data inputs, DB7 to DB0. The input buffer is enabled when $\overline{CS}$ and $\overline{WR}/\overline{FSYNC}$ are held low. When the $\overline{SOE}$ pin is low, the $\overline{WR}/\overline{FSYNC}$ pin acts as a frame synchronization signal and enable for the serial data bus.
5, 19	DGND	Digital Ground. These pins are ground reference points for digital circuitry on the AD2S1210. Refer all digital input signals to this DGND voltage. Both of these pins can be connected to the AGND plane of a system. The DGND and AGND voltages should ideally be at the same potential and must not be more than 0.3 V apart, even on a transient basis.
6	DV_{DD}	Digital Supply Voltage, 4.75 V to 5.25 V. This is the supply voltage for all digital circuitry on the AD2S1210. The AV_{DD} and DV_{DD} voltages ideally should be at the same potential and must not be more than 0.3 V apart, even on a transient basis.
7	CLKIN	Clock Input. A crystal or oscillator can be used at the CLKIN and XTALOUT pins to supply the required clock frequency of the AD2S1210. Alternatively, a single-ended clock can be applied to the CLKIN pin. The input frequency of the AD2S1210 is specified from 6.144 MHz to 10.24 MHz.
8	XTALOUT	Crystal Output. When using a crystal or oscillator to supply the clock frequency to the AD2S1210, apply the crystal across the CLKIN and XTALOUT pins. When using a single-ended clock source, the XTALOUT pin should be considered a no connect pin.
9	$\overline{SOE}$	Serial Output Enable. Logic input. This pin enables either the parallel or serial interface. The serial interface is selected by holding the $\overline{SOE}$ pin low, and the parallel interface is selected by holding the $\overline{SOE}$ pin high.
10	$\overline{SAMPLE}$	Sample Result. Logic input. Data is transferred from the position and velocity integrators to the position and velocity registers, after a high-to-low transition on the $\overline{SAMPLE}$ signal. The fault register is also updated after a high-to-low transition on the $\overline{SAMPLE}$ signal.
11	DB15/SDO	Data Bit 15/Serial Data Output Bus. When the $\overline{SOE}$ pin is high, this pin acts as DB15, a three-state data output pin controlled by $\overline{CS}$ and $\overline{RD}$. When the $\overline{SOE}$ pin is low, this pin acts as SDO, the serial data output bus controlled by $\overline{CS}$ and $\overline{WR}/\overline{FSYNC}$. The bits are clocked out on the rising edge of SCLK.
12	DB14/SDI	Data Bit 14/Serial Data Input Bus. When the $\overline{SOE}$ pin is high, this pin acts as DB14, a three-state data output pin controlled by $\overline{CS}$ and $\overline{RD}$. When the $\overline{SOE}$ pin is low, this pin acts as SDI, the serial data input bus controlled by $\overline{CS}$ and $\overline{WR}/\overline{FSYNC}$. The bits are clocked in on the falling edge of SCLK.

Pin No.	Mnemonic	Description
13	DB13/SCLK	Data Bit 13/Serial Clock. In parallel mode, this pin acts as DB13, a three-state data output pin controlled by $\overline{CS}$ and $\overline{RD}$. In serial mode, this pin acts as the serial clock input.
14 to 17	DB12 to DB9	Data Bit 12 to Data Bit 9. Three-state data output pins controlled by $\overline{CS}$ and $\overline{RD}$.
18	V_{DRIVE}	Logic Power Supply Input. The voltage supplied at this pin determines at what voltage the interface operates. Decouple this pin to DGND. The voltage range on this pin is 2.3 V to 5.25 V and may be different to the voltage range at AV_{DD} and DV_{DD} but should never exceed either by more than 0.3 V.
20	DB8	Data Bit 8. Three-state data output pin controlled by $\overline{CS}$ and $\overline{RD}$.
21 to 28	DB7 to DB0	Data Bit 7 to Data Bit 0. Three-state data input/output pins controlled by $\overline{CS}$, $\overline{RD}$, and $\overline{WR}$/$\overline{FSYNC}$.
29	A	Incremental Encoder Emulation Output A. Logic output. This output is free running and is valid if the resolver format input signals applied to the converter are valid.
30	B	Incremental Encoder Emulation Output B. Logic output. This output is free running and is valid if the resolver format input signals applied to the converter are valid.
31	NM	North Marker Incremental Encoder Emulation Output. Logic output. This output is free running and is valid if the resolver format input signals applied to the converter are valid.
32	DIR	Direction. Logic output. This output is used in conjunction with the incremental encoder emulation outputs. The DIR output indicates the direction of the input rotation and is high for increasing angular rotation.
33	$\overline{RESET}$	Reset. Logic input. The AD2S1210 requires an external reset signal to hold the $\overline{RESET}$ input low until V_{DD} is within the specified operating range of 4.75 V to 5.25 V.
34	LOT	Loss of Tracking. Logic output. LOT is indicated by a logic low on the LOT pin and is not latched. Refer to the Loss of Position Tracking Detection section.
35	DOS	Degradation of Signal. Logic output. Degradation of signal (DOS) is detected when either resolver input (sine or cosine) exceeds the specified DOS sine/cosine threshold or when an amplitude mismatch occurs between the sine and cosine input voltages. DOS is indicated by a logic low on the DOS pin. Refer to the Signal Degradation Detection section.
36	A1	Mode Select 1. Logic input. A1 in conjunction with A0 allows the mode of the AD2S1210 to be selected. Refer to the Configuration of AD2S1210 section.
37	A0	Mode Select 0. Logic input. A0 in conjunction with A1 allows the mode of the AD2S1210 to be selected. Refer to the Configuration of AD2S1210 section.
38	EXC	Excitation Frequency. Analog output. An on-board oscillator provides the sinusoidal excitation signal (EXC) and its complement signal ($\overline{EXC}$) to the resolver. The frequency of this reference signal is programmable via the excitation frequency register.
39	$\overline{EXC}$	Excitation Frequency Complement. Analog output. An on-board oscillator provides the sinusoidal excitation signal (EXC) and its complement signal ($\overline{EXC}$) to the resolver. The frequency of this reference signal is programmable via the excitation frequency register.
40	AGND	Analog Ground. This pin is the ground reference points for analog circuitry on the AD2S1210. Refer all analog input signals and any external reference signal to this AGND voltage. Connect the AGND pin to the AGND plane of a system. The AGND and DGND voltages should ideally be at the same potential and must not be more than 0.3 V apart, even on a transient basis.
41	SIN	Positive Analog Input of Differential SIN/SINLO Pair. The input range is 2.3 V p-p to 4.0 V p-p.
42	SINLO	Negative Analog Input of Differential SIN/SINLO Pair. The input range is 2.3 V p-p to 4.0 V p-p.
43	AV_{DD}	Analog Supply Voltage, 4.75 V to 5.25 V. This pin is the supply voltage for all analog circuitry on the AD2S1210. The AV_{DD} and DV_{DD} voltages ideally should be at the same potential and must not be more than 0.3 V apart, even on a transient basis.
44	COSLO	Negative Analog Input of Differential COS/COSLO Pair. The input range is 2.3 V p-p to 4.0 V p-p.
45	COS	Positive Analog Input of Differential COS/COSLO Pair. The input range is 2.3 V p-p to 4.0 V p-p.
46	REFBYP	Reference Bypass. Connect reference decoupling capacitors at this pin. Typical recommended values are 10 µF and 0.01 µF.
47	REFOUT	Voltage Reference Output.
48	RES0	Resolution Select 0. Logic input. RES0 in conjunction with RES1 allows the resolution of the AD2S1210 to be programmed. Refer to the Configuration of AD2S1210 section.

TYPICAL PERFORMANCE CHARACTERISTICS

T_A = 25°C, AV_{DD} = DV_{DD} = V_{DRIVE} = 5 V, SIN/SINLO = 3.15 V p-p, COS/COSLO = 3.15 V p-p, CLKIN = 8.192 MHz , unless otherwise noted.

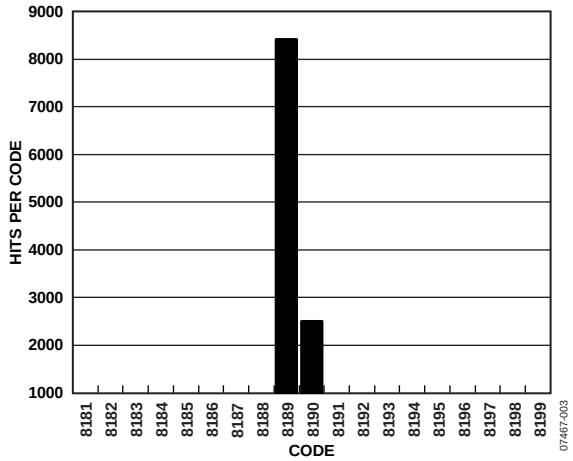

Figure 3. Typical 16-Bit Angular Accuracy Histogram Of Codes, 10,000 Samples

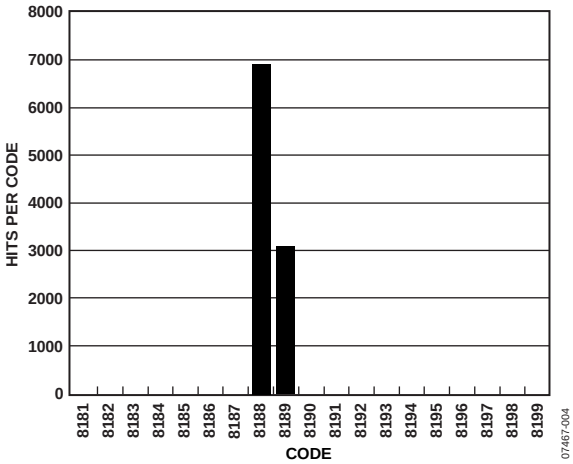

Figure 4. Typical 14-Bit Angular Accuracy Histogram of Codes, 10,000 Samples, Hysteresis Disabled

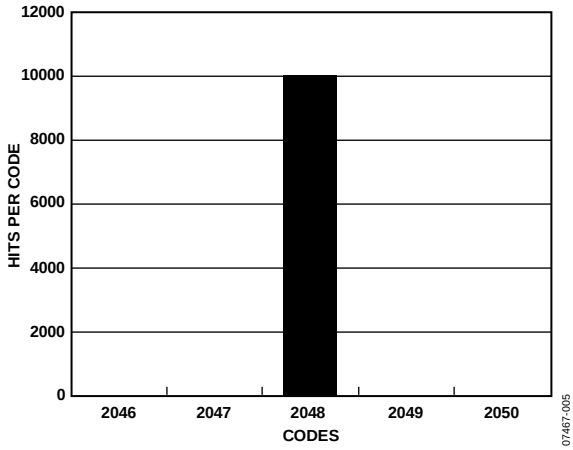

Figure 5. Typical 14-Bit Angular Accuracy Histogram of Codes, 10,000 Samples, Hysteresis Enabled

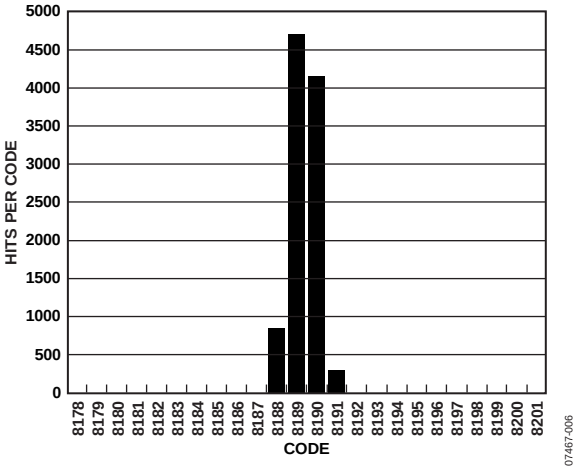

Figure 6. Typical 12-Bit Angular Accuracy Histogram of Codes, 10,000 Samples, Hysteresis Disabled

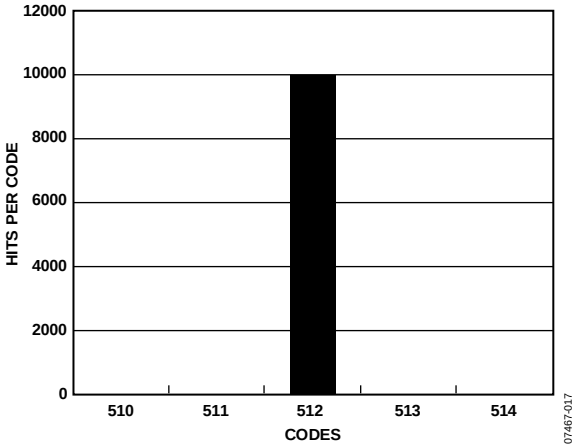

Figure 7. Typical 12-Bit Angular Accuracy Histogram of Codes, 10,000 Samples, Hysteresis Enabled

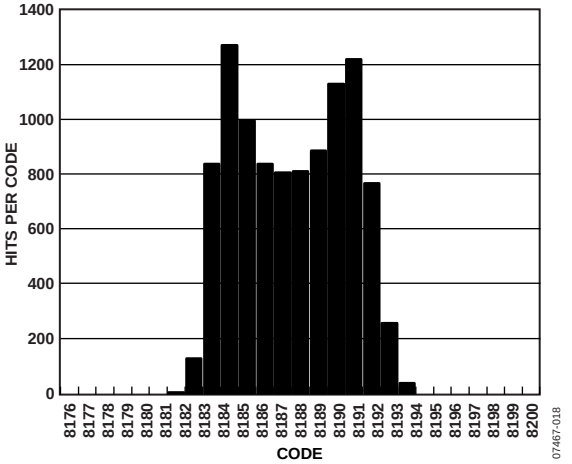

Figure 8. Typical 10-Bit Angular Accuracy Histogram of Codes, 10,000 Samples, Hysteresis Disabled

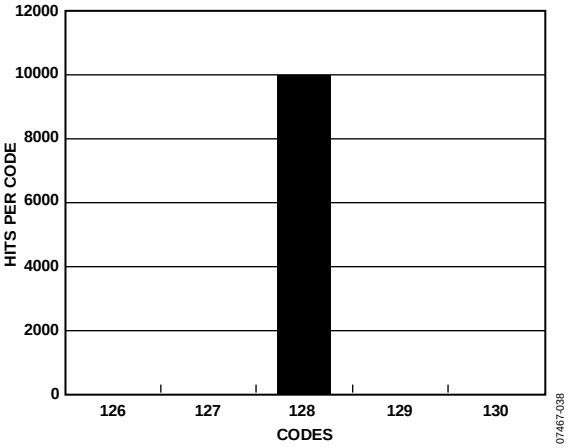

Figure 9. Typical 10-Bit Angular Accuracy Histogram of Codes, 10,000 Samples, Hysteresis Enabled

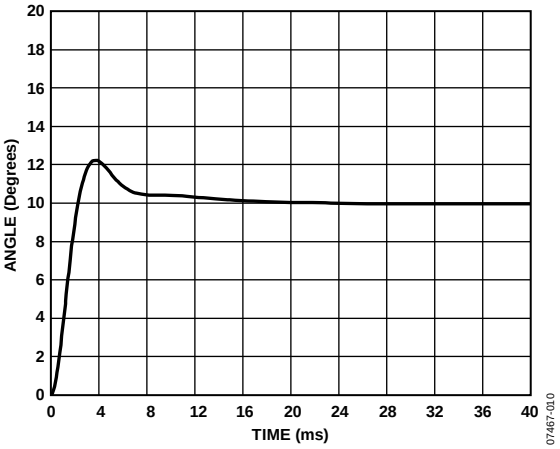

Figure 10. Typical 16-Bit 10° Step Response

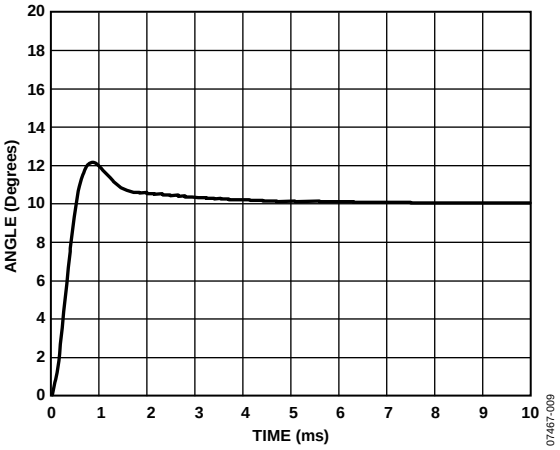

Figure 11. Typical 14-Bit 10° Step Response

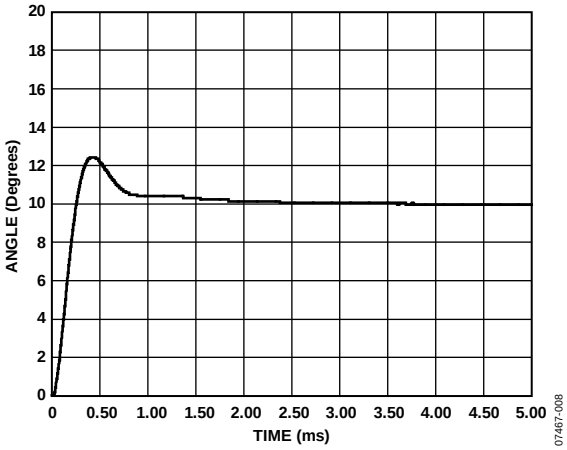

Figure 12. Typical 12-Bit 10° Step Response

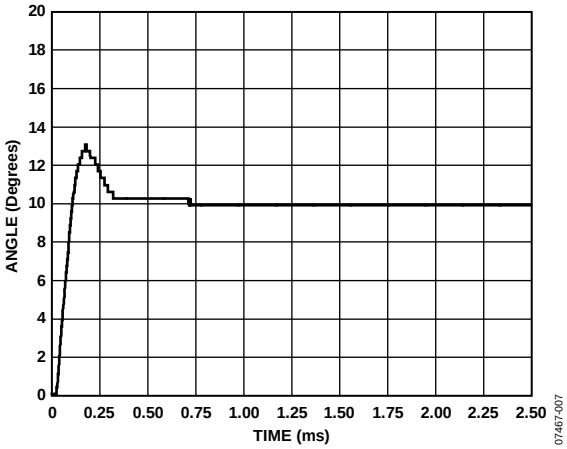

Figure 13. Typical 10-Bit 10° Step Response

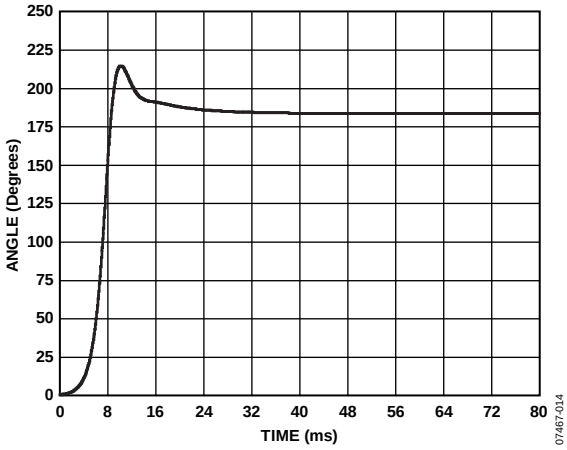

Figure 14. Typical 16-Bit 179° Step Response

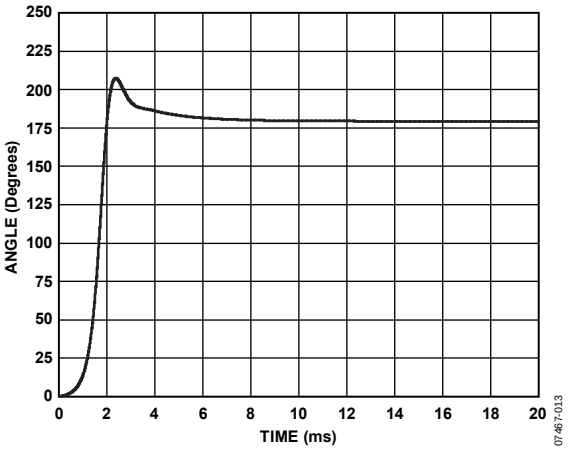

Figure 15. Typical 14-Bit 179° Step Response

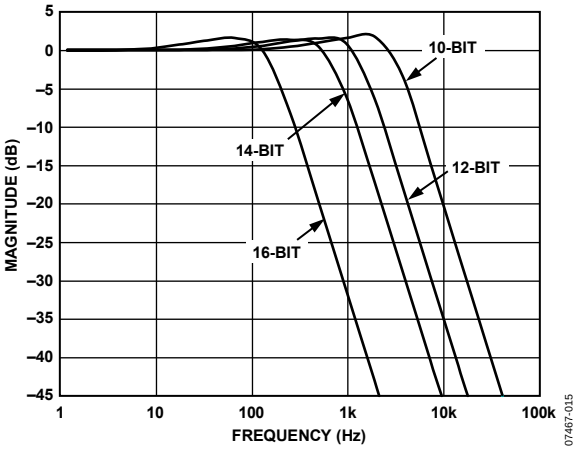

Figure 18. Typical System Magnitude Response

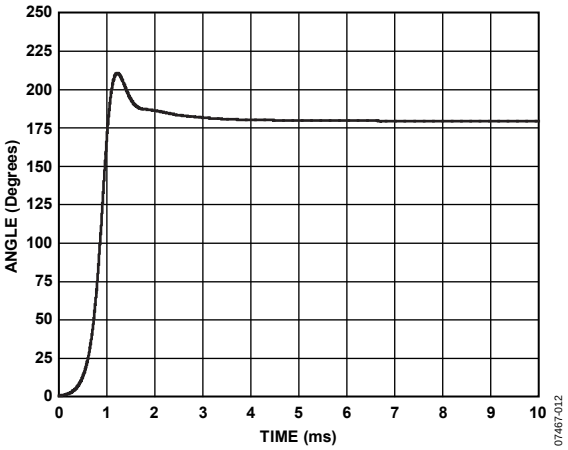

Figure 16. Typical 12-Bit 179° Step Response

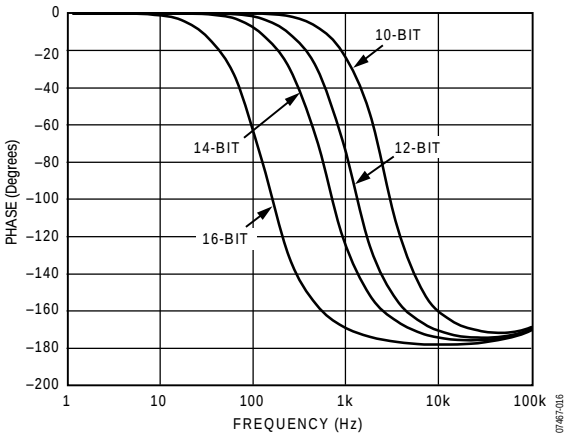

Figure 19. Typical System Phase Response

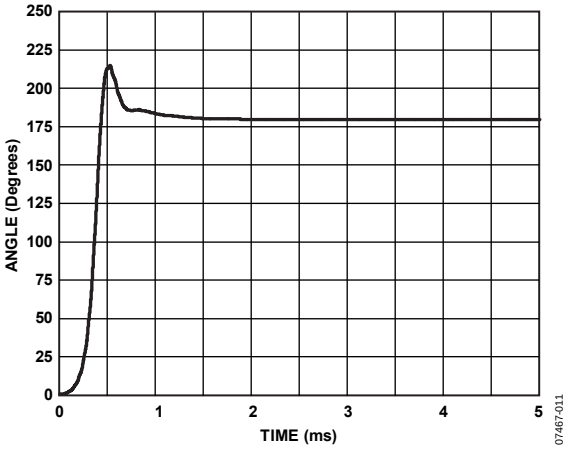

Figure 17. Typical 10-Bit 179° Step Response

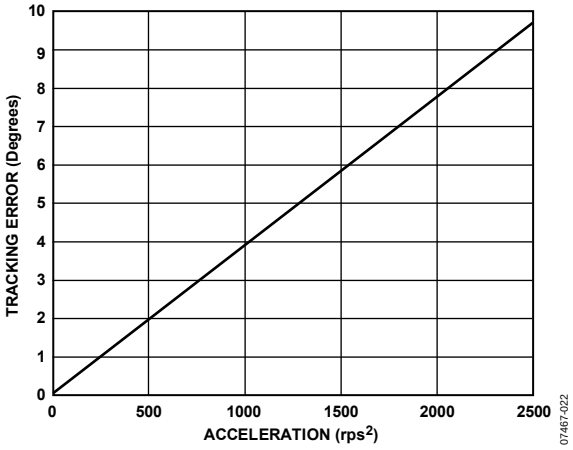

Figure 20. Typical 16-Bit Tracking Error vs. Acceleration

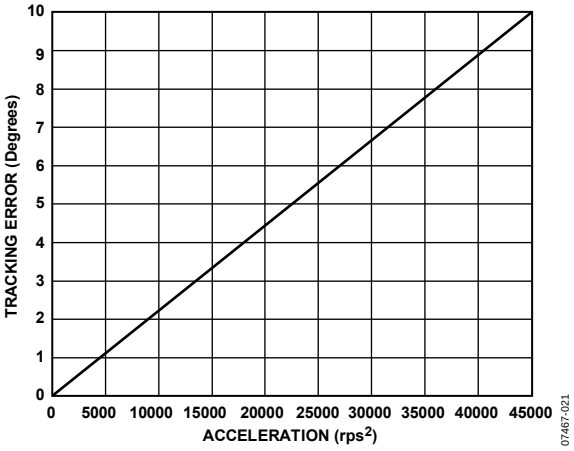

Figure 21. Typical 14-Bit Tracking Error vs. Acceleration

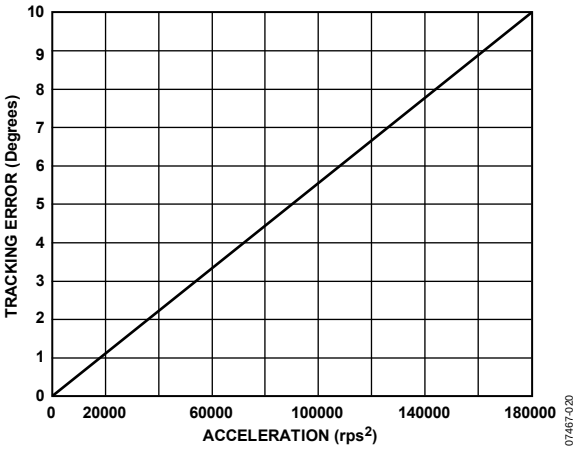

Figure 22. Typical 12-Bit Tracking Error vs. Acceleration

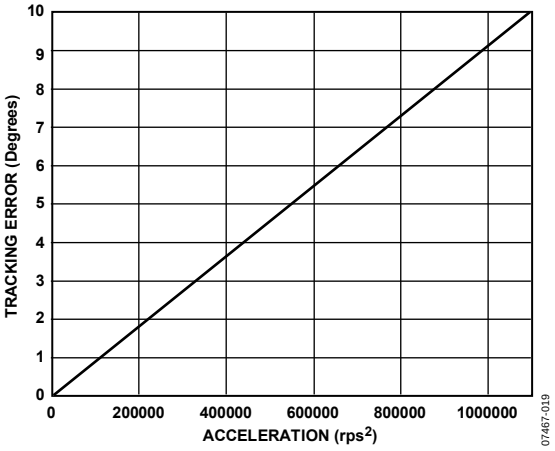

Figure 23. Typical 10-Bit Tracking Error vs. Acceleration

RESOLVER FORMAT SIGNALS

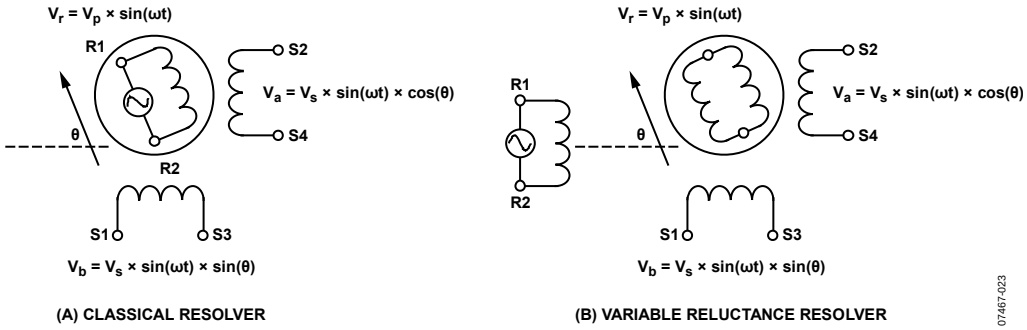

Figure 24. Classical Resolver vs. Variable Reluctance Resolver

A resolver is a rotating transformer, typically with a primary winding on the rotor and two secondary windings on the stator. In the case of a variable reluctance resolver, there are no windings on the rotor, as shown in Figure 24. The primary winding is on the stator as well as the secondary windings, but the saliency in the rotor design provides the sinusoidal variation in the secondary coupling with the angular position. Either way, the resolver output voltages (S3 – S1, S2 – S4) have the same equations, as shown in Equation 1.

$$S3 - S1 = E_0 \sin \omega t \times \sin \theta$$
$$S2 - S4 = E_0 \sin \omega t \times \cos \theta \qquad (1)$$

where:
θ is the shaft angle.
$Sin\omega t$ is the rotor excitation frequency.
E_0 is the rotor excitation amplitude.

The stator windings are displaced mechanically by 90° (see Figure 24). The primary winding is excited with an ac reference. The amplitude of subsequent coupling onto the stator secondary windings is a function of the position of the rotor (shaft) relative to the stator. The resolver, therefore, produces two output voltages (S3 – S1, S2 – S4) modulated by the sine and cosine of shaft angle. Resolver format signals refer to the signals derived from the output of a resolver, as shown in Equation 1. Figure 25 illustrates the output format.

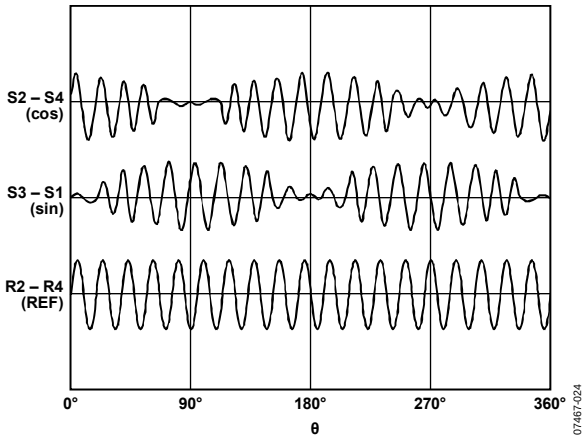

Figure 25. Electrical Resolver Representation

THEORY OF OPERATION

RESOLVER TO DIGITAL CONVERSION

The AD2S1210 operates on a Type II tracking closed-loop principle. The output continually tracks the position of the resolver without the need for external conversion and wait states. As the resolver moves through a position equivalent to the least significant bit weighting, the output is updated by one LSB.

The converter tracks the shaft angle θ by producing an output angle ϕ that is fed back and compared to the input angle θ, and the resulting error between the two is driven towards 0 when the converter is correctly tracking the input angle. To measure the error, S3 − S1 is multiplied by cosϕ and S2 − S4 is multiplied by sinϕ to give

$$E_0 \sin \omega t \times \sin \theta \cos \phi \quad \text{(for S3 − S1)}$$

$$E_0 \sin \omega t \times \cos \theta \sin \phi \quad \text{(for S2 − S4)}$$

The difference is taken, giving

$$E_0 \sin \omega t \times (\sin \theta \cos \phi - \cos \theta \sin \phi) \tag{2}$$

This signal is demodulated using the internally generated synthetic reference, yielding

$$E_0 (\sin \theta \cos \phi - \cos \theta \sin \phi) \tag{3}$$

Equation 3 is equivalent to $E_0 \sin(\theta - \phi)$, which is approximately equal to $E_0(\theta - \phi)$ for small values of θ − ϕ, where θ − ϕ = angular error.

The value E_0 (θ − ϕ) is the difference between the angular error of the rotor and the digital angle output of the converter.

A phase-sensitive demodulator, some integrators, and a compensation filter form a closed-loop system that seeks to null the error signal. When this is accomplished, ϕ equals the Resolver Angle θ within the rated accuracy of the converter. A Type II tracking loop is used so that constant velocity inputs can be tracked without inherent error.

FAULT DETECTION CIRCUIT

The AD2S1210 fault detection circuit can sense loss of resolver signals, out-of-range input signals, input signal mismatch, or loss of position tracking; however, in the event of a fault, the position indicated by the AD2S1210 may differ significantly from the actual shaft position of the resolver.

Monitor Signal

The AD2S1210 generates a monitor signal by comparing the angle in the position register to the incoming sine and cosine signals from the resolver. The monitor signal is created in a similar fashion to the error signal described in the Resolver to Digital Conversion section. The incoming signals, sinθ and cosθ, are multiplied by the sin and cos of the output angle, respectively, and then added together.

$$Monitor = A1 \times \sin \theta \times \sin \phi + A2 \times \cos \theta \times \cos \phi \tag{4}$$

where:
A1 is the amplitude of the incoming sine signal (A1 × sinθ).
A2 is the amplitude of the incoming cosine signal (A2 × cosθ).
θ is the resolver angle.
ϕ is the angle stored in the position register.

Note that Equation 4 is shown after demodulation, with the Carrier Signal sinωt removed. Also, note that for matched input signal (that is, a no fault condition), A1 = A2.

When A1 = A2 and the converter is tracking (θ = ϕ), the monitor signal output has a constant magnitude of A1 (Monitor = A1 × ($\sin^2 \theta + \cos^2 \theta$) = A1), which is independent of shaft angle. When A1 ≠ A2, the monitor signal magnitude varies between A1 and A2 at twice the rate of shaft rotation. The monitor signal is used as described in the following sections to detect degradation or loss of input signals.

Loss of Signal Detection

The AD2S1210 indicates that a loss of signal (LOS) has occurred for four separate conditions.

- When either resolver input (sine or cosine) falls below the specified LOS sine/cosine threshold. This threshold is defined by the user and is set by writing to the internal register, Address 0x88 (see the Register Map section).
- When any of the resolver input pins (SIN, SINLO, COS, or COSLO) are disconnected from the sensor.
- When any of the resolver input pins (SIN, SINLO, COS, or COSLO) are clipping the power rail or ground rail of the AD2S1210. Refer to the Sine/Cosine Input Clipping section.
- When a configuration parity error has occurred. Refer to the Configuration Parity Error section.

A loss of signal is caused if either of the stator windings of the resolver (sine or cosine) are open circuit or have a number of shorted turns. LOS is indicated by both the DOS and LOT pins latching as logic low outputs. The DOS and LOT pins are reset to a no fault state when the user enters configuration mode and reads the fault register. The LOS condition has priority over both the DOS and LOT conditions, as shown in Table 6. To determine the cause of the LOS fault detection, the user must read the fault register, Address 0xFF (see the Register Map section).

When a loss of signal is detected due to the resolver inputs (sine or cosine) falling below the specified LOS sine/cosine threshold, the electrical angle through which the resolver may rotate before the LOS can be detected by the AD2S1210 is referred to as the LOS angular latency. This is defined by the specified LOS sine/cosine threshold set by the user and the maximum amplitude of the input signals being applied to the AD2S1210. The worst-case angular latency can be calculated as follows:

$$Angular\ Latency = 2 \times Arc\cos\left[\frac{LOS\ threshold}{\max\ sine/cosine\ amplitude}\right] \quad (5)$$

The preceding equation is based on the worst-case angular error, which can be seen by the AD2S1210 before an LOS fault is indicated. This occurs if one of the resolver input signals, either sine or cosine, is lost while the remaining signal is at its peak amplitude, for example, if the sine input is lost while the input angle is 90°. The worst-case angular latency is twice the worst-case angular error.

Signal Degradation Detection

The AD2S1210 indicates that a degradation of signal (DOS) has occurred for two separate conditions.

- When either resolver input (sine or cosine) exceeds the specified DOS sine/cosine threshold. This threshold is defined by the user and is set by writing to the internal register, Address 0x89 (see the Register Map section).
- When the amplitudes of the input signals, sine and cosine, mismatch by more than the specified DOS sine/cosine mismatch threshold. This threshold is defined by the user and is set by writing to the internal register, Address 0x8A (see the Register Map section). The AD2S1210 continuously stores the minimum and maximum magnitude of the monitor signal in internal registers. The difference between the minimum and maximum is calculated to determine if a DOS mismatch has occurred. The initial values for the minimum and maximum internal registers must be defined by the user, at Address 0x8C and Address 0x8B, respectively (see the Register Map section).

DOS is indicated by a logic low on the DOS pin. When DOS is indicated, the output is latched low until the user enters configuration mode and reads the fault register. The DOS condition has priority over the LOT condition, as shown in Table 6. To determine the cause of the DOS fault detection, the user must read the fault register, Address 0xFF (see the Register Map section).

Time Latency for LOS and DOS Detection

Note that the monitor signal is generated on the active edge of the internal AD2S1210 clock. The internal clock is generated by dividing the externally applied CLKIN frequency by 2; for example, when using a CLKIN frequency of 8.192 MHz the internal AD2S1210 clock is 4.096 MHz. The AD2S1210 continuously stores the minimum and maximum magnitude of the monitor signal in internal registers. The values stored in these internal registers are compared to the LOS and DOS thresholds configured by the user at set intervals. This interval, known as the window counter period, is dependent on the excitation frequency configured by the user. It is set to ensure that two window counter periods include at least one full period of the excitation frequency applied to the resolver. The window counter period is defined in terms of internal clock cycles. The window counter periods for the range of excitation frequencies on the AD2S1210 are outlined in Table 5.

Table 5. Window Counter Period vs. Excitation Frequency Range, CLKIN = 8.192 MHz

Excitation Frequency Range	Number of Internal Clock Cycles	Window Counter Period (µs)[1]
2 kHz ≤ Exc Freq < 4 kHz	1065	260
4 kHz ≤ Exc Freq < 8 kHz	554	135.25
8 kHz ≤ Exc Freq ≤ 20 kHz	256	62.5

[1] CLKIN = 8.192 MHz. The window counter period scales with clock frequency and can be calculated by multiplying the number of internal clock cycles by the period of the internal clock frequency, that is, CLKIN/2.

The AD2S1210 detects an LOS or DOS due to the resolver inputs (sine or cosine) falling below or exceeding the LOS and DOS thresholds within two window counter periods. For example, with an excitation frequency of 10 kHz, a fault is detected within 125 µs. A persistent fault is detected within one window counter period of the reading and clearing the fault register.

Note that the time latency to detect the occurrence of a DOS mismatch fault is dependent on the speed of rotation of the resolver. The worst-case time latency to detect a DOS mismatch fault is the time required for one full rotation of the resolver.

Loss of Position Tracking Detection

The AD2S1210 indicates that a loss of tracking (LOT) has occurred when

- The internal error signal of the AD2S1210 has exceeded the specified angular threshold. This threshold is defined by the user and is set by writing to the internal register, Address 0x8D (see the Register Map section).
- The input signal exceeds the maximum tracking rate. The maximum tracking rate depends on the resolution defined by the user and the CLKIN frequency.

LOT is indicated by a logic low on the LOT pin and is not latched. LOT has hysteresis and is not cleared until the internal error signal is less than the value defined in the LOT low threshold register, Address 0x8E (see the Register Map section).

When the maximum tracking rate is exceeded, LOT is cleared only if the velocity is less than the maximum tracking rate and the internal error signal is less than the value defined in the LOT low threshold register. LOT can be indicated for step changes in position (such as after a $\overline{\text{RESET}}$ signal is applied to the AD2S1210). It is also useful as a built-in test to indicate that the tracking converter is functioning properly. The LOT condition has lower priority than both the DOS and LOS conditions, as shown in Table 6. The LOT and DOS conditions cannot be indicated using the LOT and DOS pins at the same time. However, both conditions are indicated separately in the fault register. To determine the cause of the LOT fault detection, the user must read the fault register, Address 0xFF (see the Register Map section).

Table 6. Fault Detection Decoding

Condition	DOS Pin	LOT Pin	Order of Priority
Loss of Signal (LOS)	0	0	1
Degradation of Signal (DOS)	0	1	2
Loss of Tracking (LOT)	1	0	3
No Fault	1	1	N/A

Sine/Cosine Input Clipping

The AD2S1210 indicates that a clipping error has occurred if any of the resolver input pins (SIN, SINLO, COS, or COSLO) are clipping the power rail or ground rail of the AD2S1210. The clipping fault is indicated if the input amplitudes are less than 0.15 V or greater then AV_{DD} − 0.2 V for more than 4 µs.

Sine/cosine input clipping error is indicated by both the DOS and LOT pins latching as logic low outputs. Sine/cosine input clipping error is also indicated by Bit D7 of the fault register being set high. The DOS and LOT pins are reset to a no fault state when the user enters configuration mode and reads the fault register.

Configuration Parity Error

The AD2S1210 includes a number of user programmable registers that allow the user to configure the part. Each read/write register on the AD2S1210 is programmed with seven bits of information by the user. The 8th bit is reserved as a parity error bit. In the event that the data within these registers becomes corrupted, the AD2S1210 indicates that a configuration parity error has occurred. Configuration parity error is indicated by both the DOS and LOT pins latching as logic low outputs. Configuration parity error is also indicated by Bit D0 of the fault register being set high. In the event that a parity error occurs, it is recommended that the user reset the part using the $\overline{\text{RESET}}$ pin.

Phase Lock Error

The AD2S1210 indicates that a phase lock error has occurred if the difference between the phase of the excitation frequency and the phase of the sine and cosine signals exceeds the specified phase lock range. Phase lock error is indicated by a logic low on the LOT pin and is not latched. Phase lock error is also indicated by Bit D1 of the fault register being set high.

ON-BOARD PROGRAMMABLE SINUSOIDAL OSCILLATOR

An on-board oscillator provides the sinusoidal excitation signal (EXC) to the resolver as well as its complemented signal ($\overline{\text{EXC}}$). The frequency of this reference signal is programmable to a number of standard frequencies between 2 kHz and 20 kHz. The amplitude of this signal is 3.6 V p-p and is centered on 2.5 V.

The reference excitation output of the AD2S1210 needs an external buffer amplifier to provide gain and the additional current to drive a resolver.

The AD2S1210 also provides an internal synthetic reference signal that is phase locked to its sine and cosine inputs. Phase errors between the resolver primary and secondary windings can degrade the accuracy of the RDC and are compensated by this synchronous reference signal. This also compensates the phase shifts due to temperature and cabling and eliminates the need of an external preset phase compensation circuit.

SYNTHETIC REFERENCE GENERATION

When a resolver undergoes a high rotation rate, the RDC tends to act as an electric motor and produces speed voltages, along with the ideal sine and cosine outputs. These speed voltages are in quadrature to the main signal waveform. Moreover, nonzero resistance in the resolver windings causes a nonzero phase shift between the reference input and the sine and cosine outputs. The combination of speed voltages and phase shift causes a tracking error in the RDC that is approximated by

$$Error = Phase\,Shift \times \frac{Rotation\,Rate}{Reference\,Frequency} \quad (6)$$

To compensate for the described phase error between the resolver reference excitation and the sine/cosine signals, an internal synthetic reference signal is generated in phase with the reference frequency carrier. The synthetic reference is derived using the internally filtered sine and cosine signals. It is generated by determining the zero crossing of either the sine or cosine (whichever signal is larger, to improve phase accuracy) and evaluating the phase of the resolver reference excitation. The synthetic reference reduces the phase shift between the reference and sine/cosine inputs to less than 10°, and operates for phase shifts of ±44°. If additional phase lock range is required, Bit D5 in the control register can be set to zero to expand the phase lock range to 360° (see the Control Register section).

CONNECTING THE CONVERTER

Ground is connected to the AGND and DGND pins (see Figure 26). A positive power supply (V_{DD}) of 5 V dc ± 5% is connected to the AV_{DD} and DV_{DD} pins, with typical values for the decoupling capacitors being 10 nF and 4.7 µF. These capacitors are then placed as close to the device pins as possible and are connected to both AV_{DD} and DV_{DD}. The V_{DRIVE} pin is connected to the supply voltage of the microprocessor. The voltage applied to the V_{DRIVE} input controls the voltage of the parallel and serial interfaces. V_{DRIVE} can be set to 5 V, 3 V, or 2.5 V. Typical values for the V_{DRIVE} decoupling capacitors are 10 nF and 4.7 µF. Typical values for the oscillator decoupling capacitors are 20 pF, whereas typical values for the reference decoupling capacitors are 10 nF and 10 µF.

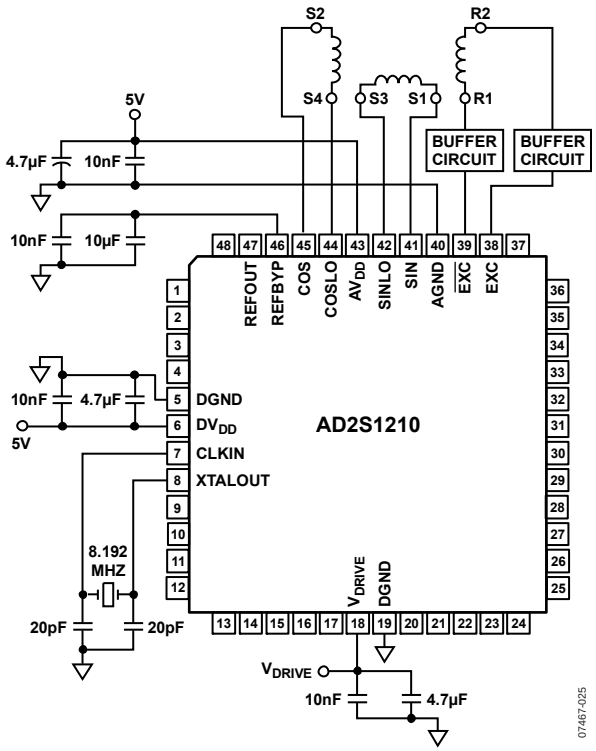

Figure 26. Connecting the AD2S1210 to a Resolver

In this recommended configuration, the converter introduces a $V_{REF}/2$ offset in the SIN, SINLO, COS, and COSLO signal outputs from the resolver. The sine and cosine signals can each be connected to a different potential relative to ground if the sine and cosine signals adhere to the recommended specifications. Note that because the EXC and $\overline{EXC}$ outputs are differential, there is an inherent gain of 2×.

Figure 27 shows a suggested buffer circuit. Capacitor C1 may be used in parallel with Resistor R2 to filter out any noise that may exist on the EXC and $\overline{EXC}$ outputs. Care should be taken when selecting the cutoff frequency of this filter to ensure that phase shifts of the carrier caused by the filter do not exceed the phase lock range of the AD2S1210.

The gain of the circuit is

$$Carrier\ Gain = -(R2/R1)\times(1/(1+R2\times C1\times\omega)) \quad (7)$$

and

$$V_{OUT} = \left(V_{REF}\times\left(1+\frac{R2}{R1}\right)\right)-\left(\frac{R2}{R1}\right)\times\left(\frac{1}{1+R2\times C1\times\omega}\right)V_{IN} \quad (8)$$

where:
ω is the radian frequency of the applied signal.
V_{REF}, a dc voltage, is set so that V_{OUT} is always a positive value, eliminating the need for a negative supply.

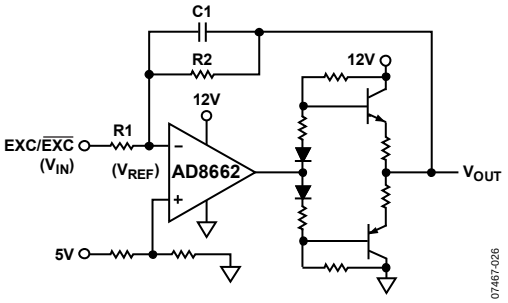

Figure 27. Buffer Circuit

A separate screened twisted pair cable is recommended for the analog input pins, SIN, SINLO, COS, and COSLO. The screens should terminate to either REFOUT or AGND.

CONFIGURATION OF AD2S1210

MODES OF OPERATION

The AD2S1210 has two modes of operation: configuration mode and normal mode. The configuration mode is used to program the registers that set the excitation frequency, the resolution, and the fault detection thresholds of the AD2S1210. Configuration mode is also used to read back the information in the fault register. The data in the position and velocity registers can also be read back while in configuration mode. The AD2S1210 can be operated entirely in configuration mode or, when the initial configuration is completed, the part can be taken out of configuration mode and operated in normal mode. When operating in normal mode, the data outputs can provide angular position or angular velocity data. The A0 and A1 inputs are used to determine whether the AD2S1210 is in configuration mode and to determine whether the position or velocity data is supplied to the output pins, see Table 8.

Setting the Excitation Frequency

The excitation frequency of the AD2S1210 is set by writing a frequency control word to the excitation frequency register, Address 0x91 (see the Register Map section).

$$Excitation\ Frequency = \frac{\left(FCW \times f_{CLKIN}\right)}{2^{15}}$$

where *FCW* is the frequency control word and f_{CLKIN} is the clock frequency of the AD2S1210.

The specified range of the excitation frequency is from 2 kHz to 20 kHz and can be set in increments of 250 Hz. To achieve the angular accuracy specifications in Table 1, the excitation frequency should be selected as outlined in Table 7.

Table 7. Recommended Excitation Frequency vs. Resolution (f_{CLKIN} = 8.192 MHz)

Resolution	Typical Bandwidth	Min Excitation Frequency	Max Excitation Frequency
10 Bits	4100 Hz	10 kHz	20 kHz
12 Bits	1700 Hz	6 kHz	20 kHz
14 Bits	900 Hz	3 kHz	12 kHz
16 Bits	250 Hz	2 kHz	10 kHz

Note that the recommended frequency range for each resolution and bandwidth, as outlined in Table 7, are defined for a clock frequency of 8.192 MHz. The recommended excitation frequency range scales with the clock frequency of the AD2S1210. The default excitation frequency of the AD2S1210 is 10 kHz when operated with a clock frequency of 8.192 MHz.

A0, A1 Inputs

The AD2S1210 allows the user to read the angular position or the angular velocity data directly from the parallel outputs or through the serial interface. The required information can be selected using the A0 and A1 inputs. These inputs should also be used to put the part into configuration mode. The data from the fault register and the remaining on-chip registers can be accessed in configuration mode.

Table 8. Configuration Mode Settings

A0	A1	Result
0	0	Normal mode—position output
0	1	Normal mode—velocity output
1	0	Reserved
1	1	Configuration mode

RES0, RES1 Inputs

In normal mode, the resolution of the digital output is selected using the RES0 and RES1 input pins. In configuration mode, the resolution is selected by setting the RES0 and RES1 bits in the control register. When switching between normal mode and configuration mode, it is the responsibility of the user to ensure that the resolution set in the control register matches the resolution set by the RES0 and RES1 input pins. Failure to do so may result in incorrect data on the outputs, caused by the differences between the resolution settings.

Table 9. Resolution Settings

RES0	RES1	Resolution (Bits)	Position LSB (Arc min)	Velocity LSB (rps)[1]
0	0	10	21.1	4.88
0	1	12	5.3	0.488
1	0	14	1.3	0.06
1	1	16	0.3	0.004

[1] CLKIN = 8.192 MHz. The velocity LSB size and maximum tracking rate scale linearly with the CLKIN frequency.

REGISTER MAP

Table 10. Register Map

Register Name	Register Address	Register Data	Read/Write Register
Position	0x80	D15 to D8	Read only
	0x81	D7 to D0	Read only
Velocity	0x82	D15 to D8	Read only
	0x83	D7 to D0	Read only
LOS Threshold	0x88	D7 to D0	Read/write
DOS Overrange Threshold	0x89	D7 to D0	Read/write
DOS Mismatch Threshold	0x8A	D7 to D0	Read/write
DOS Reset Max Threshold	0x8B	D7 to D0	Read/write
DOS Reset Min Threshold	0x8C	D7 to D0	Read/write
LOT High Threshold	0x8D	D7 to D0	Read/write
LOT Low Threshold	0x8E	D7 to D0	Read/write
Excitation Frequency	0x91	D7 to D0	Read/write
Control	0x92	D7 to D0	Read/write
Soft Reset	0xF0	D7 to D0	Write only
Fault	0xFF	D7 to D0	Read only

POSITION REGISTER

Table 11. 16-Bit Register

Address	Bit	Read/Write
0x80	D15 to D8	Read only
0x81	D7 to D0	Read only

The position register contains a digital representation of the angular position of the resolver input signals. The values are stored in 16-bit binary format. The value in the position register is updated following a falling edge on the $\overline{\text{SAMPLE}}$ input.

Note that with hysteresis enabled (see the Control Register section), at lower resolutions, the LSBs of the 16-bit digital output are set to zero. For example, at 10-bit resolution, Data Bit D15 to Data Bit D6 provide valid data; D5 to D0 are set to zero. With hysteresis disabled, the value stored in the position register is 16 bits regardless of resolution. At lower resolutions, the LSBs of the 16-bit digital output can be ignored. For example, at 10-bit resolution, Data Bit D15 to Data Bit D6 provide valid data; D5 to D0 can be ignored.

VELOCITY REGISTER

Table 12. 16-Bit Register

Address	Bit	Read/Write
0x82	D15 to D8	Read only
0x83	D7 to D0	Read only

The velocity register contains a digital representation of the angular velocity of the resolver input signals. The value in the velocity register is updated following a falling edge on the sample input. The values are stored in 16-bit, twos complement format. The maximum velocity that the AD2S1210 can track for each resolution is specified in Table 1. For example, the maximum tracking rate of the AD2S1210 at 16 bits resolution, with an 8.192 MHz input clock, is ±125 rps. A velocity of +125 rps results in 0x7FFF being stored in the velocity register; a velocity of −125 rps results in 0x8000 being stored in the velocity register.

The value stored in the velocity register is 16 bits regardless of resolution. At lower resolutions, the LSBs of the 16-bit digital output should be ignored. For example, at 10-bit resolution, Data Bit D15 to Data Bit D6 provide valid data; D5 to D0 should be ignored. The maximum tracking rate of the AD2S1210 at 10-bit resolution with an 8.192 MHz input clock is ±2500 rps. A velocity of +2500 rps results in 0x1FF being stored in Bit D15 to Bit D6 of the velocity register; a velocity of −2500 rps results in 0x3FF being stored in Bit D15 to Bit D6 of the velocity register. In this 10-bit example, the LSB size of the velocity output is 4.88 rps.

LOS THRESHOLD REGISTER

Table 13. 8-Bit Register

Address	Bit	Read/Write
0x88	D7 to D0	Read/write

The LOS threshold register determines the loss of signal threshold of the AD2S1210. The AD2S1210 allows the user to set the LOS threshold to a value between 0 V and 4.82 V. The resolution of the LOS threshold is seven bits, that is, 38 mV. Note that the MSB, D7, should be set to 0. The default value of the LOS threshold on power-up is 2.2 V.

DOS OVERRANGE THRESHOLD REGISTER

Table 14. 8-Bit Register

Address	Bit	Read/Write
0x89	D7 to D0	Read/write

The DOS overrange threshold register determines the degradation of signal threshold of the AD2S1210. The AD2S1210 allows the user to set the DOS overrange threshold to a value between 0 V and 4.82 V. The resolution of the DOS overrange threshold is seven bits, that is, 38 mV. Note that the MSB, D7, should be set to 0. The default value of the DOS overrange threshold on power-up is 4.1 V.

DOS MISMATCH THRESHOLD REGISTER

Table 15. 8-Bit Register

Address	Bit	Read/Write
0x8A	D7 to D0	Read/write

The DOS mismatch threshold register determines the signal mismatch threshold of the AD2S1210. The AD2S1210 allows the user to set the DOS mismatch threshold to a value between 0 V and 4.82 V. The resolution of the DOS mismatch threshold is seven bits, that is, 38 mV. Note that the MSB, D7, should be set to 0.The default value of the DOS mismatch threshold on power-up is 380 mV.

DOS RESET MAXIMUM AND MINIMUM THRESHOLD REGISTERS

Table 16. 8-Bit Registers

Address	Bit	Read/Write
0x8B	D7 to D0	Read/write
0x8C	D7 to D0	Read/write

The AD2S1210 continuously stores the minimum and maximum magnitude of the monitor signal in internal registers. The difference between the minimum and maximum is calculated to determine if a DOS mismatch has occurred. The initial values for the minimum and maximum internal registers must be defined by the user. When the fault register is cleared, the registers that store the maximum and minimum amplitudes of the monitor signal are reset to the values stored in the DOS reset maximum and minimum threshold registers. The resolution of the DOS reset maximum and minimum thresholds is seven bits each, that is, 38 mV. Note that the MSB, D7, should be set to 0.To ensure correct operation, it is recommended that the DOS reset minimum threshold register be set to at least 1 LSB less than the DOS overrange threshold, and the DOS reset maximum threshold register be set to at least 1 LSB greater than the LOS threshold register. The default value of the DOS reset minimum threshold register and the DOS reset maximum threshold register are 3.99 V and 2.28 V, respectively.

LOT HIGH THRESHOLD REGISTER

Table 17. 8-Bit Register

Address	Bit	Read/Write
0x8D	D7 to D0	Read/write

The LOT high threshold register determines the loss of position tracking threshold for the AD2S1210. The LOT high threshold is a 7-bit word. Note that the MSB, D7, should be set to 0. The range of the LOT high threshold, the LSB size, and the default value of the LOT high threshold on power-up are dependent on the resolution setting of the AD2S1210, and are outlined in Table 19.

LOT LOW THRESHOLD REGISTER

Table 18. 8-Bit Register

Address	Bit	Read/Write
0x8E	D7 to D0	Read/write

The LOT low threshold register determines the level of hysteresis on the loss of position tracking fault detection. Loss of tracking (LOT) occurs when the internal error signal of the AD2S1210 exceeds the LOT high threshold. LOT has hysteresis and is not cleared until the internal error signal is less than the value defined in the LOT low threshold register. The LOT low threshold is a 7-bit word. Note that the MSB, D7, should be set to 0. The range of the LOT high threshold, the LSB size, and the default value of the LOT high threshold on power-up are dependent on the resolution setting of the AD2S1210, and are outlined in Table 19.

Table 19. LOT High/Low Threshold

Resolution (Bits)	Range (Degrees)	LSB Size (Degrees)	LOT Low Default (Degrees)	LOT High Default (Degrees)
10	0 to 45	0.35	2.5	12.5
12	0 to 18	0.14	1.0	5.0
14	0 to 9	0.09	0.5	2.5
16	0 to 9	0.09	0.5	2.5

EXCITATION FREQUENCY REGISTER

Table 20. 8-Bit Register

Address	Bit	Read/Write
0x91	D7 to D0	Read/write

The excitation frequency register determines the frequency of the excitation outputs of the AD2S1210. A 7-bit frequency control word is written to the register to set the excitation frequency. Note that the MSB, D7, should be set to 0.

$$FCW = \frac{\left(Excitation\ Frequency \times 2^{15}\right)}{f_{CLKIN}} \quad (9)$$

where FCW is the frequency control word and f_{CLKIN} is the clock frequency of the AD2S1210. The specified range of the excitation frequency is from 2 kHz to 20 kHz and can be set in increments of 250 Hz. To ensure that the AD2S1210 is operated within the specified frequency range, the frequency control word should be a value between 0x4 and 0x50.

For example, if the user requires an excitation frequency of 5 kHz and has an 8.192 MHz clock frequency, the code that needs to be programmed is given by

$$FCW = \frac{\left(5\ \text{kHz} \times 2^{15}\right)}{8.192\ \text{MHz}} = 14\ \text{(hexadecimal)}$$

The default excitation frequency of the AD2S1210 on power-up is 10 kHz.

CONTROL REGISTER

Table 21. 8-Bit Register

Address	Bit	Read/Write
0x92	D7 to D0	Read/write

The control register is an 8-bit register that sets the AD2S1210 control modes. The default value of the control register on power-up is 0x7E.

Table 22. Control Register Bit Descriptions

Bit	Description
D7	Address/data bit
D6	Reserved; set to 1
D5	Phase lock range 0 = 360°, 1 = ±44°
D4	0 = disable hysteresis, 1 = enable hysteresis
D3	Set Encoder Resolution EnRES1
D2	Set Encoder Resolution EnRES0
D1	Set Resolution RES1
D0	Set Resolution RES0

Address/Data Bit

The MSB of each 8-bit word written to the AD2S1210 indicates whether the 8-bit word is a register address or data. The MSB (D7) of each register address defined on the AD2S1210 is high. The MSB of each data word written to the AD2S1210 is low.

Note that when a data word is written to the AD2S1210, the MSB is internally reconfigured as a parity bit. When reading data from any of the read/write registers (see Table 10), the parity of Bit D6 to Bit D0 is recalculated and compared to the previously stored parity bit. The MSB of the 8-bit output is used to indicate whether a configuration error has occurred. If the MSB is returned high, this indicates that the data read back from the device does not match the configuration data written to the device in the previous write cycle.

Phase Lock Range

The phase lock range allows the AD2S1210 to compensate for phase errors between the excitation frequency and the sine/cosine inputs. The recommended mode of operation is to use the default phase lock range of ±44°. If additional phase lock range is required, a range of 360° can be set. However, in this mode of operation, the AD2S1210 should be reset following a loss of signal error. Failure to do so may result in a 180° error in the angular output data.

Hysteresis

The AD2S1210 includes a hysteresis function, ±1 LSB, between the output of the position integrator and the input to the position register. When operating in a noisy environment, this can be used to prevent flicker on the LSB. On the AD2S1210, the maximum tracking rate is defined by the bandwidth. Each resolution setting is internally configured with a different bandwidth, as outlined in Table 1. The maximum tracking rate and the bandwidth are inversely proportional to the resolution, that is, the maximum tracking rate increases as the resolution is decreased. The option of disabling the hysteresis allows the user to oversample the position output and to achieve a higher resolution output within the specified bandwidths through external averaging.

The hysteresis function can be enabled or disabled through setting Bit D4 in the control register. Hysteresis is enabled by default on power-up.

Set Encoder Resolution

The resolution of the encoder outputs of the AD2S1210 can be set to the same resolution as the digital output or it can also be set to a lower resolution. For example, when the resolution of the AD2S1210 position outputs is set to 16 bits, the resolution of the encoder outputs may be set to 14, 12, or 10 bits. This allows the user to take advantage of the lower bandwidth and improved performance of the 16-bit resolution setting without requiring external divide down of the A-quad-B encoder outputs. The default resolution of the encoder outputs on power-up is 16 bits. Refer to the Incremental Encoder Outputs section.

Table 23. Encoder Resolution Settings

EnRES0	EnRES1	Resolution (Bits)
0	0	10
0	1	12
1	0	14
1	1	16

Set Resolution

In normal mode, the resolution of the digital output is selected using the RES0 and RES1 input pins (see Table 9). In configuration mode, the resolution is selected by setting the RES0 and RES1 bits in the control register. When switching between normal mode and configuration mode, it is the responsibility of the user to ensure that the resolution set in the control register matches the resolution set by the RES0 and RES1 input pins. The default resolution of the digital output on power-up is 12 bits.

SOFTWARE RESET REGISTER

Table 24. 8-Bit Register

Address	Bit	Read/Write
0xF0	D7 to D0	Write only

Addressing the software reset register, that is writing the 8-bit address, 0xF0, of the software reset register to the AD2S1210 while in configuration mode, allows the user to initiate a software reset of the AD2S1210. The software reset reinitializes the excitation frequency outputs and the internal Type II tracking loop. The data stored in the configuration registers is not overwritten by a software reset. However, it should be noted that the data in the fault register is reset. In an application that uses two or more resolver-to-digital converters, which are both driven from the same clock source, the software reset can be used to synchronize the phase of the excitation frequencies across the converters.

FAULT REGISTER

Table 25. 8-Bit Register

Address	Bit	Read/Write
0xFF	D7 to D0	Read only

The AD2S1210 has the ability to detect eight separate fault conditions. When a fault occurs, the DOS and/or the LOT output pins are taken low. By reading the fault register, the user can determine the cause of the triggering of the fault detection output pins. Note that the fault register bits are active high, that is, the fault bits are taken high to indicate that a fault has occurred.

Table 26. Fault Register Bit Descriptions

Bit	Description
D7	Sine/cosine inputs clipped
D6	Sine/cosine inputs below LOS threshold
D5	Sine/cosine inputs exceed DOS overrange threshold
D4	Sine/cosine inputs exceed DOS mismatch threshold
D3	Tracking error exceeds LOT threshold
D2	Velocity exceeds maximum tracking rate
D1	Phase error exceeds phase lock range
D0	Configuration parity error

DIGITAL INTERFACE

The angular position and angular velocity are represented by binary data and can be extracted either via a 16-bit parallel interface or via a 4-wire serial interface that operates at clock rates of up to 25 MHz. The AD2S1210 programmable functions are controlled using a set of on-chip registers. Data is written to these registers using either the serial or the parallel interface.

$\overline{\text{SOE}}$ INPUT

The serial output enable pin, $\overline{\text{SOE}}$, is held high to enable the parallel interface. The $\overline{\text{SOE}}$ pin is held low to enable the serial interface, which places Pin DB0 to Pin DB12 in the high impedance state. Pin DB13 is the serial clock input (SCLK), Pin DB14 is the serial data input (SDI), Pin DB15 is the serial data output (SDO), and $\overline{\text{WR}}/\overline{\text{FSYNC}}$ is the frame synchronization input.

$\overline{\text{SAMPLE}}$ INPUT

The AD2S1210 operates on a Type II tracking closed-loop principle. The loop continually tracks the position and velocity of the resolver without the need for external conversion and wait states. The position and velocity registers are external to the loop and are updated with a high-to-low transition of the $\overline{\text{SAMPLE}}$ signal. This pin must be held low for at least t_{16} ns to guarantee correct latching of the data.

DATA FORMAT

The digital angle data represents the absolute position of the resolver shaft as a 10-bit to 16-bit unsigned binary word. The digital velocity data is a 10-bit to 16-bit twos complement word, which represents the velocity of the resolver shaft rotating in either a clockwise or a counterclockwise direction.

PARALLEL INTERFACE

The parallel interface is selected holding the $\overline{\text{SOE}}$ pin high. The chip select pin, $\overline{\text{CS}}$, must be held low to enable the interface.

Writing to the AD2S1210

The on-chip registers of the AD2S1210 are written to, in parallel mode, using an 8-bit parallel interface, D7 to D0, and the $\overline{\text{WR}}/\overline{\text{FSYNC}}$ pin. The MSB of each 8-bit word written to the AD2S1210 indicates whether the 8-bit word is a register address or data. The MSB (D7) of each register address defined on the AD2S1210 is high (see the Register Map section). The MSB of each data word written to the AD2S1210 is low. To write to one of the registers, the user must first place the AD2S1210 into configuration mode using the A0 and A1 inputs. Then the 8-bit address should be written to the AD2S1210 using Pin DB7 to Pin DB0, and latched using the rising edge of the $\overline{\text{WR}}/\overline{\text{FSYNC}}$ input. The data can then be presented on Pin DB7 to Pin DB0 and again latched into the part using the $\overline{\text{WR}}/\overline{\text{FSYNC}}$ input. Figure 28 shows the timing specifications to follow when writng to the configuration registers. Note that the $\overline{\text{RD}}$ input should be held high when writing to the AD2S1210.

Reading from the AD2S1210

The following data can be read back from the AD2S1210:

- Angular position
- Angular velocity
- Fault register data
- Status of on-chip registers

The angular position and angular velocity data can be read back in either normal mode or configuration mode. To read the status of the fault register or the remaining on-chip registers, the part must be put into configuration mode.

Reading from the AD2S1210 in Configuration Mode

To read back data stored in one of the on-chip registers, including the fault register, the user must first place the AD2S1210 into configuration mode using the A0 and A1 inputs. The 8-bit address of the register to be read should then be written to the part, as described in the Writing to the AD2S1210 section. This transfers the relevant data to the output register. The data can then be read using the $\overline{\text{RD}}$ input as described previously. When reading back data from any of the read/write registers (see Table 10), the 8-bit word consists of the seven bits of data in the relevant register, D6 to D0, and an error bit, D7. If the error bit is returned high, this indicates that the data read back from the device does not match the configuration data written to the device in the previous write cycle.

If the user wants to read back the angular position or velocity data while in configuration mode, a falling edge of the $\overline{\text{SAMPLE}}$ input is required to update the information in the position and velocity registers. The data in these registers can then be read back by addressing the required register and reading back the data as described previously. Figure 29 shows the timing specifications to follow when reading from the configuration registers.

Reading from the AD2S1210 in Normal Mode

To read back position or velocity data from the AD2S1210, the information stored in the position and velocity registers should first be updated using the $\overline{\text{SAMPLE}}$ input. A high-to-low transition on the $\overline{\text{SAMPLE}}$ input transfers the data from the position and velocity integrators to the position and velocity registers. The fault register is also updated on the high-to-low transition of the $\overline{\text{SAMPLE}}$ input. The status of the A0 and A1 inputs determines whether the position or velocity data is transferred to the output register. The $\overline{\text{CS}}$ pin must be held low to transfer the selected data to the output register. Finally, the $\overline{\text{RD}}$ input is used to read the data from the output register and to enable the output buffer. The output buffer is enabled when $\overline{\text{CS}}$ and $\overline{\text{RD}}$ are held low. The data pins return to a high impedance state when $\overline{\text{RD}}$ returns to a high state. If the user is reading data continuously, $\overline{\text{RD}}$ can be reapplied a minimum of t_{20} ns after it was released.

The timing requirements for the read cycle are shown in Figure 30. Note that the $\overline{\text{WR}}/\overline{\text{FSYNC}}$ input should be high when $\overline{\text{RD}}$ is low.

Clearing the Fault Register

The LOT pin and/or the DOS pin of the AD2S1210 are taken low to indicate that a fault has been detected. The AD2S1210 is capable of detecting eight separate fault conditions. To determine which condition triggered the fault indication, the user is required to enter configuration mode and read the fault register. To reset the fault indicators, an additional $\overline{\text{SAMPLE}}$ pulse is required. This ensures that any faults that may occur between the initial sampling and subsequent reading of the fault register are captured. Therefore, to read and clear the fault register, the following sequence of events is required:

1. A high-to-low transition of the $\overline{\text{SAMPLE}}$ input.
2. The $\overline{\text{SAMPLE}}$ input should be held low for t_{16} ns and then can be returned high.
3. The AD2S1210 should be put into configuration mode, that is, A0 and A1 are both set to logic high.
4. The fault register should be read as described in the Reading from the AD2S1210 in Configuration Mode section.
5. A second high-to-low transition of the $\overline{\text{SAMPLE}}$ input clears the fault indications on the DOS and/or LOT pins.
6. Note that in the event of a persistent fault, the fault indicators are reasserted within the specified fault time latency.

Figure 31 shows the timing specifications to follow when clearing the fault register.

Note that the last valid register address written to the AD2S1210 prior to exiting configuration mode is again valid when reentering configuration mode. It is therefore recommended that when initial configuration of the AD2S1210 is complete, the fault address should be written to the AD2S1210 before leaving configuration mode. This simplifies the reading and clearing of the fault register in normal operation because it is now possible to access the position, velocity, and fault information by toggling the A0 and A1 pins without requiring additional register addressing.

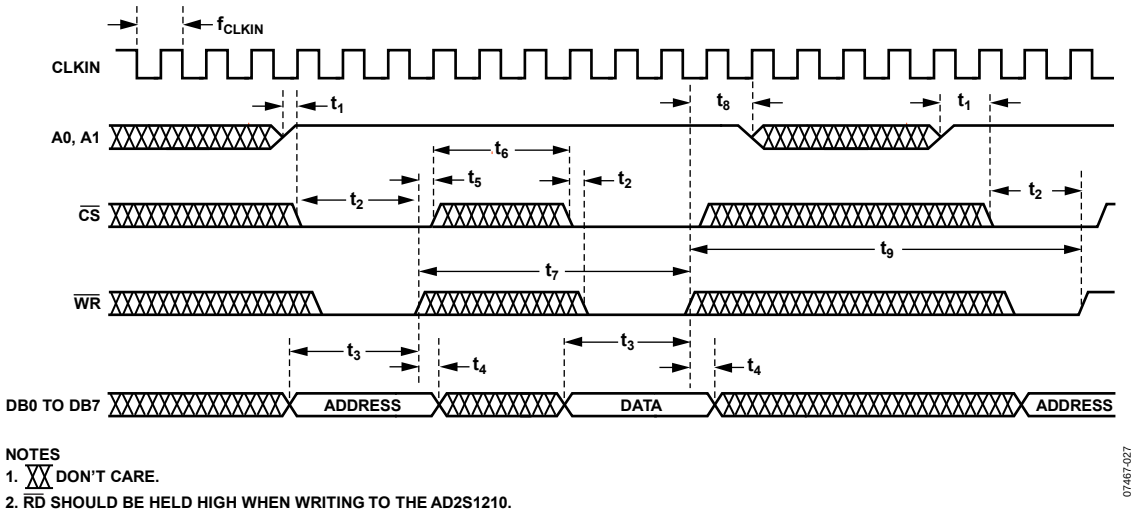

Figure 28. Parallel Port Write Timing—Configuration Mode

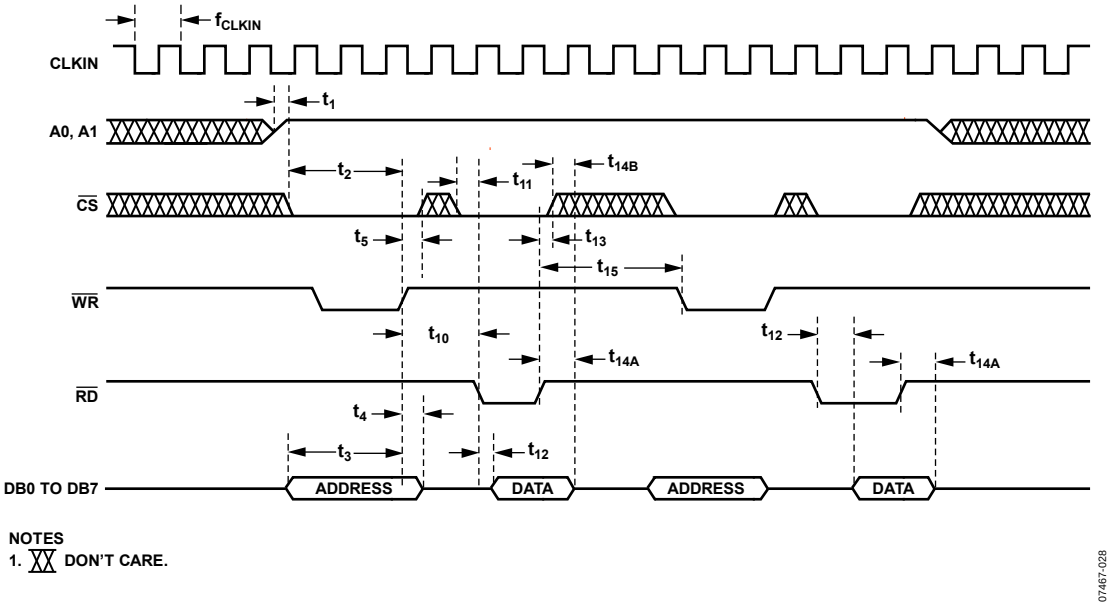

Figure 29. Parallel Port Read Timing—Configuration Mode

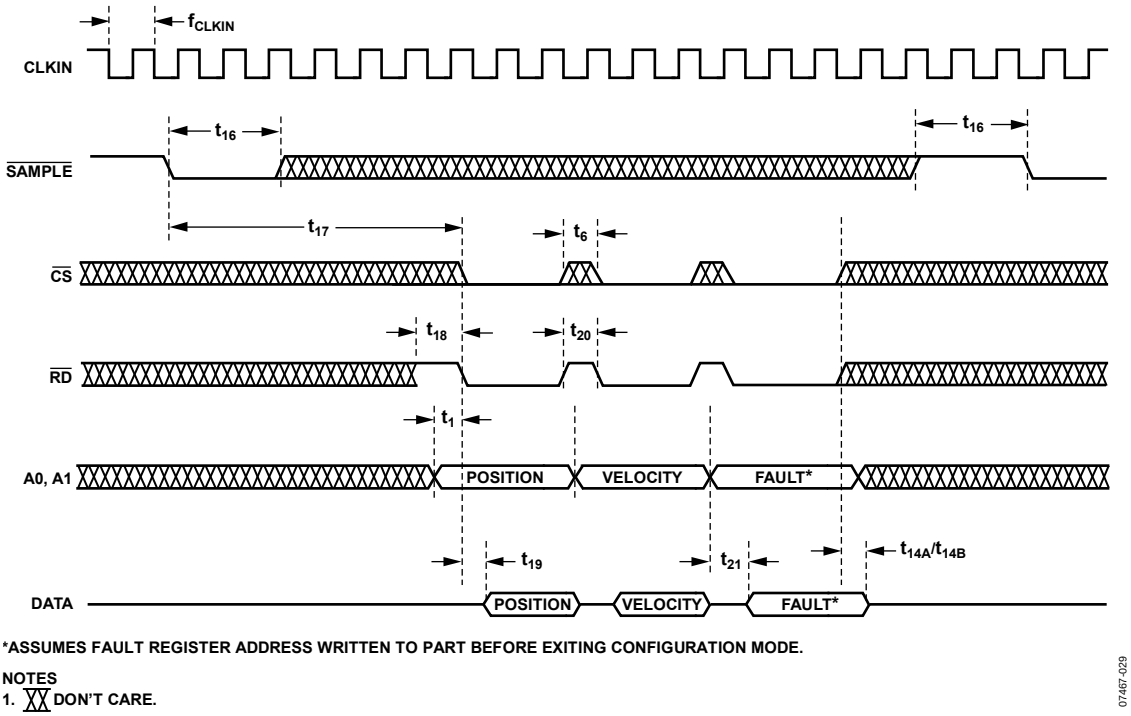

Figure 30. Parallel Port Read Timing

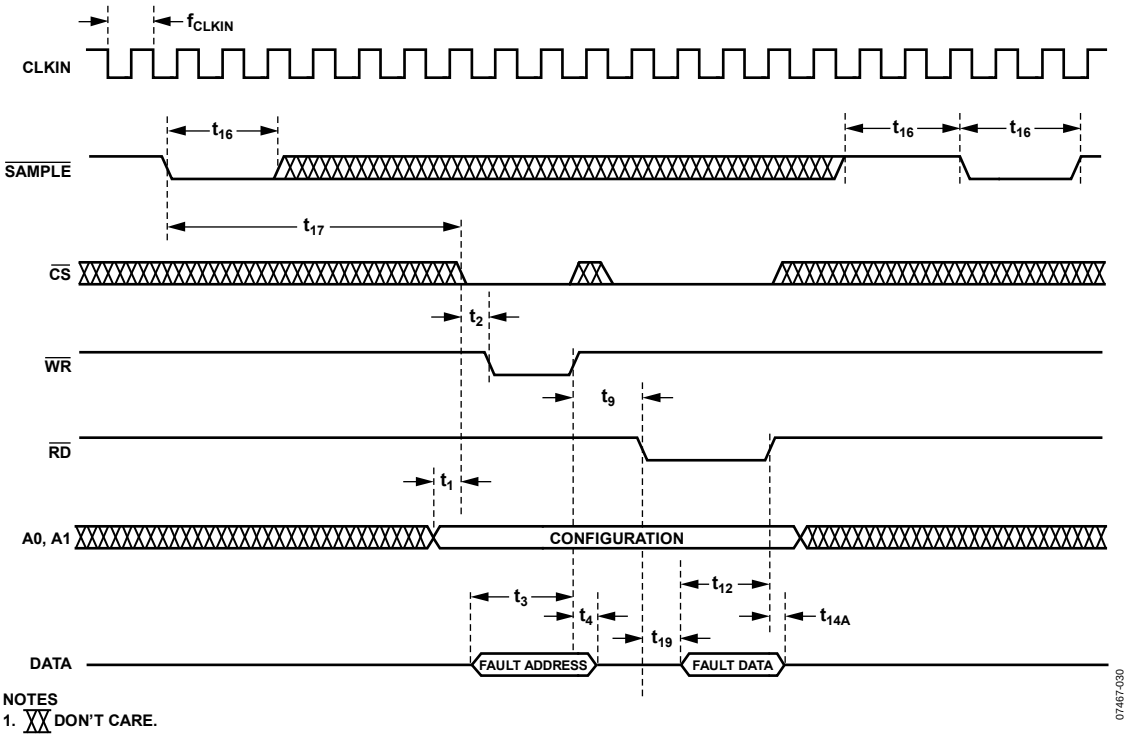

NOTES
1. DON'T CARE.

Figure 31. Parallel Port—Clear Fault Register

SERIAL INTERFACE

The serial interface is selected by holding the $\overline{SOE}$ pin low. The AD2S1210 serial interface consists of four signals: SDO, SDI, $\overline{WR}/\overline{FSYNC}$, and SCLK. The SDI is used for transferring data into the on-chip registers whereas the SDO is used for accessing data from the on-chip registers, including the position, velocity, and fault registers. SCLK is the serial clock input for the device, and all data transfers (either on SDI or SDO) take place with respect to this SCLK signal. $\overline{WR}/\overline{FSYNC}$ is used to frame the data. The falling edge of $\overline{WR}/\overline{FSYNC}$ takes the SDI and SDO lines out of a high impedance state. A rising edge on $\overline{WR}/\overline{FSYNC}$ returns the SDI and SDO to a high impedance state. The $\overline{CS}$ input is not required for the serial interface and should be held low.

SDO Output

In normal mode of operation, data is shifted out of the device as a 24-bit word under the control of the serial clock input, SCLK. The data is shifted out on the rising edge of SCLK. The timing diagram for this operation is shown in Figure 32.

SDI Input

The SDI input is used to address the on-chip registers and as a daisy-chain input in configuration mode. The data is shifted into the part on the falling edge of SCLK. The timing diagram for this operation is shown in Figure 32.

Writing to the AD2S1210

The on-chip registers of the AD2S1210 can be accessed using the serial interface. To write to one of the registers, the user must first place the AD2S1210 into configuration mode using the A0 and A1 inputs. The 8-bit address should be written to the AD2S1210 using the SDI pin and latched using the rising edge of the $\overline{WR}/\overline{FSYNC}$ input. The data can then be presented on the SDI pin and again latched into the part using the $\overline{WR}/\overline{FSYNC}$ input. The MSB of the 8-bit write indicates whether the 8-bit word is a register address, MSB set high, or the data to be written, MSB set low. Figure 33 shows the timing specifications to follow when writing to the configuration registers.

Reading from the AD2S1210 in Configuration Mode

To read back data stored in one of the on-chip registers, including the fault register, the user must first place the AD2S1210 into configuration mode using the A0 and A1 inputs. The 8-bit address of the register to be read should then be written to the part, as described in the Writing to the AD2S1210 section. This transfers the relevant data to the output register.

In configuration mode, the output shift register is eight bits wide. Data is shifted out of the device as an 8-bit word under the control of the serial clock input, SCLK. The timing diagram for this operation is shown in Figure 34. When reading back data from any of the read/write registers (see Table 10), the 8-bit word consists of the seven bits of data in the relevant register, D6 to D0, and an error bit, D7. If the error bit is returned high, this indicates that the data read back from the device does not match the configuration data written to the device in the previous write cycle.

To read back the angular position or velocity data while in configuration mode, a falling edge of the $\overline{SAMPLE}$ input is required to update the information in the position and velocity registers.

Reading from the AD2S1210 in Normal Mode

To read back position or velocity data from the AD2S1210, the information stored in the position and velocity registers should first be updated using the $\overline{SAMPLE}$ input. A high-to-low transition on the $\overline{SAMPLE}$ input transfers the data from the position and velocity integrators to the position and velocity registers. The fault register is also updated on the high-to-low transition of the $\overline{SAMPLE}$ input. The status of the A0 and A1 inputs determines whether the position or velocity data is transferred to the output register.

In normal mode, the output shift register is 24 bits wide. The 24-bit word consists of 16 bits of angular data (position or velocity data) followed by the 8-bit fault register data. Data is read out MSB first (Bit 23) on the SDO pin. Bit 23 through Bit 8 correspond to the angular information. The angular position data format is unsigned binary, with all 0s corresponding to 0 degrees and all 1s corresponding to 360 degrees – l LSB. The angular velocity data format is twos complement binary, with the MSB representing the rotation direction. Bit 7 through Bit 0 correspond to the fault information. If the user does not require the fault information, the $\overline{WR}/\overline{FSYNC}$ can be pulled high after the16th SCLK rising edge.

Clearing the Fault Register

The LOT pin and/or the DOS pin of the AD2S1210 are taken low to indicate that a fault has been detected. The AD2S1210 is capable of detecting eight separate fault conditions. To determine which condition triggered the fault indication, the user is required to enter configuration mode and read the fault register. To reset the fault indicators, an additional $\overline{SAMPLE}$ pulse is required. This ensures that any faults that may occur between the initial sampling and subsequent reading of the fault register are captured. Therefore, to read and clear the fault register, the following sequence of events is required:

1. A high-to-low transition of the $\overline{SAMPLE}$ input.
2. Hold the $\overline{SAMPLE}$ input low for t_{16} ns and then it can be returned high.
3. Put the AD2S1210 into configuration mode, that is, A0 and A1 are both set to logic high.
4. Read the fault register as described in the Reading from the AD2S1210 in Configuration Mode section.
5. A second high-to-low transition of the $\overline{SAMPLE}$ input clears the fault indications on the DOS and/or LOT pins. Note that in the event of a persistent fault, the fault indicators are reasserted within the specified fault time latency.

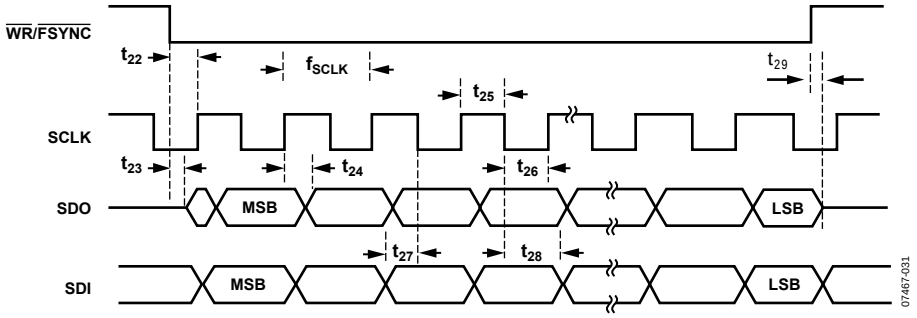

Figure 32. Serial Interface Timing Diagram

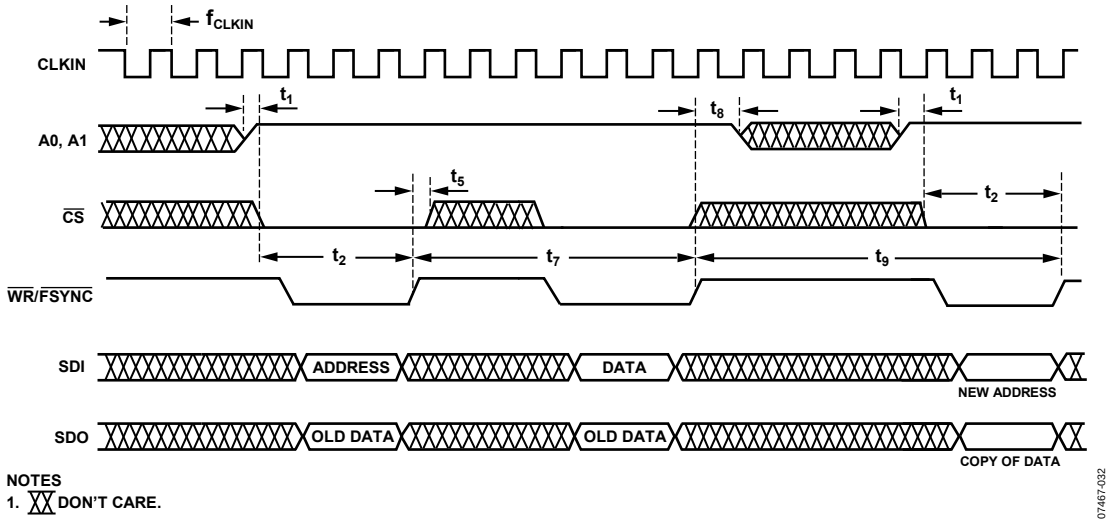

Figure 33. Serial Interface Write Timing—Configuration Mode

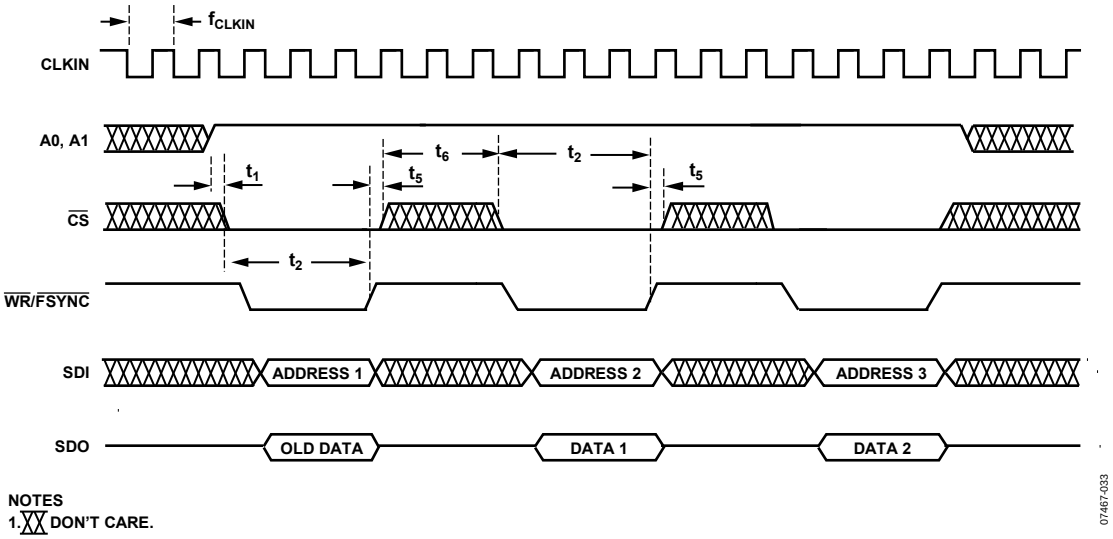

Figure 34. Serial Interface Read Timing—Configuration Mode

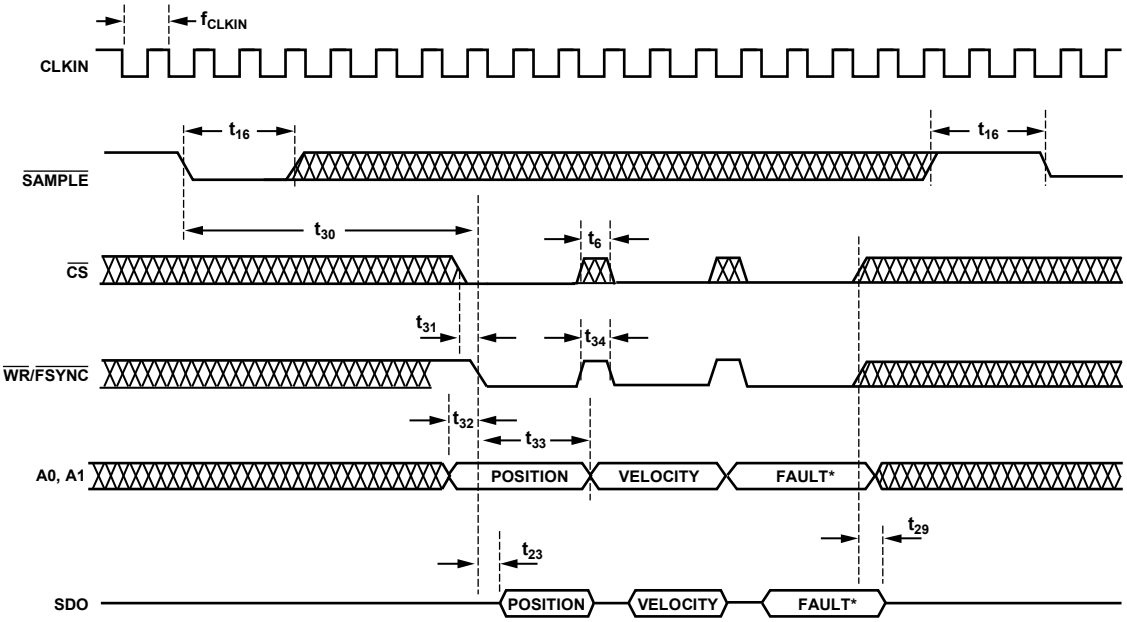

*ASSUMES FAULT REGISTER ADDRESS WRITTEN TO PART BEFORE EXITING CONFIGURATION MODE.

NOTES
1. DON'T CARE.

Figure 35. Serial Interface Read Timing

INCREMENTAL ENCODER OUTPUTS

The A, B, and NM incremental encoder emulation outputs are free running and are valid if the resolver format input signals applied to the converter are valid.

The AD2S1210 can be configured to emulate a 256-line, a 1024-line, a 4096-line, or a 16,384-line encoder. For example, if the AD2S1210 is configured for 12-bit resolution, one revolution produces 1024 A and B pulses. Pulse A leads Pulse B for increasing angular rotation (that is, clockwise direction).

The resolution of the encoder emulation outputs of the AD2S1210 is generally configured to match the resolution of the digital output. However, the encoder emulation outputs of the AD2S1210 can also be configured to have a lower resolution than the digital outputs. For example, if the AD2S1210 is configured for 16-bit resolution, then the encoder emulation outputs can also be configured for 14-bit, 12-bit, or 10-bit resolution. However, the resolution of the encoder emulation outputs cannot be higher than the resolution of the digital output. If the AD2S1210 is configured such that the resolution of the encoder emulation outputs is higher than the resolution of the digital outputs, the AD2S1210 internally overrides this configuration. In this event, the resolution of the encoder outputs is set to match the resolution of the digital outputs. The resolution of the encoder emulation outputs can be programmed by writing to Bit D3 and Bit D2 of the control register.

The north marker pulse is generated as the absolute angular position passes through zero. The north marker pulse width is set internally for 90° and is defined relative to the A cycle. Figure 36 details the relationship between A, B, and NM.

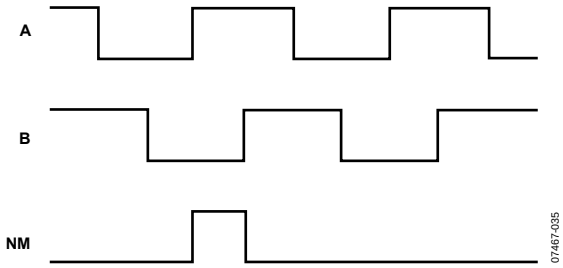

Figure 36. A, B, and NM Timing for Clockwise Rotation

The inclusion of A and B outputs allows the AD2S1210 with resolver solution to replace optical encoders directly without the need to change or upgrade existing application software.

SUPPLY SEQUENCING AND RESET

The AD2S1210 requires an external reset signal to hold the $\overline{\text{RESET}}$ input low until V_{DD} is within the specified operating range of 4.5 V to 5.5 V.

The $\overline{\text{RESET}}$ pin must be held low for a minimum of 10 µs after V_{DD} is within the specified range (shown as t_{RST} in Figure 37). Applying a $\overline{\text{RESET}}$ signal to the AD2S1210 initializes the output position to a value of 0x000 (degrees output through the parallel, serial, and encoder interfaces) and causes LOS to be indicated (LOT and DOS pins pulled low), as shown in Figure 37.

Failure to apply the correct power-up/reset sequence may result in an incorrect position indication.

After a rising edge on the $\overline{\text{RESET}}$ input, the device must be allowed at least t_{TRACK} ms (see Figure 37) for the internal circuitry to stabilize and the tracking loop to settle to the step change of the input position. For the duration of t_{TRACK} fault indications may occur on the LOT and DOS pins due to the step response caused by the $\overline{\text{RESET}}$. The duration of t_{TRACK} is dependent on the converter resolution as outlined in Table 27. After t_{TRACK}, the fault register should be read and cleared as outlined in the Clearing the Fault Register section. The time required to read and clear the fault register is indicated as t_{FAULT}, and is defined by the interface speed of the DSP/microprocessor used in the application. (Note that if position data is acquired via the encoder outputs, these can be monitored during t_{TRACK}.)

Table 27. t_{TRACK} vs. Resolution (f_{CLKIN} = 8.192 MHz)

Resolution (Bits)	t_{TRACK} (ms)
10	10
12	20
14	25
16	60

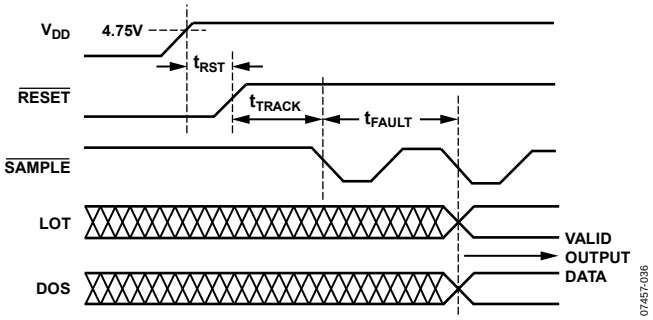

Figure 37. Power Supply Sequencing and Reset

CIRCUIT DYNAMICS

LOOP RESPONSE MODEL

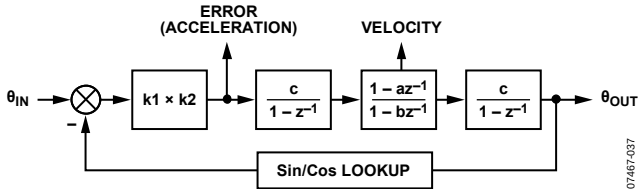

Figure 38. RDC System Response Block Diagram

The RDC is a mixed-signal device that uses two ADCs to digitize signals from the resolver and a Type II tracking loop to convert these to digital position and velocity words.

The first gain stage consists of the ADC gain on the sine/cosine inputs and the gain of the error signal into the first integrator. The first integrator generates a signal proportional to velocity. The compensation filter contains a pole and a zero that are used to provide phase margin and reduce high frequency noise gain. The second integrator is the same as the first and generates the position output from the velocity signal. The sin/cos lookup has unity gain. The values for the k1, k2, a, b, and c parameters are outlined in Table 28.

The following equations outline the transfer functions of the individual blocks as shown in Figure 38, which then combine to form the complete RDC system loop response.

Integrator1 and Integrator2 transfer function

$$I(z) = \frac{c}{1 - z^{-1}} \tag{10}$$

Compensation filter transfer function

$$C(z) = \frac{1 - az^{-1}}{1 - bz^{-1}} \tag{11}$$

RDC open-loop transfer function

$$G(z) = k1 \times k2 \times I(z)^2 \times C(z) \tag{12}$$

RDC closed-loop transfer function

$$H(z) = \frac{G(z)}{1 + G(z)} \tag{13}$$

The closed-loop magnitude and phase responses are that of a second-order low-pass filter (see Figure 11 and Figure 12).

To convert G(z) into the s-plane, an inverse bilinear transformation is performed by substituting the following equation for z:

$$z = \frac{\frac{2}{t} + s}{\frac{2}{t} - s} \tag{14}$$

where t is the sampling period (1/4.096 MHz ≈ 244 ns).

Substitution yields the open-loop transfer function, G(s).

$$G(s) = \frac{k1 \times k2(1-a)}{a-b} \times \frac{1 + st + \frac{s^2t^2}{4}}{s^2} \times \frac{1 + s \times \frac{t(1+a)}{2(1-a)}}{1 + s \times \frac{t(1+b)}{2(1-b)}} \tag{15}$$

This transformation produces the best matching at low frequencies ($f < f_{SAMPLE}$). At such frequencies (within the closed-loop bandwidth of the AD2S1210), the transfer function can be simplified to

$$G(s) \cong \frac{K_a}{s^2} \times \frac{1 + st_1}{1 + st_2} \tag{16}$$

where:

$$t_1 = \frac{t(1+a)}{2(1-a)}$$

$$t_2 = \frac{t(1+b)}{2(1-b)}$$

$$K_a = \frac{k1 \times k2(1-a)}{a-b}$$

Solving for each value gives t_1, t_2, and K_a as outlined in Table 29.

Table 28. RDC System Response Parameters

Parameter	Description	10-bit resolution	12-bit resolution	14-bit resolution	16-bit resolution
k1 (nominal)	ADC gain	1.8/2.5	1.8/2.5	1.8/2.5	1.8/2.5
k2	Error gain	$6 \times 10^6 \times 2\pi$	$18 \times 10^6 \times 2\pi$	$82 \times 10^6 \times 2\pi$	$66 \times 10^6 \times 2\pi$
a	Compensator zero coefficient	8187/8192	4095/4096	8191/8192	32,767/32,768
b	Compensator pole coefficient	509/512	4085/4096	16,359/16,384	32,757/32,768
c	Integrator gain	1/1,024,000	1/4,096,000	1/16,384,000	1/65,536,000

Table 29. Loop Transfer Function Parameters vs. Resolution (f_{CLKIN} = 8.192 MHz)

Resolution (Bits)	t_1 (ms)	t_2 (ms)	K_a (sec^{-2})
10	0.4	42	39.6×10^6
12	1	91	6.5×10^6
14	2	160	1.6×10^6
16	8	728	92.7×10^3

Note that the closed-loop response is described as

$$H(s) = \frac{G(s)}{1 + G(s)} \tag{17}$$

By converting the calculation to the s-domain, it is possible to quantify the open-loop dc gain (K_a). This value is useful to calculate the acceleration error of the loop (see the Sources of Error section).

The step response to a 10° input step is shown in Figure 10, Figure 11, Figure 12, and Figure 13. The step response to a 179° input step is shown in Figure 14, Figure 15, Figure 16, and Figure 17. In response to a step change in velocity, the AD2S1210 exhibits the same response characteristics as it does for a step change in position.

Figure 18 and Figure 19 in the Typical Performance Characteristics section show the magnitude and phase responses of the AD2S1210 for each resolution setting.

SOURCES OF ERROR

Acceleration

A tracking converter employing a Type II servo loop does not have a lag in velocity. There is, however, an error associated with acceleration. This error can be quantified using the acceleration constant (K_a) of the converter.

$$K_a = \frac{Input\ Acceleration}{Tracking\ Error} \tag{18}$$

Conversely,

$$Tracking\ Error = \frac{Input\ Acceleration}{K_a} \tag{19}$$

The units of the numerator and denominator must be consistent. The maximum acceleration of the AD2S1210 is defined by the maximum acceptable tracking error in the users application. For example, if the maximum acceptable tracking error is 5°, then the maximum acceleration is defined as the acceleration that creates an output position error of 5° (that is, when LOT is indicated).

An example of how to calculate the maximum acceleration in a 12-bit application with a maximum tracking error of 5° is

$$Maximum\ Acceleration = \frac{K_a(\sec^{-2}) \times 5°}{360(°/\text{rev})} \cong 90{,}300\ \text{rps}^2 \tag{20}$$

Figure 20 to Figure 23 in the Typical Performance Characteristics section show the tracking error vs. acceleration response of the AD2S1210 for each resolution setting.

OUTLINE DIMENSIONS

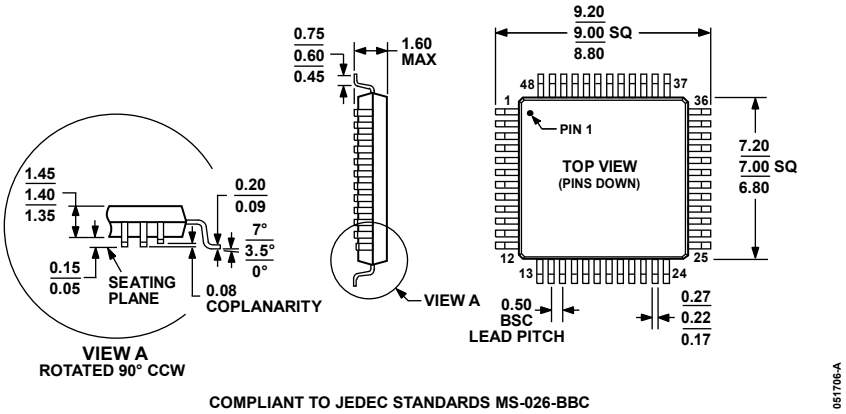

Figure 39. 48-Lead Low Profile Quad Flat Package [LQFP] (ST-48)
Dimensions shown in millimeters

ORDERING GUIDE

Model[1]	Temperature Range	Package Description	Package Option
AD2S1210ASTZ	−40°C to +85°C	48-Lead LQFP	ST-48
AD2S1210BSTZ	−40°C to +85°C	48-Lead LQFP	ST-48
AD2S1210CSTZ	−40°C to +125°C	48-Lead LQFP	ST-48
AD2S1210DSTZ	−40°C to +125°C	48-Lead LQFP	ST-48
AD2S1210WDSTZ[2]	−40°C to +125°C	48-Lead LQFP	ST-48
AD2S1210WDSTZRL7[2]	−40°C to +125°C	48-Lead LQFP	ST-48
EVAL-AD2S1210EDZ		Evaluation Board	

[1] Z = RoHS Compliant Part.
[2] Qualified for Automotive.

NOTES

NOTES

©2008–2010 Analog Devices, Inc. All rights reserved. Trademarks and registered trademarks are the property of their respective owners.
D07467-0-2/10(A)

Компания «ЭлектроПласт» предлагает заключение долгосрочных отношений при поставках импортных электронных компонентов на взаимовыгодных условиях!

Наши преимущества:

- Оперативные поставки широкого спектра электронных компонентов отечественного и импортного производства напрямую от производителей и с крупнейших мировых складов;
- Поставка более 17-ти миллионов наименований электронных компонентов;
- Поставка сложных, дефицитных, либо снятых с производства позиций;
- Оперативные сроки поставки под заказ (от 5 рабочих дней);
- Экспресс доставка в любую точку России;
- Техническая поддержка проекта, помощь в подборе аналогов, поставка прототипов;
- Система менеджмента качества сертифицирована по Международному стандарту ISO 9001;
- Лицензия ФСБ на осуществление работ с использованием сведений, составляющих государственную тайну;
- Поставка специализированных компонентов (Xilinx, Altera, Analog Devices, Intersil, Interpoint, Microsemi, Aeroflex, Peregrine, Syfer, Eurofarad, Texas Instrument, Miteq, Cobham, E2V, MA-COM, Hittite, Mini-Circuits,General Dynamics и др.);

Помимо этого, одним из направлений компании «ЭлектроПласт» является направление «Источники питания». Мы предлагаем Вам помощь Конструкторского отдела:

- Подбор оптимального решения, техническое обоснование при выборе компонента;
- Подбор аналогов;
- Консультации по применению компонента;
- Поставка образцов и прототипов;
- Техническая поддержка проекта;
- Защита от снятия компонента с производства.

Как с нами связаться

Телефон: 8 (812) 309 58 32 (многоканальный)
Факс: 8 (812) 320-02-42
Электронная почта: org@eplast1.ru
Адрес: 198099, г. Санкт-Петербург, ул. Калинина, дом 2, корпус 4, литера А.