XH3/XH4/XH2
Half-pitch Connectors Series

1.27-mm Contact Pitch
Greatly Contributing to High-density Mounting of Electronic Components and Miniaturization of Electronic Devices

- ●Stacking heights supported in the range 5 to 20 mm at 1-mm increments.
- ●Leaf contact structure ensures high resistance to twisting force and smooth connection and disconnection.
- ●XH2/XH3: Au/Pd-plated contacts with an engagement length of 3.1 mm ensure high contact reliability.
- ●Snap-on terminal for easy connection to the PCB.
- ●Housing with standoff construction for improved soldering quality and easier cleaning (except 1 and 2-mm increment models).
- ●XH2/XH3/XH4 DIP model: Approved by EN, IEC, UL, and CSA standards.
- ●Product lineup includes fine-fit models that are mounted to PCBs with ease with no soldering.

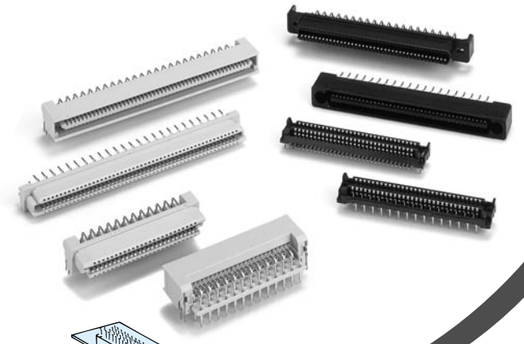

■Stacking Examples
●DIP Models

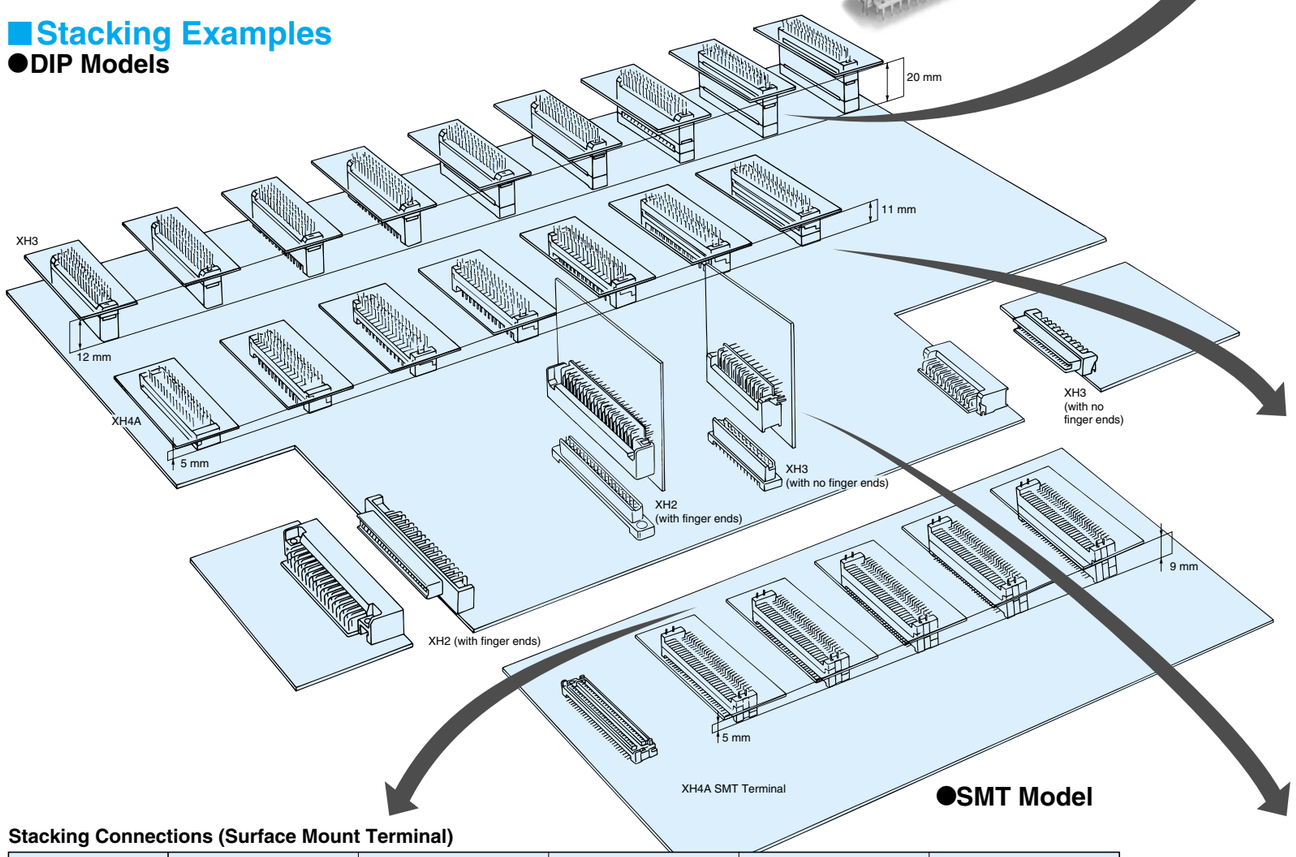

●SMT Model

Stacking Connections (Surface Mount Terminal)

Stacking Height	5 mm	6 mm	7 mm	8 mm	9 mm
Engagement	XH4A-□□35(-A) / 5 / XH4A-□□35(-A)	XH4A-□□35-1A / 6 / XH4A-□□35(-A)	XH4A-□□35-1A / 7 / XH4A-□□35-1A	XH4A-□□35-1A / 8 / XH4A-□□35-2A	XH4A-□□35-2A / 9 / XH4A-□□35-2A

■Engagement

Stacking Connections

Stacking Height	12 mm	13 mm	14 mm	15 mm	16 mm
Engagement	XH3B-□□41(-A) / 7 / 12 / 7 / XH3A-□□41(-A)	XH3B-□□41-1A / 7 / 13 / 7 / XH3A-□□41(-A)	XH3B-□□41(-A) / 7 / 14 / 7 / XH3A-□□41-2A	XH3B-□□41-1A / 7 / 15 / 7 / XH3A-□□41-2A	XH3B-□□41(-A) / 7 / 16 / 7 / XH3A-□□41-4A

Stacking Height	17 mm	18 mm	19 mm	20 mm
Engagement	XH3B-□□41-1A / 7 / 17 / 7 / XH3A-□□41-4A	XH3B-□□41-4A / 7 / 18 / 7 / XH3A-□□41-2A	XH3B-□□41-3A / 7 / 19 / 7 / XH3A-□□41-4A	XH3B-□□41-4A / 7 / 20 / 7 / XH3A-□□41-4A

Stacking Connections (Straight Terminal)

Stacking Height	5 mm	6 mm	7 mm	8 mm
Engagement	XH4A-□□31(-A) / 5.0 / XH4A-□□31(-A)	XH4A-□□31(-A) / 6.0 / XH4A-□□31-1A	XH4A-□□31-1A / 7.0 / XH4A-□□31-1A	XH4A-□□31-1A / 8.0 / XH4A-□□31-2A

Stacking Height	9 mm	10 mm	11 mm
Engagement	XH4A-□□31-2A / 9.0 / XH4A-□□31-2A	XH4A-□□31-2A / 10.0 / XH4A-□□31-3A	XH4A-□□31-3A / 11.0 / XH4A-□□31-3A

Vertical/Horizontal/Stacking

Vertical (Standard) (See note.)	Vertical (Reverse)	Horizontal
XH3A-□□42-A Plug; XH3B-□□41 Socket; 18.2; 11.6; 4; 7.5	XH3B-□□42-A Socket; XH3A-□□41 Plug; 18.2; 11.6; 4; 7.5	XH3A-□□42-A Plug; XH3B-□□2-A Socket; 11.2; 22.63; 24.4

XH3/XH4/XH2
Half-pitch Connectors Series

■Connection Examples
●Multi-tier Stacking of Fine-fit Models

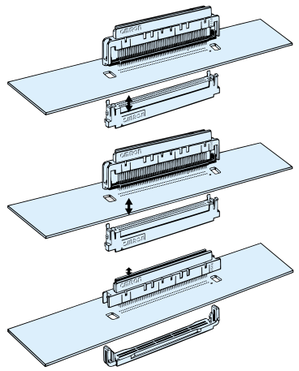

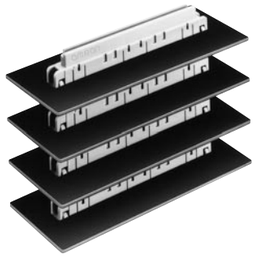

●Fine Fit
The term " fine fit " (generally known as " press fit ") refers to the technique where the connector terminal are pressed into the through holes of the PCB to connect the PCB and connector electrically and mechanically with the spring pressure of the terminal.
The connector is connected with no solder, eliminating the soldering stage usually required with connectors. Furthermore the PCB is free of thermal load or flux, thus contributing to cost reductions and improvements in contact reliability.

■Engagement
●Stacking Fine-fit Plain Models with Straight Terminal

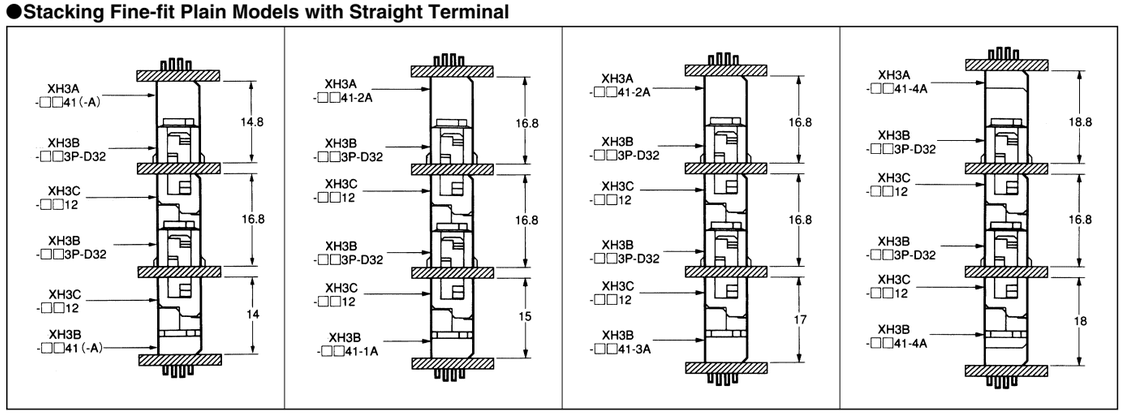

■Ordering Information
●XH3 Half-pitch Connectors (Fine-fit and Stacking Connection)

Shape	Socket (Backplane Model) XH3B-013P-D32	Housing (Backplane Model) XH3C-0112	Set model XH3B-013P-D32-C
Number of contacts	100	100	100

Shape	Connector with socket and short terminal XH3B-013P-D5F	Cover for short terminal XH3S-0111	Set model XH3B-013P-D5F-S
Number of contacts	100	100	100

●XH3 Half-pitch Connectors (Board-to-Board Connection)
Plugs

Shape	Plug with Straight terminal XH3A-□□41 XH3A-□□41-A	Plug with Straight terminal (models with stacking height adjustable in 2 or 4-mm increments) XH3A-□□41-2A XH3A-□□41-4A	Plug with Right angle terminal XH3A-□□42-A
Number of contacts	20,30,40,50,60,68,80,100,120	20,30,40,50,60,68,80,100,120	30,40,50,60,68,80,100

Sockets

Shape	Socket with Straight terminal XH3B-□□41 XH3B-□□41-A	Socket with Straight terminal (models with stacking height adjustable in 1, 3, or 4-mm increments) XH3B-□□41-1A XH3B-□□41-3A XH3B-□□41-4A	Socket with Right angle terminal (Provided with Lock Terminal) XH3B-□□42-A
Number of contacts	20,30,40,50,60,68,80,100,120	20,30,40,50,60,68,80,100,120	30,40,50,60,68,80,100

●XH4 Half-pitch Connectors (Low-profile Stacking Connection)

Shape	Half-pitch Connector with Straight terminal XH4A-□□31	Half-pitch Connector with Straight terminal (models other than standard models with stacking height adjustable in 1, 2, or 3-mm increments) XH4A-□□31-A XH4A-□□31-1A XH4A-□□31-2A XH4A-□□31-3A	Half-pitch Connector with SMT (models other than standard models with stacking height adjustable in 1 or 2-mm increments) XH4A-□□35-A XH4A-□□35-1A XH4A-□□35-2A
Number of contacts	40,50,60,80,100	40,50,60,80,100	40,50,60,80,100

Компания «ЭлектроПласт» предлагает заключение долгосрочных отношений при поставках импортных электронных компонентов на взаимовыгодных условиях!

Наши преимущества:

- Оперативные поставки широкого спектра электронных компонентов отечественного и импортного производства напрямую от производителей и с крупнейших мировых складов;
- Поставка более 17-ти миллионов наименований электронных компонентов;
- Поставка сложных, дефицитных, либо снятых с производства позиций;
- Оперативные сроки поставки под заказ (от 5 рабочих дней);
- Экспресс доставка в любую точку России;
- Техническая поддержка проекта, помощь в подборе аналогов, поставка прототипов;
- Система менеджмента качества сертифицирована по Международному стандарту ISO 9001;
- Лицензия ФСБ на осуществление работ с использованием сведений, составляющих государственную тайну;
- Поставка специализированных компонентов (Xilinx, Altera, Analog Devices, Intersil, Interpoint, Microsemi, Aeroflex, Peregrine, Syfer, Eurofarad, Texas Instrument, Miteq, Cobham, E2V, MA-COM, Hittite, Mini-Circuits,General Dynamics и др.);

Помимо этого, одним из направлений компании «ЭлектроПласт» является направление «Источники питания». Мы предлагаем Вам помощь Конструкторского отдела:

- Подбор оптимального решения, техническое обоснование при выборе компонента;
- Подбор аналогов;
- Консультации по применению компонента;
- Поставка образцов и прототипов;
- Техническая поддержка проекта;
- Защита от снятия компонента с производства.

Как с нами связаться

Телефон: 8 (812) 309 58 32 (многоканальный)
Факс: 8 (812) 320-02-42
Электронная почта: org@eplast1.ru
Адрес: 198099, г. Санкт-Петербург, ул. Калинина, дом 2, корпус 4, литера А.