THIS DRAWING IS UNPUBLISHED. RELEASED FOR PUBLICATION 20
© COPYRIGHT 20 BY TYCO ELECTRONICS CORPORATION ALL RIGHTS RESERVED.

LOC	DIST
GP	00

REVISIONS

P	LTR	DESCRIPTION	DATE	DWN	APVD
	A	RELEASED FOR PRODUCTION	02MAR2016	TX	SH

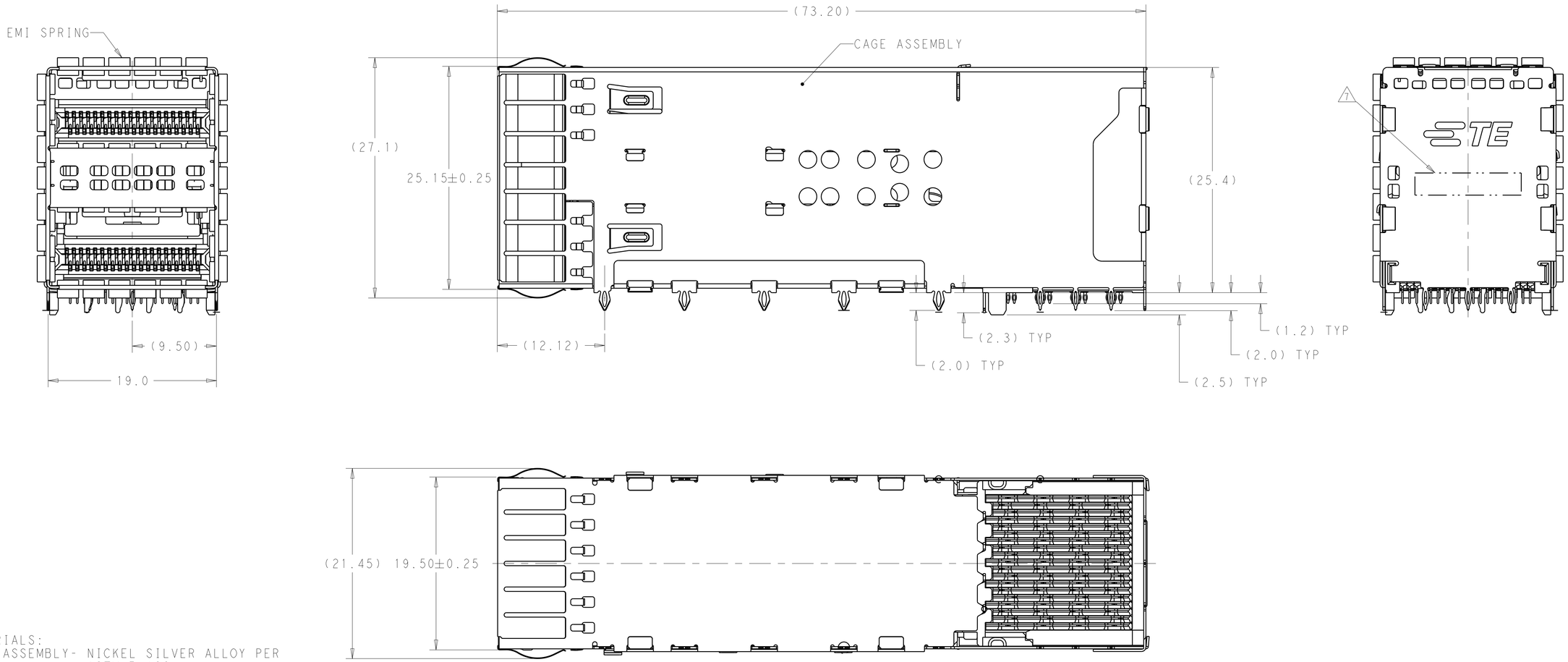

1. MATERIALS:
   CAGE ASSEMBLY- NICKEL SILVER ALLOY PER ASTM B 122.
   EMI SPRING- COPPER ALLOY, NICKEL PLATED.
   HOUSING- POLYESTER LCP WITH 94V-0.
   CHICKLET- POLYESTER LCP WITH 94V-0.
   CONTACT- COPPER ALLOY.
   LIGHTPIPE- POLYCARBONATE WITH 94V-0.

2. CONTACT FINISH: 0.76µm GOLD ON MATING END, 1.25µm MATT TIN ON SOLDER TAIL, ALL OVER 1.27µm NICKEL.

3. DATUM AND BASIC DIMENSION ESTABLISHED BY CUSTOMER.

4. MINIMUM PCB THICKNESS OF 1.57.

5. THE ENTIRE AREA OF THE CONNECTOR FOOTPRINT, INDICATED BY THE DASHED LINE, TO BE CONSIDERED THE KEEPOUT AREA FOR COMPONENTS.

6. CROSS-HATCHED AREAS REPRESENT ZONES ON THE PCB THAT COME IN CONTACT WITH OR BE IN CLOSE PROXIMITY TO THE PLASTIC HOUSING OR THE CONNECTOR CAGE. INDICATED AREAS TO BE CONSIDERED TRACE FREE.

7. PART NUMBER AND DATE CODE MAKED IN APPROXIMATE AREA SHOWN.

8. CONTACT FINISH: 0.08µm MINIMUM GOLD OVER 0.68µm PALLADIUM-NICKEL ON MATING END, 1.25µm MATT TIN ON SOLDER TAIL, ALL OVER 1.27µm NICKEL.

9. HATCHED AREA IS PLACEMENT ZONE FOR LED. LED SHOULD BE CENTERED WITHIN ZONE. RECOMMEND 0805 PACKAGE.

CONTACT FINISH	DESCRIPTION	PART NUMBER
2	ROUND INDICATOR, 4LP	1-2227669-1
2	ALL INDICATOR DOWN, 4LP	1-2227669-0
2	LEFT INDICATOR DOWN, 4LP	2227669-9
2	LEFT INDICATOR UP, 4LP	2227669-8
2	ALL INDICATOR UP, 4LP	2227669-7
8	LEFT INDICATOR DOWN	2227669-6
8	LEFT INDICATOR UP	2227669-5
8	NO LIGHT PIPE	2227669-4
2	LEFT INDICATOR DOWN	2227669-3
2	LEFT INDICATOR UP	2227669-2
2	NO LIGHTPIPE	2227669-1

THIS DRAWING IS A CONTROLLED DOCUMENT.

DIMENSIONS: mm

TOLERANCES UNLESS OTHERWISE SPECIFIED:
0 PLC ±-
1 PLC ±0.25
2 PLC ±0.15
3 PLC ±-
4 PLC ±-
ANGLES ±-

MATERIAL - SEE NOTE 1
FINISH - -

DWN M.SHIRK 16JAN2013
CHK D.SZCZESNY 16JAN2013
APVD -
PRODUCT SPEC 108-60102
APPLICATION SPEC 114-60015
WEIGHT -

TE Connectivity

NAME CAGE AND CONNECTOR ASSEMBLY, WITH EMI SPRING FINGERS, THRU BEZEL, 2X1, ZOSFP+ STACKED

SIZE A1 | CAGE CODE 00779 | DRAWING NO C-2227669 | RESTRICTED TO -

CUSTOMER DRAWING | SCALE 4:1 | SHEET 1 OF 5 | REV A

THIS DRAWING IS UNPUBLISHED. RELEASED FOR PUBLICATION 20
© COPYRIGHT 20 BY TYCO ELECTRONICS CORPORATION ALL RIGHTS RESERVED.

LOC	DIST

REVISIONS

P	LTR	DESCRIPTION	DATE	DWN	APVD
	-	SEE SHEET 1	-	-	-

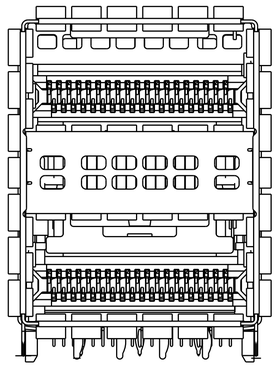

2227669-1 / 2227669-4
NO LIGHTPIPE IN ASSEMBLY

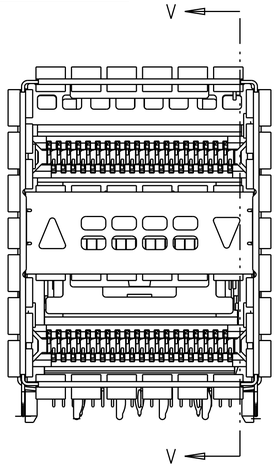

2227669-2 / 2227669-5
LEFT INDICATOR UP

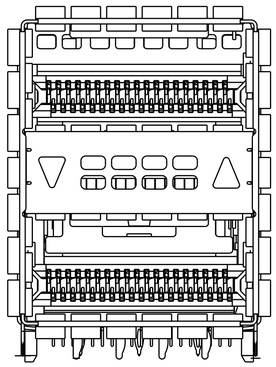

2227669-3 / 2227669-6
LEFT INDICATOR DOWN

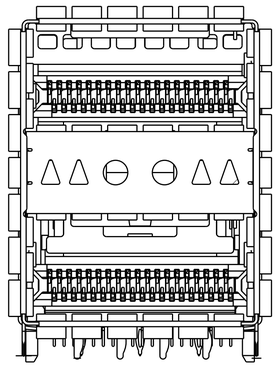

2227669-7
ALL INDICATOR UP, 4LP

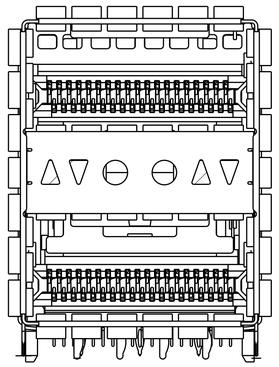

2227669-8
LEFT INDICATOR UP, 4LP

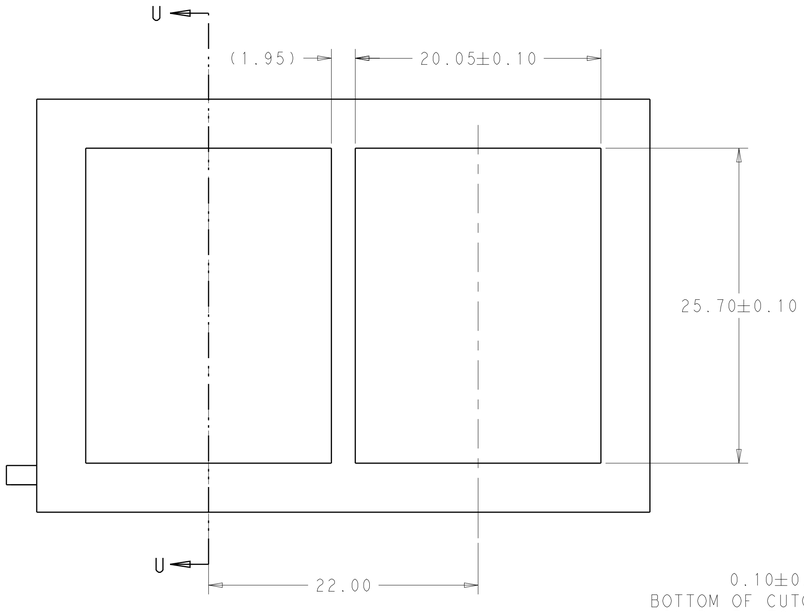

RECOMMENDED PANEL CUTOUT
AND PC BOARD, PANEL POSITION

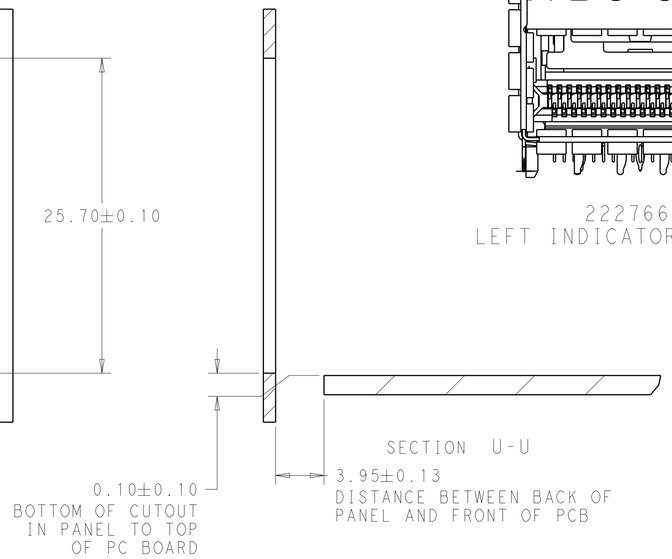

SECTION U-U

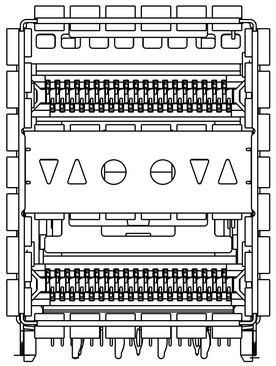

2227669-9
LEFT INDICATOR DOWN, 4LP

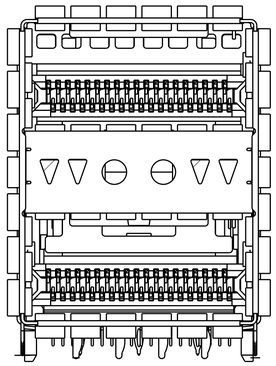

1-2227669-0
ALL INDICATOR DOWN, 4LP

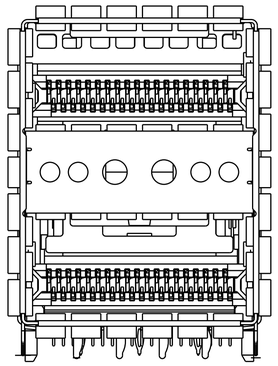

1-2227669-1
ROUND SHAPE INDICATORS, 4LP

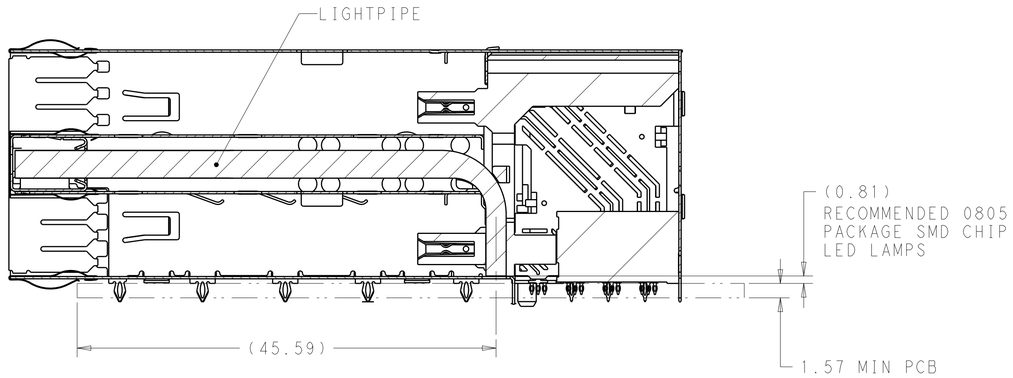

SECTION V-V
SCALE 3:1

THIS DRAWING IS A CONTROLLED DOCUMENT.	DWN M SHIRK 16JAN2013	TE Connectivity	
DIMENSIONS: mm	CHK D SZCZESNY 16JAN2013	NAME CAGE AND CONNECTOR ASSEMBLY, WITH EMI SPRING FINGERS, THRU BEZEL, 2X1, ZQSFP+ STACKED	
TOLERANCES UNLESS OTHERWISE SPECIFIED: 0 PLC ±- 1 PLC ±0.25 2 PLC ±0.15 3 PLC ±- 4 PLC ±- ANGLES ±-	APVD -		
	PRODUCT SPEC 108-60102		
	APPLICATION SPEC 114-60015		
MATERIAL - SEE NOTE 1	WEIGHT -	SIZE A1 / CAGE CODE 00779 / DRAWING NO C-2227669	RESTRICTED TO -
FINISH - -	CUSTOMER DRAWING	SCALE 4:1 / SHEET 1 OF 5	REV A

4805 (3/11)

THIS DRAWING IS UNPUBLISHED. RELEASED FOR PUBLICATION 20
© COPYRIGHT 20 BY TYCO ELECTRONICS CORPORATION ALL RIGHTS RESERVED.

LOC	DIST

REVISIONS

P	LTR	DESCRIPTION	DATE	DWN	APVD
	-	SEE SHEET 1	-	-	-

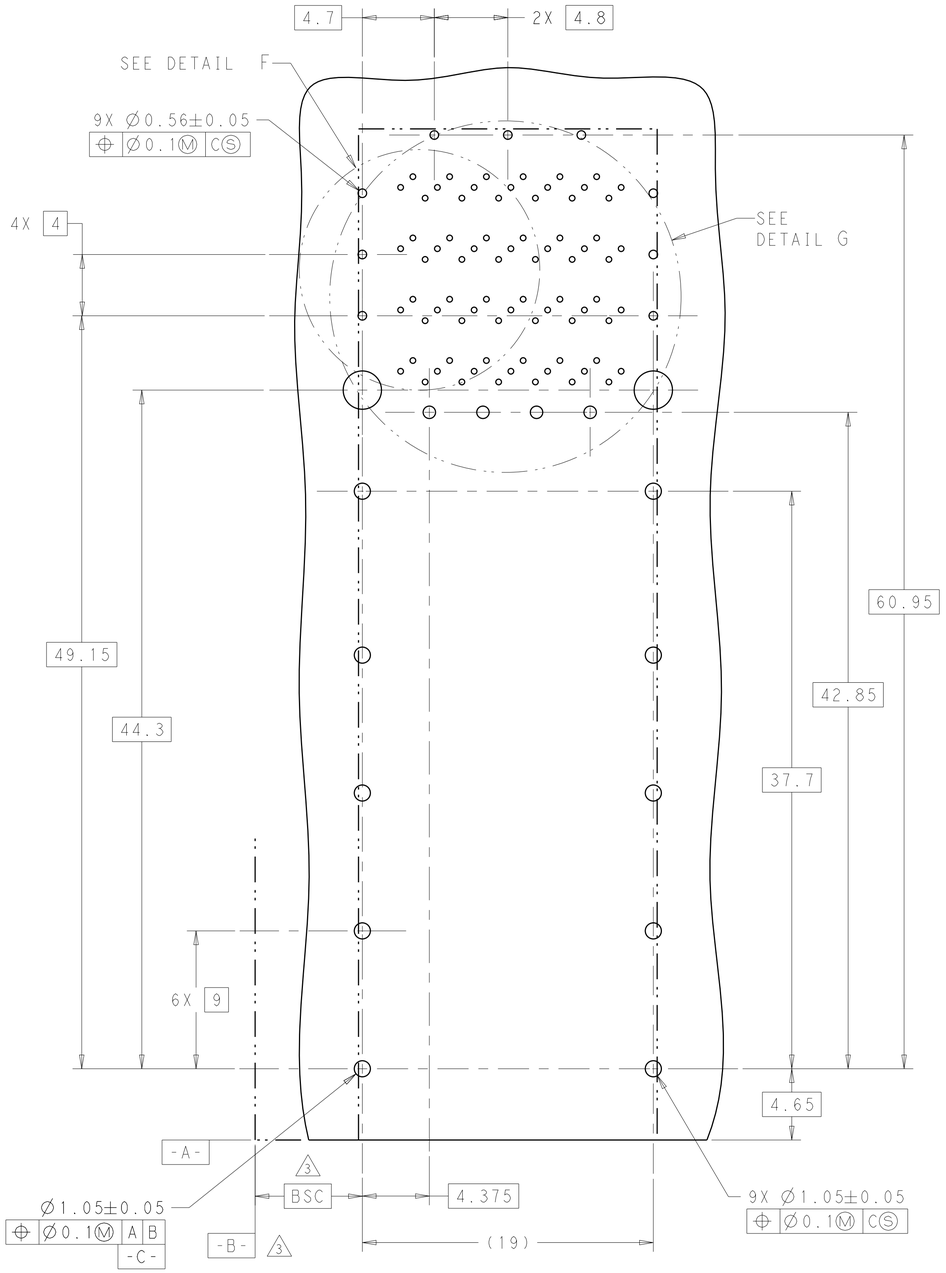

RECOMMENDED PC BOARD LAYOUT
COMPONENT SIDE OF BOARD
SCALE 5:1
(PCB TOLERANCE: ±0.05)

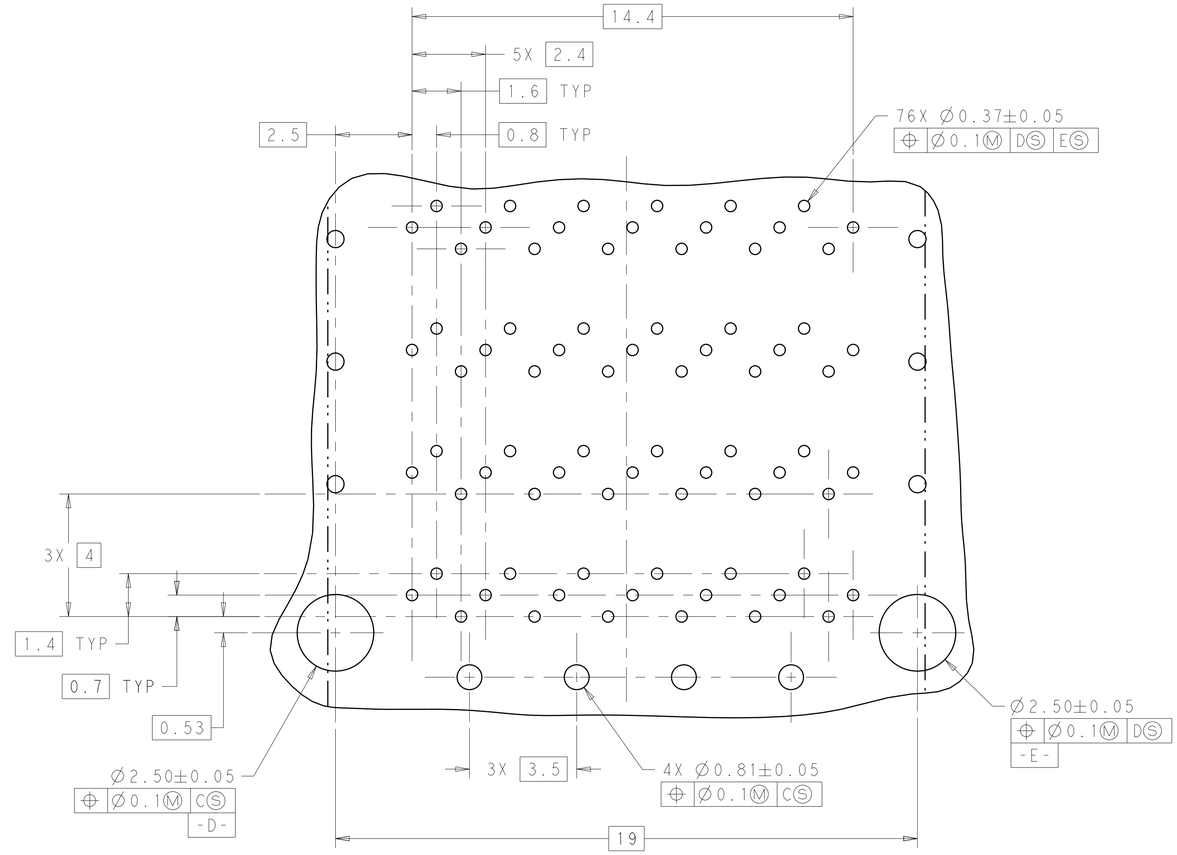

DETAIL G
SCALE 10:1

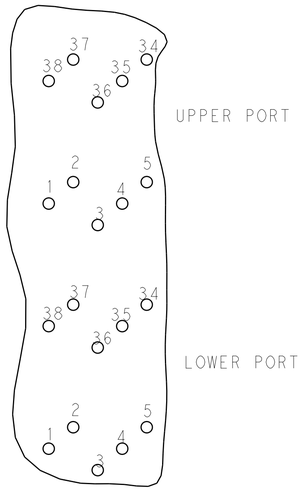

DETAIL F
SCALE 10:1
PIN ASSIGNMENTS

THIS DRAWING IS A CONTROLLED DOCUMENT.

DIMENSIONS: mm

TOLERANCES UNLESS OTHERWISE SPECIFIED:
0 PLC ±-
1 PLC ±0.25
2 PLC ±0.15
3 PLC ±-
4 PLC ±-
ANGLES ±-

MATERIAL - SEE NOTE 1
FINISH - -

DWN M.SHIRK 16JAN2013
CHK D.SZCZESNY 16JAN2013
APVD -
PRODUCT SPEC 108-60102
APPLICATION SPEC 114-60015
WEIGHT -

TE Connectivity

NAME CAGE AND CONNECTOR ASSEMBLY, WITH EMI SPRING FINGERS, THRU BEZEL, 2X1, ZQSFP+ STACKED

SIZE A1 | CAGE CODE 00779 | DRAWING NO C-2227669 | RESTRICTED TO -

CUSTOMER DRAWING | SCALE 4:1 | SHEET 1 OF 5 | REV A

4805 (3/11)

THIS DRAWING IS UNPUBLISHED. RELEASED FOR PUBLICATION 20
© COPYRIGHT 20 BY TYCO ELECTRONICS CORPORATION ALL RIGHTS RESERVED.

LOC	DIST	REVISIONS				
		P	LTR	DESCRIPTION	DATE	DWN	APVD
			-	SEE SHEET 1	-	-	-

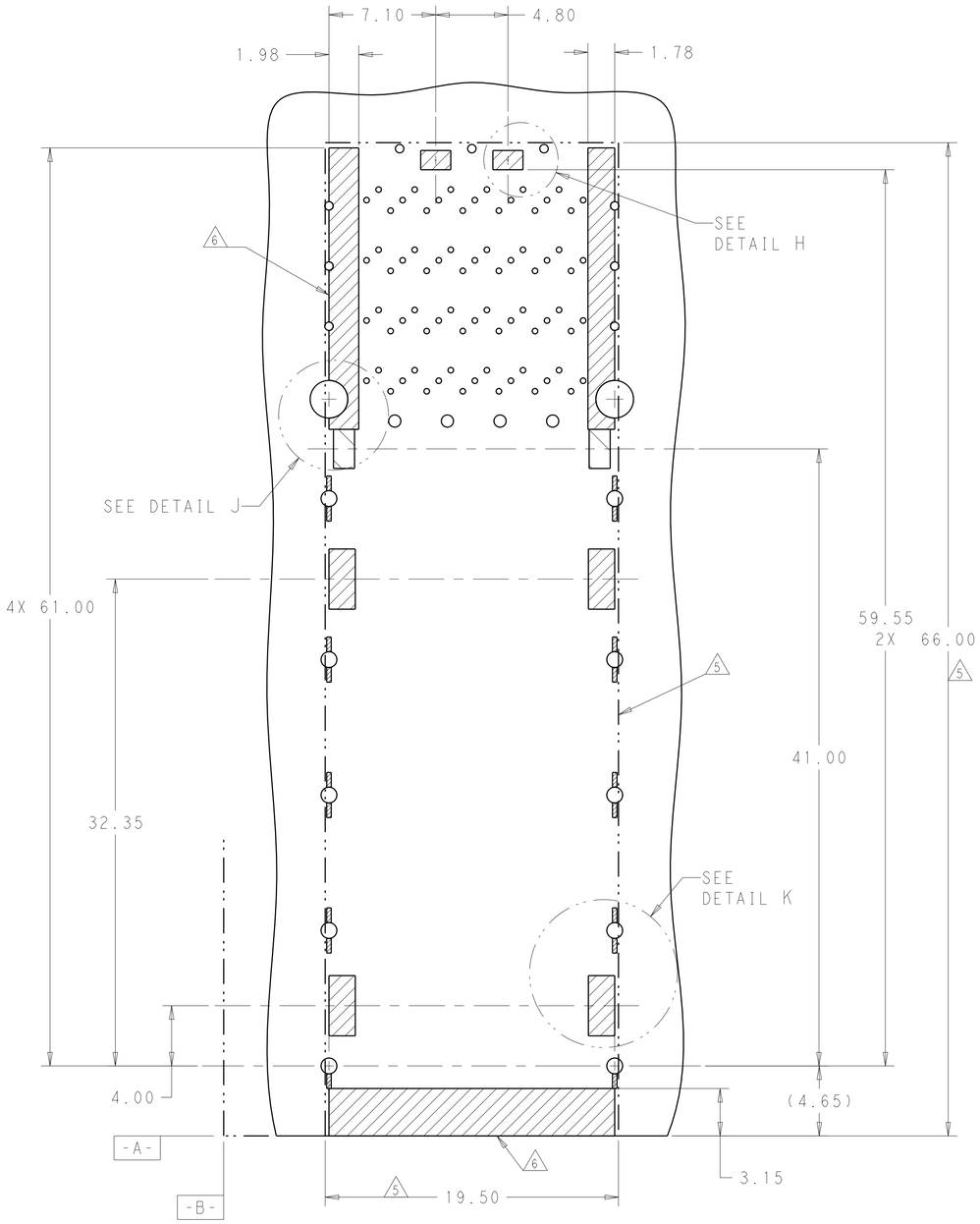

KEEPOUT AREAS FOR 2LP APPLICATION
COMPONENT SIDE OF BOARD
SCALE 5:1

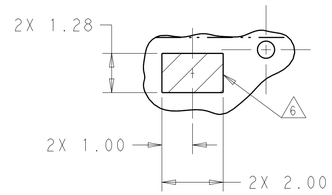

DETAIL H
SCALE 10:1

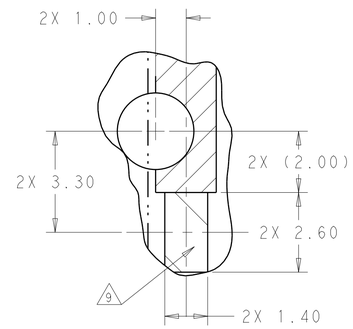

DETAIL J
LED PADS
SCALE 10:1

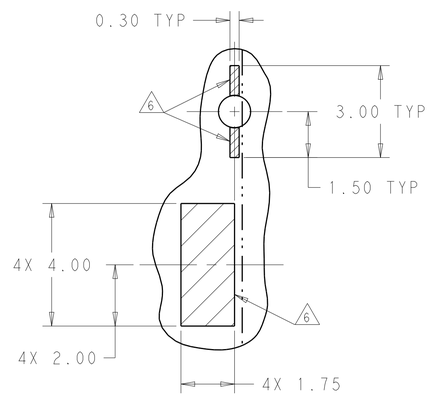

DETAIL K
SCALE 10:1

THIS DRAWING IS A CONTROLLED DOCUMENT.

DIMENSIONS: mm

TOLERANCES UNLESS OTHERWISE SPECIFIED:
0 PLC ±-
1 PLC ±0.25
2 PLC ±0.15
3 PLC ±-
4 PLC ±-
ANGLES ±-

MATERIAL - SEE NOTE 1
FINISH - -

DWN M SHIRK 16JAN2013
CHK D SZCZESNY 16JAN2013
APVD -
PRODUCT SPEC 108-60102
APPLICATION SPEC 114-60015
WEIGHT -

TE Connectivity

NAME CAGE AND CONNECTOR ASSEMBLY, WITH EMI SPRING FINGERS, THRU BEZEL, 2X1, ZQSFP+ STACKED

SIZE A1 | CAGE CODE 00779 | DRAWING NO C-2227669 | RESTRICTED TO -

CUSTOMER DRAWING | SCALE 4:1 | SHEET 1 OF 5 | REV A

THIS DRAWING IS UNPUBLISHED. RELEASED FOR PUBLICATION 20
© COPYRIGHT 20 BY TYCO ELECTRONICS CORPORATION ALL RIGHTS RESERVED.

LOC	DIST	REVISIONS				
		P	LTR	DESCRIPTION	DATE	DWN	APVD
			-	SEE SHEET 1	-	-	-

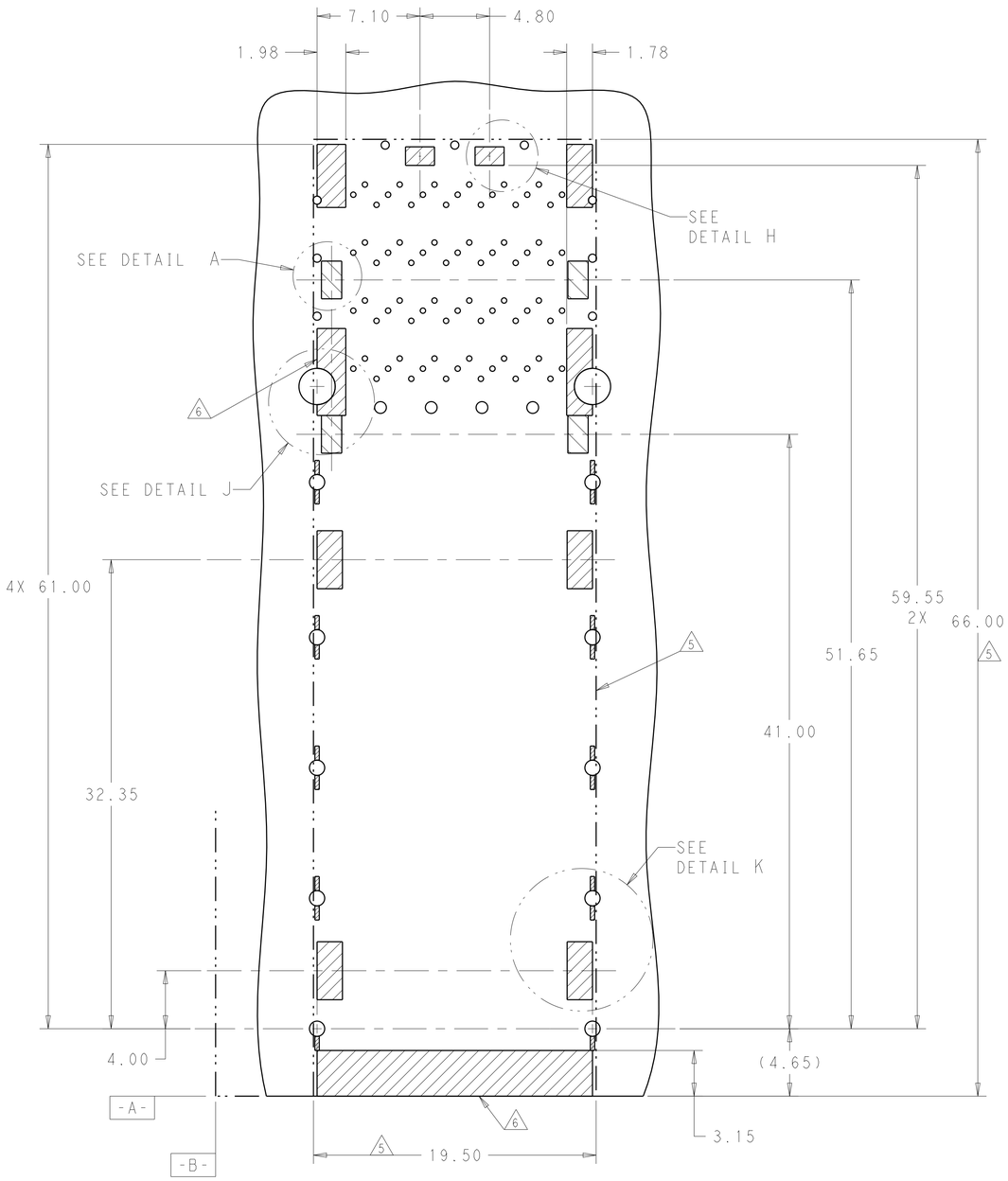

KEEPOUT AREAS FOR 4 LP APPLICATON
COMPONENT SIDE OF BOARD
SCALE 5:1

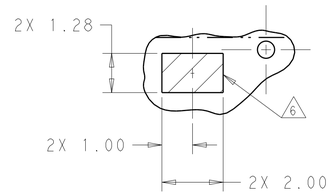

DETAIL H
SCALE 10:1

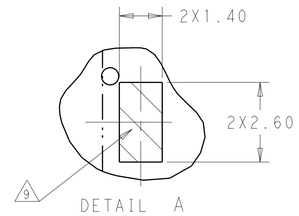

DETAIL A
SCALE 10:1

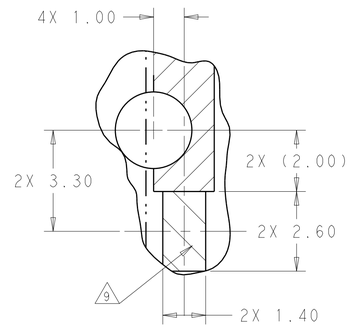

DETAIL J
LED PADS
SCALE 10:1

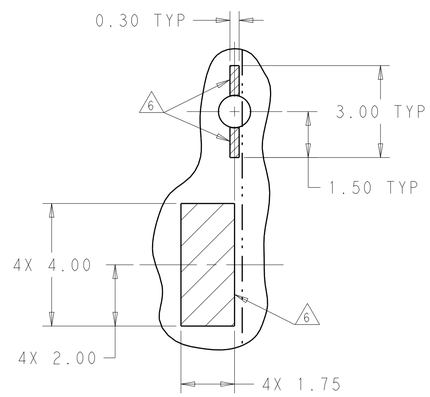

DETAIL K
SCALE 10:1

THIS DRAWING IS A CONTROLLED DOCUMENT.

DIMENSIONS: mm

TOLERANCES UNLESS OTHERWISE SPECIFIED:
0 PLC ±-
1 PLC ±0.25
2 PLC ±0.15
3 PLC ±-
4 PLC ±-
ANGLES ±-

MATERIAL - SEE NOTE 1
FINISH - -

DWN M SHIRK 16JAN2013
CHK D SZCZESNY 16JAN2013
APVD -
PRODUCT SPEC 108-60102
APPLICATION SPEC 114-60015
WEIGHT -

TE Connectivity

NAME CAGE AND CONNECTOR ASSEMBLY, WITH EMI SPRING FINGERS, THRU BEZEL, 2X1, ZQSFP+ STACKED

SIZE A1 | CAGE CODE 00779 | DRAWING NO C-2227669 | RESTRICTED TO -

CUSTOMER DRAWING | SCALE 4:1 | SHEET 1 OF 5 | REV A

4805 (3/11)

Компания «ЭлектроПласт» предлагает заключение долгосрочных отношений при поставках импортных электронных компонентов на взаимовыгодных условиях!

Наши преимущества:

- Оперативные поставки широкого спектра электронных компонентов отечественного и импортного производства напрямую от производителей и с крупнейших мировых складов;
- Поставка более 17-ти миллионов наименований электронных компонентов;
- Поставка сложных, дефицитных, либо снятых с производства позиций;
- Оперативные сроки поставки под заказ (от 5 рабочих дней);
- Экспресс доставка в любую точку России;
- Техническая поддержка проекта, помощь в подборе аналогов, поставка прототипов;
- Система менеджмента качества сертифицирована по Международному стандарту ISO 9001;
- Лицензия ФСБ на осуществление работ с использованием сведений, составляющих государственную тайну;
- Поставка специализированных компонентов (Xilinx, Altera, Analog Devices, Intersil, Interpoint, Microsemi, Aeroflex, Peregrine, Syfer, Eurofarad, Texas Instrument, Miteq, Cobham, E2V, MA-COM, Hittite, Mini-Circuits,General Dynamics и др.);

Помимо этого, одним из направлений компании «ЭлектроПласт» является направление «Источники питания». Мы предлагаем Вам помощь Конструкторского отдела:

- Подбор оптимального решения, техническое обоснование при выборе компонента;
- Подбор аналогов;
- Консультации по применению компонента;
- Поставка образцов и прототипов;
- Техническая поддержка проекта;
- Защита от снятия компонента с производства.

Как с нами связаться

Телефон: 8 (812) 309 58 32 (многоканальный)
Факс: 8 (812) 320-02-42
Электронная почта: org@eplast1.ru
Адрес: 198099, г. Санкт-Петербург, ул. Калинина, дом 2, корпус 4, литера А.