S663 Preset Rate/Totalizer Counter

- ***Easily programmed from the front panel***
- ***Remote Reset capability***
- ***Input variety: Quadrature, Switch, TTL, CMOS, NAMUR, PNP, NPN***
- ***Software functions include:***
  - ***Password***
  - ***Set Point Programming***
  - ***Display Scaling***
  - ***Decimal Point Selection***

The S663 is a multi-function counter that allows the end user to track the rate (speed) of a product and continuously monitor the product quantity for a given process. The count and rate displays have separate programmable decimal point settings and scaling values.

The counter is powered from 120 or 240VAC and has a non-volatile EEPROM to retain all programming and count information when the power source is removed or interrupted. An option 12DCV excitation output module can provide power for external sensors.

Optional field-replaceable single/dual relay modules enhance the counter from a passive display device to an integral control element for your application. This versatile counter has latching, boundary or timed (0.01 to 599.99 seconds) output modes.

Mounting Requirements

The S660 series 1/8 DIN counters require a panel cutout of 1.77" (45mm) high by 3.62" (92mm) wide. To install the counter into a panel cutout, remove the clips from the side of the meter. Slide the meter through your panel cutout, then slide the mounting clips back on the meter. Press evenly to ensure a proper fit.

Specifications

DISPLAY	
Type	6-digit, 7-segment, red LED
Height	0.56" (14.2mm)
Decimal Point	User-programmable
Count Direction	"+" indication implied, "-" indication displayed
Display Range	-99,999 to +999,999
Output Indicators	1 and 2
POWER REQUIREMENTS	
AC Voltages	120, 240VAC, ±10%
Power Consumption	3VA
INPUT RATINGS	
Current Sinking	10KΩ, 5% Resistor pull-up to (9.0 - 16DCV) ±10%
Current Sourcing	5.1KΩ, 5% Resistor pull-down to common
Minimum Pulse Width	~5µs
Low Pass Filter	<200Hz
Low Bias	VLT = 1.6V ±10% VUT = 3.6V ±10%
High Bias	VLT = 5.0V ±10% VUT = 7.0V ±10%
Count Rate	20KHz (Pulse Max) 5KHz (Quadrature X4 Max)
Maximum Voltage Input A, B, and User	30DCV (Max)
INPUT	
User Input	(Rate channel reset) Count on the rate channel is reset when the User Input is pulled low.
Standard Input	VLT ≦0.2 DCV guaranteed low, VUT = 3.0 DCV(max)
Quadrature Input	VLT ≦ 0.9 DCV VUT =3.15 DCV (max)
ENVIRONMENTAL	
Operating Temp.	0°C to +40°C
Storage Temp.	-10 °C to +60°C
Relative Humidity	0-80% non-condensing for temperatures less than 32°C, decreasing linearly to 50% at 40°C
Ambient Temperature	25°C
Temp. Coefficient (per °C)	±100ppm/ °C
Warmup Time	15 minutes
MECHANICAL	
Bezel	3.93" x 2.04" x .52" (99.8mm x 51.8mm x 13.2mm)
Depth	3.24" (82.3mm)
Panel Cutout	3.62" x 1.77" (92mm x 45mm)
Case Material	PBT-ABS
Weight	9oz (255.1g)

Ordering Information

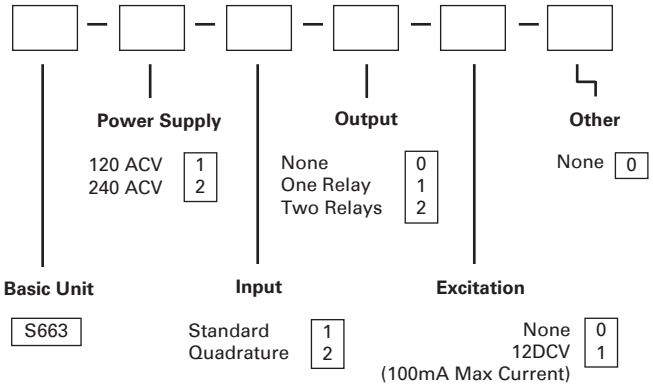

Dimensions - S660, S661, S662, S663, S664

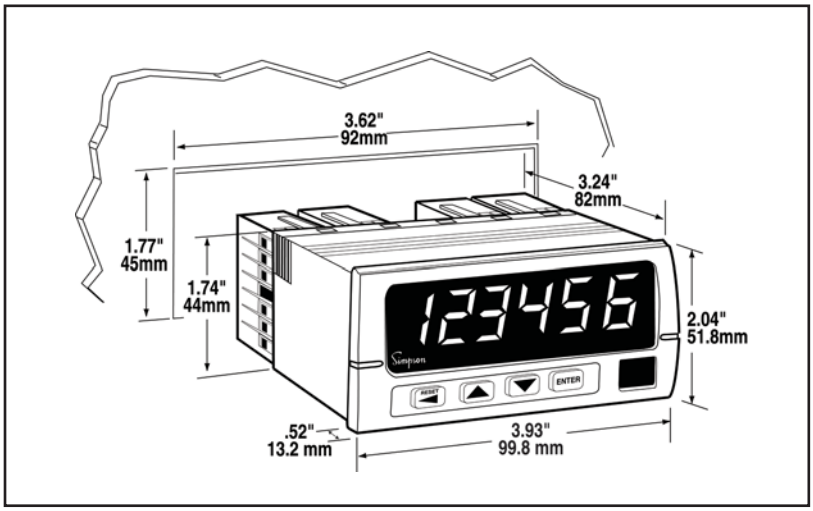

Accessories

Chariot

The Chariot is used to mount most cube-style quadrature encoders and measuring wheels. Made of anodized aluminum, the chariot includes mounting hardware and selectable pivotal points. Wheels, tires, and flexible shaft couplings are sold separately.

Catalog No. 46012

Flexible Shaft Couplings

The one-piece flexible coupling connects the shaft of a cube-style encoder to an ancillary equipment shaft without worry of misalignment of rotary frequency. The coupling ensures minimum windup, minimum rotary oscillation, and no hysteresis.

A Simpson 12" anodized aluminum measuring wheel is the right choice to complete the setup of a length measurement system. Whether the application requires one or two, Simpson's measuring wheels will perform accurately and reliably throughout the measuring process. Also included on the measuring wheel is a printed alignment scale which assists in the installation and measurement of the length measurement system. Simpson offers four replaceable durometer tires that consist of a black tire that has a longer life span and three non marking tires. The three non marking tires are for delicate materials such as plastics, textiles, wood, metal and paper to prevent tearing, damage or marking of delicate materials.

Description	Catalog No.
Coupling: For connecting an encoder to a 3/8" shaft	46002
Coupling package: For connecting an encoder to 1/4" or 5/16" diameter shaft*	46003

*Package includes: One flexible coupling (1/2" I.D.) and three reducing inserts (1/4", 5/16", 3/8").

Tire Durometer	Catalog No.
80A, black tire; longer service life for plastics, metals	46004
83A, non-marking tire for textiles, medium textures	46005
92A, non-marking tire for plastics, metals, coarse wood	46006
70A, non-marking tire for soft textiles	46007

Компания «ЭлектроПласт» предлагает заключение долгосрочных отношений при поставках импортных электронных компонентов на взаимовыгодных условиях!

Наши преимущества:

- Оперативные поставки широкого спектра электронных компонентов отечественного и импортного производства напрямую от производителей и с крупнейших мировых складов;
- Поставка более 17-ти миллионов наименований электронных компонентов;
- Поставка сложных, дефицитных, либо снятых с производства позиций;
- Оперативные сроки поставки под заказ (от 5 рабочих дней);
- Экспресс доставка в любую точку России;
- Техническая поддержка проекта, помощь в подборе аналогов, поставка прототипов;
- Система менеджмента качества сертифицирована по Международному стандарту ISO 9001;
- Лицензия ФСБ на осуществление работ с использованием сведений, составляющих государственную тайну;
- Поставка специализированных компонентов (Xilinx, Altera, Analog Devices, Intersil, Interpoint, Microsemi, Aeroflex, Peregrine, Syfer, Eurofarad, Texas Instrument, Miteq, Cobham, E2V, MA-COM, Hittite, Mini-Circuits,General Dynamics и др.);

Помимо этого, одним из направлений компании «ЭлектроПласт» является направление «Источники питания». Мы предлагаем Вам помощь Конструкторского отдела:

- Подбор оптимального решения, техническое обоснование при выборе компонента;
- Подбор аналогов;
- Консультации по применению компонента;
- Поставка образцов и прототипов;
- Техническая поддержка проекта;
- Защита от снятия компонента с производства.

Как с нами связаться

Телефон: 8 (812) 309 58 32 (многоканальный)
Факс: 8 (812) 320-02-42
Электронная почта: org@eplast1.ru
Адрес: 198099, г. Санкт-Петербург, ул. Калинина, дом 2, корпус 4, литера А.