Flexis 32-bit Microcontrollers

MCF51JE256/128

Ultra-low-power MCU with USB connectivity

Energy Efficient Solutions optimized for low power

Target Applications

- HVAC building control systems
- PC peripherals
- Lighting control systems
- Industrial networking products
- Portable medical devices

Overview

The MCF51JE256/128 (JE256/128) provides ultra-low-power operation, USB connectivity and high measurement accuracy, all in a single 32-bit microcontroller, allowing designers to develop a more fully featured system at a lower cost. The JE256/128 integrates high-resolution ADC and DAC modules and a rich peripheral set including a USB 2.0 host/device/OTG controller, multiple serial interfaces and an external bus interface.

The JE256/128 is part of the Freescale Flexis microcontroller series, which includes both 8-bit S08 and 32-bit V1 ColdFire microcontrollers that have a common set of peripherals and development tools to deliver the ultimate in migration flexibility. The JE256/128 family is also easy to use. Freescale provides a comprehensive suite of development tools and software to help developers design quickly and easily.

MCF51JE256 Block Diagram

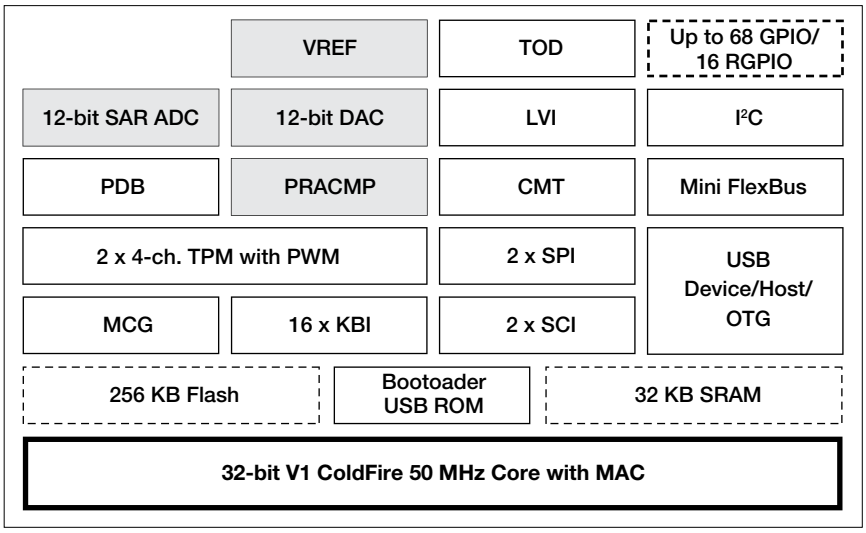

Modular Tower Development System

TWR-MCF51JE-KIT ($119 USD*)

TWR-MCF51JE ($69 USD*)

The Freescale Tower development system provides the user with a modular, reconfigurable demonstration and development platform.

The TWR-MCF51JE-KIT soldered with 100LQFP MCF51JE256 consists of:

- TWR-MCF51JE stand-alone development board
- TWR-SER serial boards that support USB and RS232
- TWR-ELEV elevator board that connects the MCU and serial boards
- USB cable

freescale semiconductor

The TWR-MCF51JE can also be ordered independently. A getting-started DVD included with the board includes necessary software, documents and resources to jumpstart new product development.

CodeWarrior Development Studio for Microcontrollers v6.3/10.x

Special Edition (Complimentary)**
CodeWarrior Development Studio for Microcontrollers is an integrated tool suite that supports software development for Freescale's microcontrollers. Designers can further accelerate application development with the help of the award-winning Processor Expert tool in the CodeWarrior tool suite.

Freescale MQX RTOS and USB Software Stack (complimentary**)

With the powerful integration of JE256/128 family, Freescale provides full production source code of Freescale MQX software:

- RTOS: Full priority-based, pre-emptive scheduler
- USB host/device
- MS-DOS file system (MFS)

Product Selector Guide

Part Number	Temp. Ranges	Package
MCF51JE256CML	-40°C to +85°C	104 MAPBGA
MCF51JE256CLL	-40°C to +85°C	100 LQFP
MCF51JE256CMB	-40°C to +85°C	81 MAPBGA
MCF51JE256CLK	-40°C to +85°C	80 LQFP
MCF51JE128CMB	-40°C to +85°C	81 MAPBGA
MCF51JE128CLK	-40°C to +85°C	80 LQFP
MCF51JE256VML	-40°C to +105°C	104 MAPBGA
MCF51JE256VLL	-40°C to +105°C	100 LQFP
MCF51JE256VMB	-40°C to +105°C	81 MAPBGA
MCF51JE256VLK	-40°C to +105°C	80 LQFP
MCF51JE128VMB	-40°C to +105°C	81 MAPBGA
MCF51JE128VLK	-40°C to +105°C	80 LQFP

Features	Benefits
CPU and System Configuration	
• 32-bit V1 ColdFire CPU Offering 46 MIPS at 50 MHz • 1.8V to 3.6V single supply	• Offers high performance across the entire voltage range
On-Chip Memory	
• Up to 256 KB flash • Up to 32 KB SRAM • Mini FlexBus (external bus interface)	• Allows the user to take full advantage of in-application re-programmability benefits in any environment • Security circuitry helps to prevent unauthorized RAM access • Glueless connection to external memory devices
Power Management	
• Low-power operation mode	• Low-power Stop 2 current: 550 nA with 32K of SRAM enabled and active POR • 6 uS wake-up time from Stop 3 • 32 kHz oscillator for low-power time keeping • Rapid response to interrupts from the low-power sleep mode
Analog Related Peripherals	
• 12-bit ADC • 12-bit DAC • Programmable delay block • VREF (voltage reference)	• High-resolution and high-accuracy ADC provides accurate signal acquisition • Digital-to-analog converter with clock gating optimized for low-power usage • PDB precisely triggers ADC and DAC blocks to complete sensor biasing and measurement (i.e. glucometry strips) • VREF accuracy is 33 ppm/°C from 0 °C to 50°C
Communication Peripherals	
• USB 2.0 controller • Dual asynchronous SCIs • Inter IC-BUS (I^2C) • Dual synchronous SPI • (1 x 64-bit FIFO SPI)	• USB device/host/On-The-Go controller • On-chip transceiver and 3.3 volt regulator reduces system cost • Serial communication interface provides a simple, efficient method of data exchange between devices. Option to connect analog comparator to SCI for opto-isolation applications • I^2C port enables increased system memory by using an additional I^2C EEPROM • Two SPIs allow two separate dedicated devices, for example, one SPI dedicated to a ZigBee® transceiver and the other to MCUs or peripherals. SPI FIFO allows better performance to drive a graphic LCD.
Software and Tools	
• Background debug mode (BDM) for in-circuit debugging • Complimentary Freescale MQX software solutions, RTOS, USB, file system and strong third-party alliance network • Medical applications USB stack • Tower development system	• Real-time trace and debug support • Value added tools and software, stacks and RTOS • Standardize with the "Continua Ready" personal health care device (PHDC) USB solution • The Freescale Tower System is a modular, reconfigurable demonstration and development platform

As other USB MCUs from Freescale, the JE256/128 devices are supported by USB stack with MSD, HID, CDC and PHDC classes. This USB stack can also be used for medical applications.

* Prices indicated are MSRP
** Subject to license agreement

Learn more: For current information about Freescale products and documentation, please visit **freescale.com/MCF51JE**.

Freescale, the Freescale logo, CodeWarrior, ColdFire, Flexis and Processor Expert are trademarks of Freescale Semiconductor, Inc., Reg. U.S. Pat. & Tm. Off. All other product or service names are the property of their respective owners. © 2010 Freescale Semiconductor, Inc.

Document Number: MCF51JE256FS REV 1

freescale semiconductor

Компания «ЭлектроПласт» предлагает заключение долгосрочных отношений при поставках импортных электронных компонентов на взаимовыгодных условиях!

Наши преимущества:

- Оперативные поставки широкого спектра электронных компонентов отечественного и импортного производства напрямую от производителей и с крупнейших мировых складов;
- Поставка более 17-ти миллионов наименований электронных компонентов;
- Поставка сложных, дефицитных, либо снятых с производства позиций;
- Оперативные сроки поставки под заказ (от 5 рабочих дней);
- Экспресс доставка в любую точку России;
- Техническая поддержка проекта, помощь в подборе аналогов, поставка прототипов;
- Система менеджмента качества сертифицирована по Международному стандарту ISO 9001;
- Лицензия ФСБ на осуществление работ с использованием сведений, составляющих государственную тайну;
- Поставка специализированных компонентов (Xilinx, Altera, Analog Devices, Intersil, Interpoint, Microsemi, Aeroflex, Peregrine, Syfer, Eurofarad, Texas Instrument, Miteq, Cobham, E2V, MA-COM, Hittite, Mini-Circuits,General Dynamics и др.);

Помимо этого, одним из направлений компании «ЭлектроПласт» является направление «Источники питания». Мы предлагаем Вам помощь Конструкторского отдела:

- Подбор оптимального решения, техническое обоснование при выборе компонента;
- Подбор аналогов;
- Консультации по применению компонента;
- Поставка образцов и прототипов;
- Техническая поддержка проекта;
- Защита от снятия компонента с производства.

Как с нами связаться

Телефон: 8 (812) 309 58 32 (многоканальный)
Факс: 8 (812) 320-02-42
Электронная почта: org@eplast1.ru
Адрес: 198099, г. Санкт-Петербург, ул. Калинина, дом 2, корпус 4, литера А.