PRODUCT NUMBER	CONTACT PLATING PERFORMANCE LEVEL	PRESS FIT TAIL PLATING
84962-1YY	TELCORDIA CO	STANDARD (SnPb)
84962-1YYLF	TELCORDIA CO	LEAD FREE (Sn)

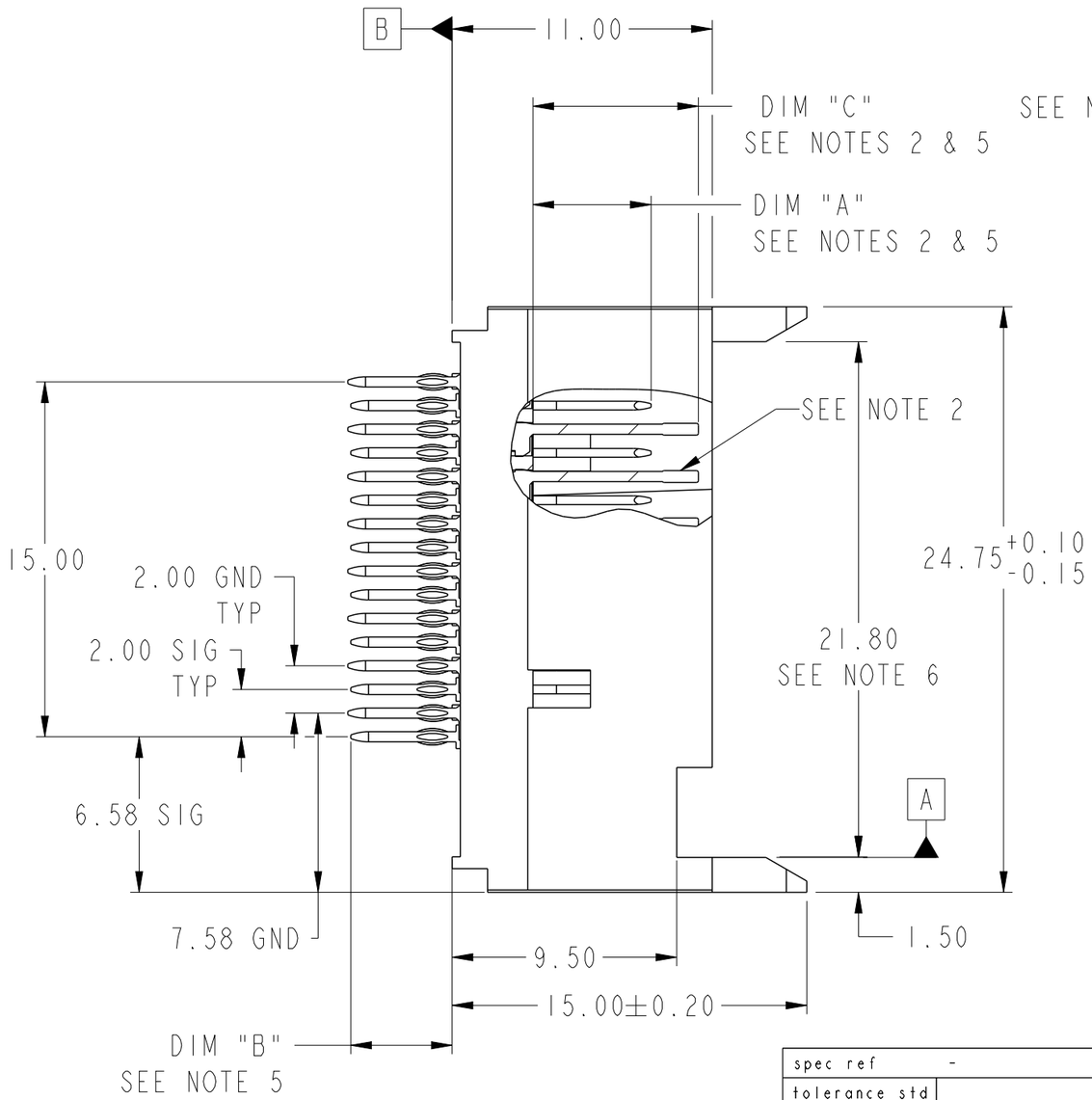

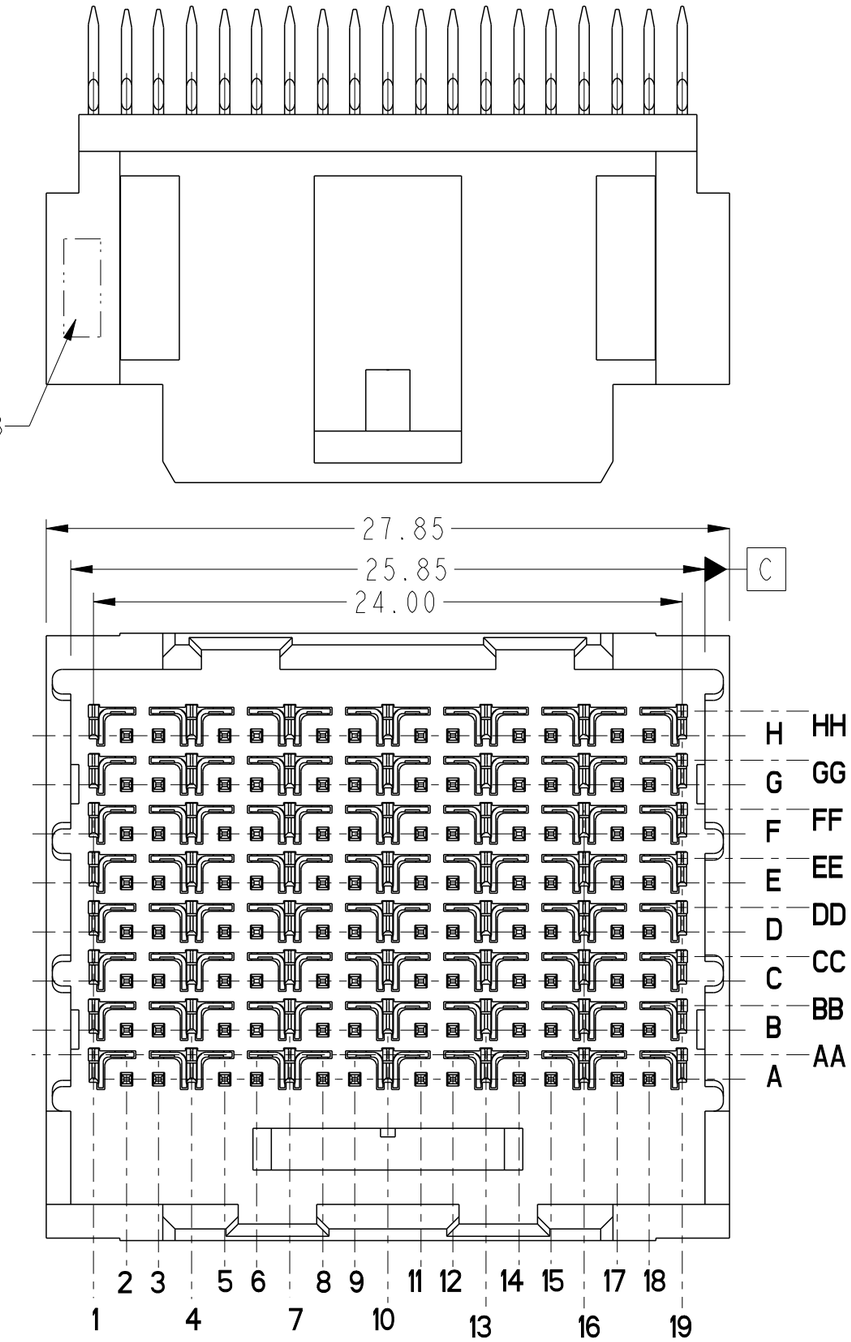

spec ref	-	dr	wcadmin	1999/12/17	projection	mm	size A3 / scale 4:1
tolerance std ASME Y14.5 -	TOLERANCES UNLESS OTHERWISE SPECIFIED	eng	K Ayyapparaj	2012/09/27			ecn no ELX-V-013035-1
		chr	-	-			
		appr	R Marshall	2012/10/01	product family	METRAL 3000	rel level Released

surface ASME Y14.5			
linear	0.X	±0.3
	0.XX	±0.10
	0.XXX	±0.050
angular	0°	±2°

FCi www.fci.com

title: VERTICAL SIGNAL HDR. 8 ROW P.F. 48 POS. SPECIAL LOAD

dwg no: 84962 rev: K

cat. no. | Product - Customer Drw | sheet 1 of 5

Copyright FCI.

PRODUCT NO.	ROW	DIM "A"	GROUND PIN MATE LENGTH	DIM "B" SIGNAL	DIM "B" GND
84962-X01 SEE NOTE 7 LEAD FREE OPTION	H	5.00	7.00	4.30	4.30
	G	5.00	7.00	4.30	4.30
	F	5.00	7.00	4.30	4.30
	E	5.00	7.00	4.30	4.30
	D	5.00	7.00	4.30	4.30
	C	5.00	7.00	4.30	4.30
	B	5.00	7.00	4.30	4.30
	A	5.00	7.00	4.30	4.30
84962-X02 SEE NOTE 7 LEAD FREE OPTION	H	5.75	7.00	4.30	4.30
	G	5.75	7.00	4.30	4.30
	F	5.75	7.00	4.30	4.30
	E	5.75	7.00	4.30	4.30
	D	5.75	7.00	4.30	4.30
	C	5.75	7.00	4.30	4.30
	B	5.75	7.00	4.30	4.30
	A	5.75	7.00	4.30	4.30
84962-X03 SEE NOTE 7 LEAD FREE OPTION	H	6.50	7.00	4.30	4.30
	G	6.50	7.00	4.30	4.30
	F	6.50	7.00	4.30	4.30
	E	6.50	7.00	4.30	4.30
	D	6.50	7.00	4.30	4.30
	C	6.50	7.00	4.30	4.30
	B	6.50	7.00	4.30	4.30
	A	6.50	7.00	4.30	4.30

PRODUCT NO.	ROW	DIM "A"	GROUND PIN MATE LENGTH	DIM "B" SIGNAL	DIM "B" GND
84962-X10 SEE NOTE 7 LEAD FREE OPTION	H	5.00	7.00	3.40	3.40
	G	5.00	7.00	3.40	3.40
	F	5.00	7.00	3.40	3.40
	E	5.00	7.00	3.40	3.40
	D	5.00	7.00	3.40	3.40
	C	5.00	7.00	3.40	3.40
	B	5.00	7.00	3.40	3.40
	A	5.00	7.00	3.40	3.40
84962-X11 SEE NOTE 7 LEAD FREE OPTION	H	5.75	7.00	3.40	3.40
	G	5.75	7.00	3.40	3.40
	F	5.75	7.00	3.40	3.40
	E	5.75	7.00	3.40	3.40
	D	5.75	7.00	3.40	3.40
	C	5.75	7.00	3.40	3.40
	B	5.75	7.00	3.40	3.40
	A	5.75	7.00	3.40	3.40
84962-X12 SEE NOTE 7 LEAD FREE OPTION	H	6.50	7.00	3.40	3.40
	G	6.50	7.00	3.40	3.40
	F	6.50	7.00	3.40	3.40
	E	6.50	7.00	3.40	3.40
	D	6.50	7.00	3.40	3.40
	C	6.50	7.00	3.40	3.40
	B	6.50	7.00	3.40	3.40
	A	6.50	7.00	3.40	3.40

Copyright FCI.

spec ref	-		
tolerance std	ASME Y14.5 -	TOLERANCES UNLESS OTHERWISE SPECIFIED	
surface	✓	linear	0.X ±0.3
			0.XX ±0.10
			0.XXX ±0.050
ASME Y14.5		angular	0° ±2°

dr	wcadmin	1999/12/17
eng	K Ayyapparaj	2012/09/27
chr	-	-
appr	R Marshall	2012/10/01

projection | mm | size A3 | scale 4:1

ecn no ELX-V-013035-1

product family METRAL 3000 | rel level Released

title VERTICAL SIGNAL HDR. 8 ROW P.F. 48 POS. SPECIAL LOAD

dwg no 84962 | rev K

www.fci.com | cat. no. | Product - Customer Drw | sheet 2 of 5

Pro/E File - REV C - 2009-06-09

PDS: Rev :K STATUS:Released Printed: Oct 02, 2012

PRODUCT NUMBER
SEE SHEET 1

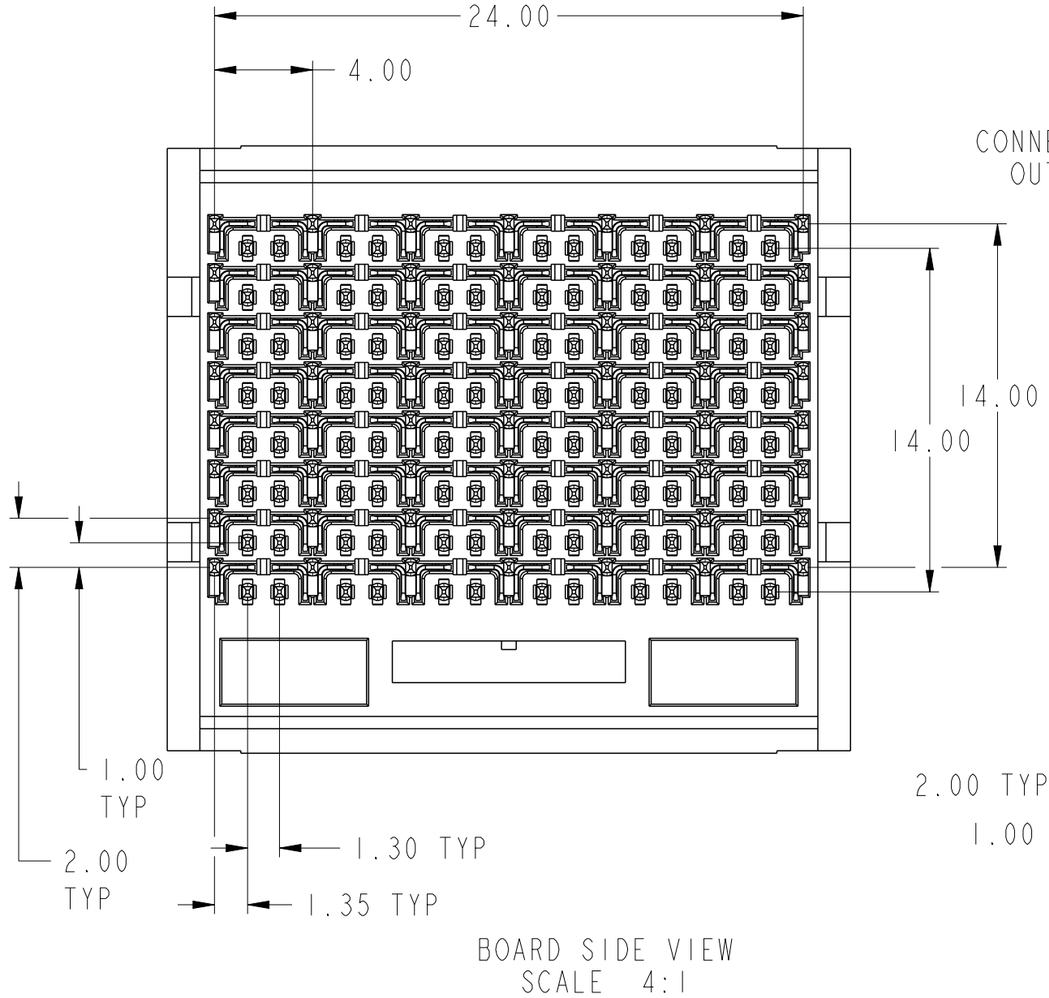

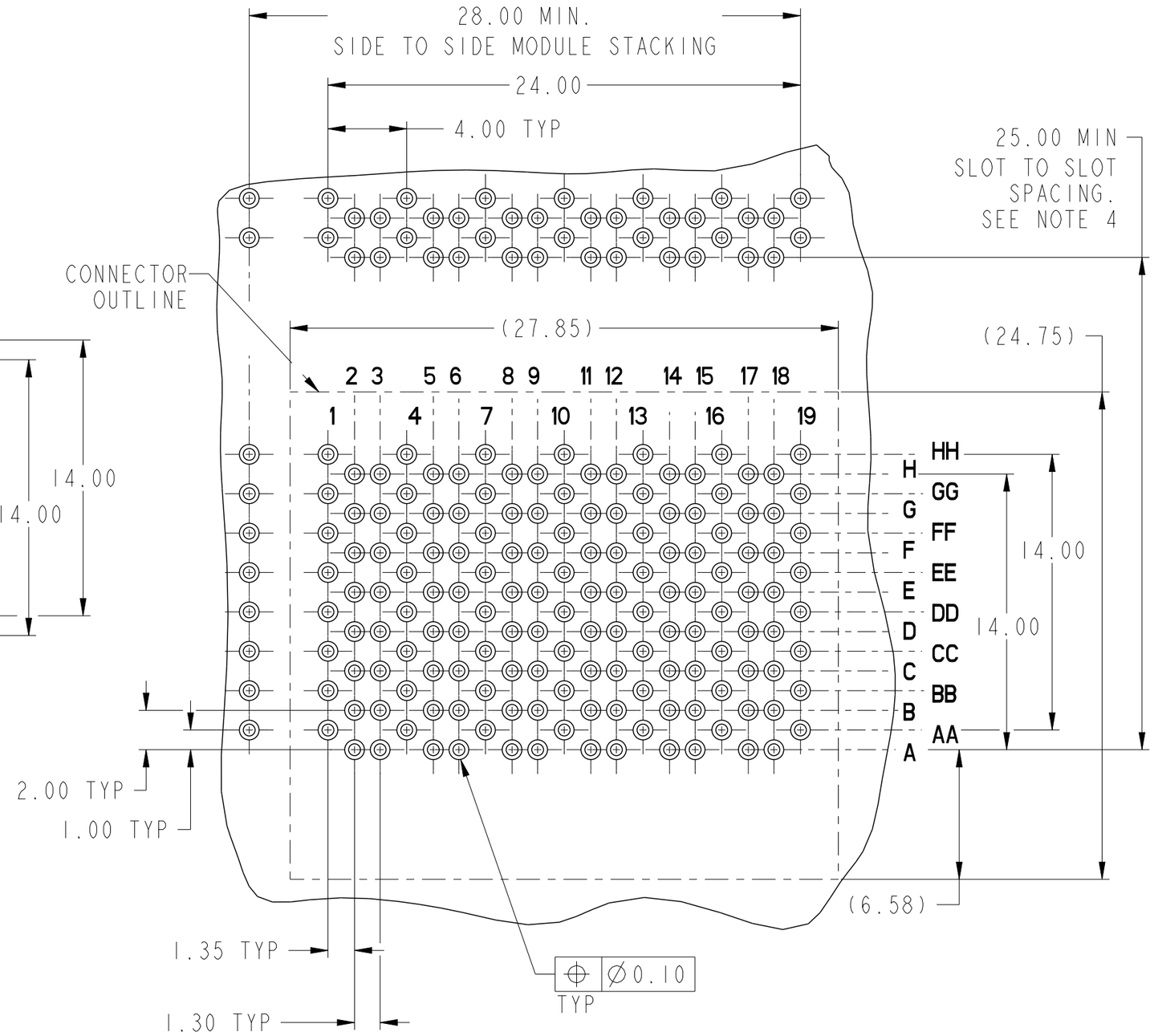

K REFER SHEET 5 FOR PRESS-FIT HOLES TABLE

spec ref	-			dr	wcadmin	1999/12/17	projection	mm	size A3 / scale 4:1
tolerance std ASME Y14.5 -	TOLERANCES UNLESS OTHERWISE SPECIFIED			eng	K Ayyapparaj	2012/09/27			
				chr	-	-			ecn no ELX-V-013035-1
				appr	R Marshall	2012/10/01	product family	METRAL 3000	rel level **Released**
surface ✓	linear	0.X	±0.3	FCi	title	VERTICAL SIGNAL HDR. 8 ROW	dwg no	84962	rev
		0.XX	±0.10			P.F. 48 POS. SPECIAL LOAD			K
		0.XXX	±0.050						
ASME Y14.5	angular	0°	±2°	www.fci.com	cat. no.		Product - Customer Drw		sheet 3 of 5

Copyright FCI.

PRODUCT NUMBER
SEE SHEET 1

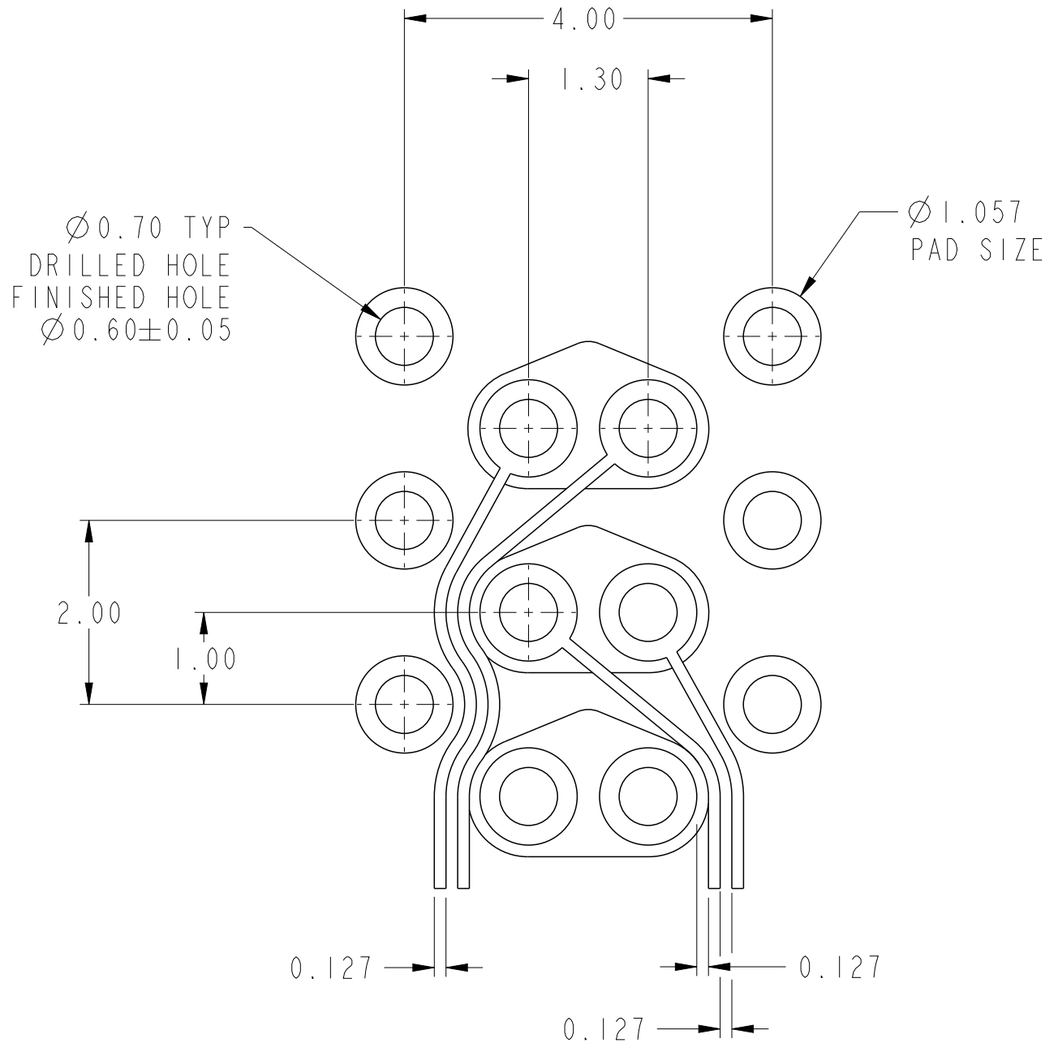

OPTION A (EDGE COUPLED)
METRAL - DIFFERENTIAL PCB
TRACE LAYOUT

SCALE 15:1

- 0.127 mm [0.005 in] TRACES MAX WITH 0.127 mm [0.005 in] GAPS

- 4 TRACES (2 PAIRS) PER LAYER

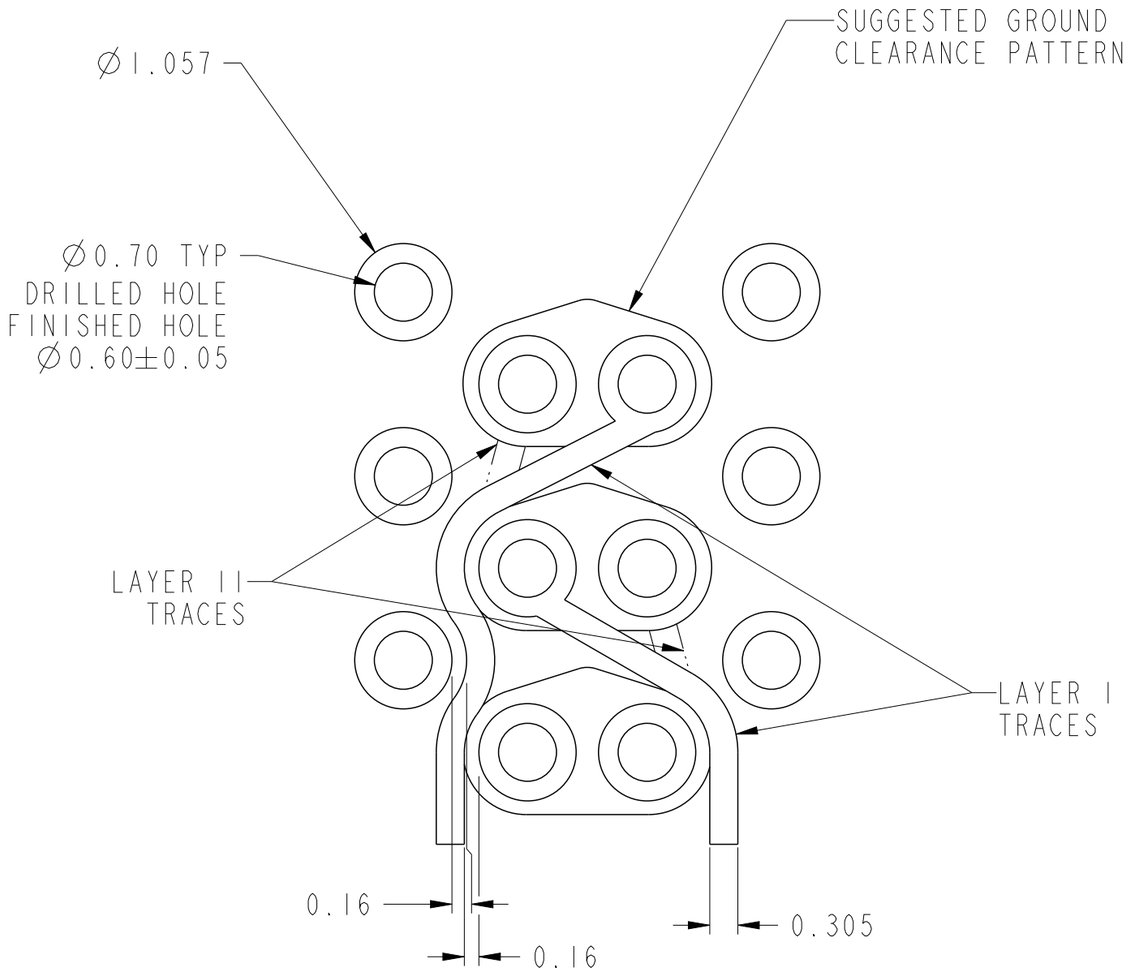

OPTION B (BROADSIDE COUPLED)
METRAL - DIFFERENTIAL
PCB TRACE LAYOUT

SCALE 15:1

- UP TO 0.305 mm [0.012 in] TRACES MAX WITH 0.16 mm [0.006 in] GAPS

- 2 TRACES PER LAYER

spec ref	-			dr	wcadmin	1999/12/17	projection	mm
tolerance std ASME Y14.5 -	TOLERANCES UNLESS OTHERWISE SPECIFIED			eng	K Ayyapparaj	2012/09/27		
				chr	-	-		
				appr	R Marshall	2012/10/01	product family	METRAL 3000
surface ✓	linear	0.X	±0.3	FCi	title	VERTICAL SIGNAL HDR. 8 ROW	dwg no	84962
		0.XX	±0.10			P.F. 48 POS. SPECIAL LOAD		
		0.XXX	±0.050					
ASME Y14.5	angular	0°	±2°	www.fci.com	cat. no.		Product - Customer Drw	

size	scale	rev
A3	1:1	K
ecn no	ELX-V-013035-1	
rel level	Released	
sheet 4 of 5		

Copyright FCI.

Pro/E File - REV C - 2009-06-09

RECOMMENDED PRESS-FIT HOLES SIZES	RECOMMENDED SIZES FOR SnPb PLATED HOLES	RECOMMENDED SIZES FOR IMMERSION Au PLATED HOLES	RECOMMENDED SIZES FOR IMMERSION Ag PLATED HOLES	RECOMMENDED SIZES FOR IMMERSION Sn PLATED HOLES
DRILLED HOLE SIZE	∅0.705±0.025	∅0.75±0.025	∅0.75±0.025	∅0.75±0.025
FINISHED HOLE SIZE	∅0.60±0.05	∅0.63±0.05	∅0.63±0.05	∅0.63±0.05
COPPER PLATING THICKNESS	0.025 MIN	0.037±0.013	0.037±0.013	0.037±0.013
NICKEL PLATING THICKNESS		0.005±0.002µm		
PLATING THICKNESS	0.010±0.005µm	FLASH TO 0.002µm	0.40±0.25µm	1.20±0.30µm

K

NOTES:

1. BODY MATERIAL: LIQUID CRYSTAL POLYMER 30% GF
   FLAME RETARDANT IN ACCORDANCE WITH UL 94-VO.
   PIN MATERIAL: COPPER ALLOY

2. DIM "C" REFERENCES GROUND PIN AND DIM "A" REFERENCES SIGNAL PIN.

3. PRODUCT MARKING: PART NUMBER AND BATCH ID.

4. REFERENCE METRAL 3000 APPLICATION SPEC GS-20-012
   FOR MODULE APPLICATION AND REPAIR REQUIREMENTS.

5. DIMENSIONS AFTER INSERTION INTO CIRCUIT BOARD WITH FCI
   APPROVED TOOLING.

6. REFERENCE METRAL 3000 PRODUCT SPEC GS-12-138.

7. PRODUCTS WHERE THE PART NUMBER ENDS IN "LF" MEET
   EUROPEAN UNIONDIRECTIVES AND OTHER COUNTRY REGULATIONS
   AS DESCRIBED IN GS-22-008.
   ALL PRODUCTS WILL WITHSTAND EXPOSURE TO 260° FOR 60
   SECONDS IN A CONVECTION, INFRA-RED OR VAPOR PHASE
   REFLOW OVEN.
   FOR LEAD FREE PART NUMBERS ADD "LF" SUFFIX.
   EXAMPLE: 84962-1YYLF.

8. COMPANY LOGO LOCATED IN THIS AREA.

K 9. A K SYMBOL WILL BE NEXT TO ANY DIMENSION, VIEW, OR NOTE
   WHICH HAS BEEN MODIFIED WITH THE CURRENT DRAWING REVISION.

Copyright FCI.

spec ref	-	dr	wcadmin	1999/12/17	projection	mm	size A3 / scale 4:1
tolerance std ASME Y14.5 -	TOLERANCES UNLESS OTHERWISE SPECIFIED	eng	K Ayyapparaj	2012/09/27			
		chr	-	-			ecn no ELX-V-013035-1
		appr	R Marshall	2012/10/01	product family	METRAL 3000	rel level Released
surface ✓ ASME Y14.5	linear 0.X ±0.3; 0.XX ±0.10; 0.XXX ±0.050; angular 0° ±2°	FCI www.fci.com	title VERTICAL SIGNAL HDR. 8 ROW P.F. 48 POS. SPECIAL LOAD		dwg no 84962		rev K
			cat. no.		Product - Customer Drw		sheet 5 of 5

Pro/E File - REV C - 2009-06-09

PDS: Rev :K STATUS:Released Printed: Oct 02, 2012

Компания «ЭлектроПласт» предлагает заключение долгосрочных отношений при поставках импортных электронных компонентов на взаимовыгодных условиях!

Наши преимущества:

- Оперативные поставки широкого спектра электронных компонентов отечественного и импортного производства напрямую от производителей и с крупнейших мировых складов;
- Поставка более 17-ти миллионов наименований электронных компонентов;
- Поставка сложных, дефицитных, либо снятых с производства позиций;
- Оперативные сроки поставки под заказ (от 5 рабочих дней);
- Экспресс доставка в любую точку России;
- Техническая поддержка проекта, помощь в подборе аналогов, поставка прототипов;
- Система менеджмента качества сертифицирована по Международному стандарту ISO 9001;
- Лицензия ФСБ на осуществление работ с использованием сведений, составляющих государственную тайну;
- Поставка специализированных компонентов (Xilinx, Altera, Analog Devices, Intersil, Interpoint, Microsemi, Aeroflex, Peregrine, Syfer, Eurofarad, Texas Instrument, Miteq, Cobham, E2V, MA-COM, Hittite, Mini-Circuits,General Dynamics и др.);

Помимо этого, одним из направлений компании «ЭлектроПласт» является направление «Источники питания». Мы предлагаем Вам помощь Конструкторского отдела:

- Подбор оптимального решения, техническое обоснование при выборе компонента;
- Подбор аналогов;
- Консультации по применению компонента;
- Поставка образцов и прототипов;
- Техническая поддержка проекта;
- Защита от снятия компонента с производства.

Как с нами связаться

Телефон: 8 (812) 309 58 32 (многоканальный)
Факс: 8 (812) 320-02-42
Электронная почта: org@eplast1.ru
Адрес: 198099, г. Санкт-Петербург, ул. Калинина, дом 2, корпус 4, литера А.