Temperature measuring transducer - MACX MCR-SL-RTD-I-SP-NC - 2924320

Please be informed that the data shown in this PDF Document is generated from our Online Catalog. Please find the complete data in the user's documentation. Our General Terms of Use for Downloads are valid (http://phoenixcontact.com/download)

The illustration shows the versions with screw connection

Temperature transducer, converts signals from resistance thermometers and resistors into 0/4 - 20 mA signals. Freely programmable, 3-way electrical isolation.

Product Features

- Power supply possible via DIN rail connector
- Installation in zone 2, protection type "n" (EN 60079-15) permitted
- Programming during operation and also voltage-free using IFS-USB-PROG-ADAPTER programming adapter
- 3-way electrical isolation
- Configuration via software (FDT/DTM): sensor type, connection technology, measuring range, measuring unit, filter, alarm signal, and output range
- 0 ... 20 mA or 4 ... 20 mA output
- Input for resistance thermometers and resistance-type sensors
- Status indicator for supply voltage, cable, sensor, and module errors

Key Commercial Data

Packing unit	1 pc
Custom tariff number	85437090
Country of origin	Germany

Technical data

Note

Utilization restriction	EMC: class A product, see manufacturer's declaration in the download area

Temperature measuring transducer - MACX MCR-SL-RTD-I-SP-NC - 2924320

Technical data

Dimensions

Width	12.5 mm
Height	99 mm
Depth	114.5 mm

Ambient conditions

Ambient temperature (operation)	-20 °C ... 60 °C (Any mounting position)
Ambient temperature (storage/transport)	-40 °C ... 80 °C
Maximum altitude	≤ 2000 m
Permissible humidity (operation)	5 % ... 95 % (non-condensing)
Noise immunity	EN 61000-6-2 When being exposed to interference, there may be minimal deviations.
Degree of protection	IP20

Input data

Sensor types (RTD) that can be used	Pt, Ni, Cu sensors: 2, 3, 4-wire
Temperature measuring range	-200 °C ... 850 °C (Range depending on the sensor type)
Input signal range	0 Ω ... 2000 Ω
Cable resistance	50 Ω per line
Sensor input current	200 µA ... 1 mA
Measuring range span	> 50 K

Output data

Signal output	Current output
Current output signal	0 mA ... 20 mA
	4 mA ... 20 mA
Load/output load current output	≤ 500 Ω
Output ripple (current)	< 50 μA_{PP}
Behavior in the event of a sensor error	As per NE 43 or can be freely defined

Power supply

Nominal supply voltage	24 V DC
Supply voltage range	19.2 V DC ... 30 V DC (24 V DC -20%...+25%)
Max. current consumption	< 40 mA (24 V DC)
Power consumption	< 1 W

Connection data

Conductor cross section solid min.	0.2 mm²
Conductor cross section solid max.	1.5 mm²
Conductor cross section flexible min.	0.2 mm²

Temperature measuring transducer - MACX MCR-SL-RTD-I-SP-NC - 2924320

Technical data

Connection data

Conductor cross section flexible max.	1.5 mm²
Conductor cross section AWG min.	24
Conductor cross section AWG max.	16
Stripping length	8 mm
Connection method	Push-in connection

General

Temperature coefficient, typical	0.01 %/K
Step response (0–99%)	typ. 700 ms
	≤ 1100 ms
Alignment zero	± 5 %
Alignment span	± 5 %
Status display	Green LED (supply voltage, PWR)
	Red LED, flashing (line, sensor error, ERR)
	Red LED (module error, ERR)
Flammability rating according to UL 94	V0
Degree of pollution	2
Overvoltage category	II
Emitted interference	EN 61000-6-4
Housing material	PA 66-FR
Color	green
Designation	Input/output/power supply
Electrical isolation	2.5 kV (50 Hz, 1 min., test voltage)
	300 V_{rms} (Rated insulation voltage (overvoltage category II; degree of pollution 2, safe isolation as per EN 61010-1))
Designation	Input/output
Electrical isolation	375 V (Peak value in accordance with EN 60079-11)
Designation	Input/power supply
Electrical isolation	375 V (Peak value in accordance with EN 60079-11)
Conformance	CE-compliant, additionally EN 61326-1
ATEX	# II 3G Ex nA ic IIC T4 Gc X
UL, USA / Canada	UL 508 Listed
	UL 61010 Listed
	Class I, Div. 2, Groups A, B, C, D T4
	Class I, Zone 2, Group IIC T4
GL	C, EMC1

Temperature measuring transducer - MACX MCR-SL-RTD-I-SP-NC - 2924320

Technical data

Standards and Regulations

Noise emission	EN 61000-6-4
Flammability rating according to UL 94	V0
Conformance	CE-compliant, additionally EN 61326-1
ATEX	# II 3G Ex nA ic IIC T4 Gc X
UL, USA / Canada	UL 508 Listed
	UL 61010 Listed
	Class I, Div. 2, Groups A, B, C, D T4
	Class I, Zone 2, Group IIC T4
GL	C, EMC1

Classifications

eCl@ss

eCl@ss 4.0	27200206
eCl@ss 4.1	27200206
eCl@ss 5.0	27200206
eCl@ss 5.1	27210121
eCl@ss 6.0	27200206
eCl@ss 7.0	27200206
eCl@ss 8.0	27371503

ETIM

ETIM 2.0	EC001446
ETIM 3.0	EC001446
ETIM 4.0	EC001446
ETIM 5.0	EC002568

UNSPSC

UNSPSC 6.01	30211506
UNSPSC 7.0901	39121008
UNSPSC 11	39121008
UNSPSC 12.01	39121008
UNSPSC 13.2	39121008

Approvals

Approvals

Temperature measuring transducer - MACX MCR-SL-RTD-I-SP-NC - 2924320

Approvals

Approvals

UL Listed / cUL Listed / EAC / cULus Listed

Ex Approvals

UL Listed / cUL Listed / cULus Listed

Approvals submitted

Approval details

UL Listed

cUL Listed

EAC

cULus Listed

Drawings

Temperature measuring transducer - MACX MCR-SL-RTD-I-SP-NC - 2924320

Dimensional drawing

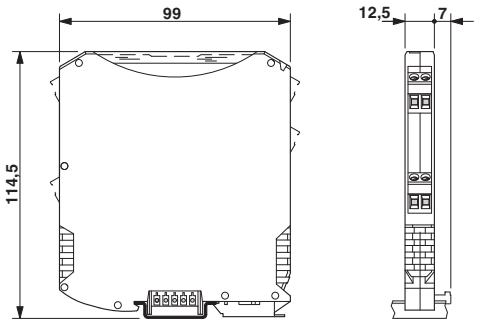

Block diagram

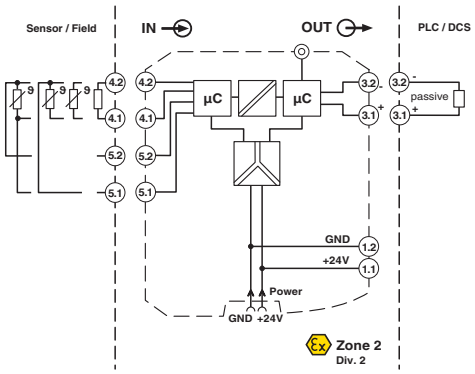

Phoenix Contact 2016 © - all rights reserved
http://www.phoenixcontact.com

Компания «ЭлектроПласт» предлагает заключение долгосрочных отношений при поставках импортных электронных компонентов на взаимовыгодных условиях!

Наши преимущества:

- Оперативные поставки широкого спектра электронных компонентов отечественного и импортного производства напрямую от производителей и с крупнейших мировых складов;
- Поставка более 17-ти миллионов наименований электронных компонентов;
- Поставка сложных, дефицитных, либо снятых с производства позиций;
- Оперативные сроки поставки под заказ (от 5 рабочих дней);
- Экспресс доставка в любую точку России;
- Техническая поддержка проекта, помощь в подборе аналогов, поставка прототипов;
- Система менеджмента качества сертифицирована по Международному стандарту ISO 9001;
- Лицензия ФСБ на осуществление работ с использованием сведений, составляющих государственную тайну;
- Поставка специализированных компонентов (Xilinx, Altera, Analog Devices, Intersil, Interpoint, Microsemi, Aeroflex, Peregrine, Syfer, Eurofarad, Texas Instrument, Miteq, Cobham, E2V, MA-COM, Hittite, Mini-Circuits,General Dynamics и др.);

Помимо этого, одним из направлений компании «ЭлектроПласт» является направление «Источники питания». Мы предлагаем Вам помощь Конструкторского отдела:

- Подбор оптимального решения, техническое обоснование при выборе компонента;
- Подбор аналогов;
- Консультации по применению компонента;
- Поставка образцов и прототипов;
- Техническая поддержка проекта;
- Защита от снятия компонента с производства.

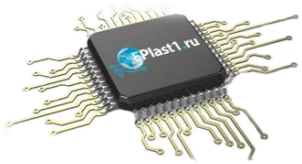

Как с нами связаться

Телефон: 8 (812) 309 58 32 (многоканальный)
Факс: 8 (812) 320-02-42
Электронная почта: org@eplast1.ru
Адрес: 198099, г. Санкт-Петербург, ул. Калинина, дом 2, корпус 4, литера А.