3M™ Shrunk Delta Ribbon (SDR) Connectors, 122 Series

.80 mm Surface Mount, Right Angle Receptacle, Shielded

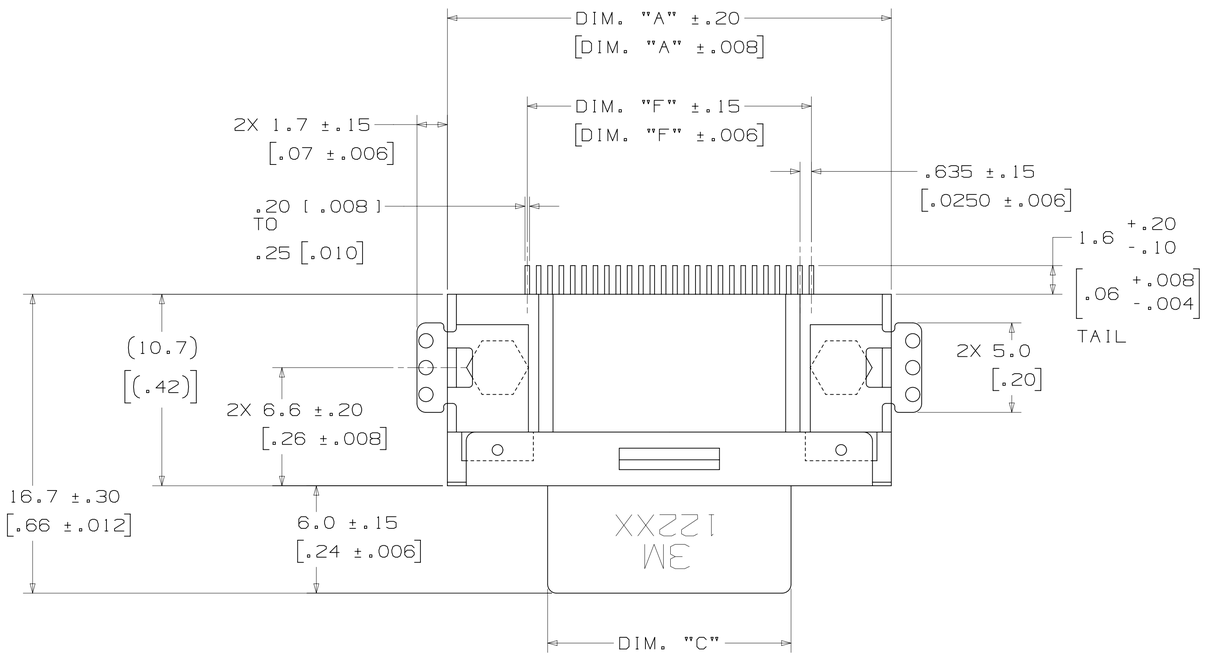

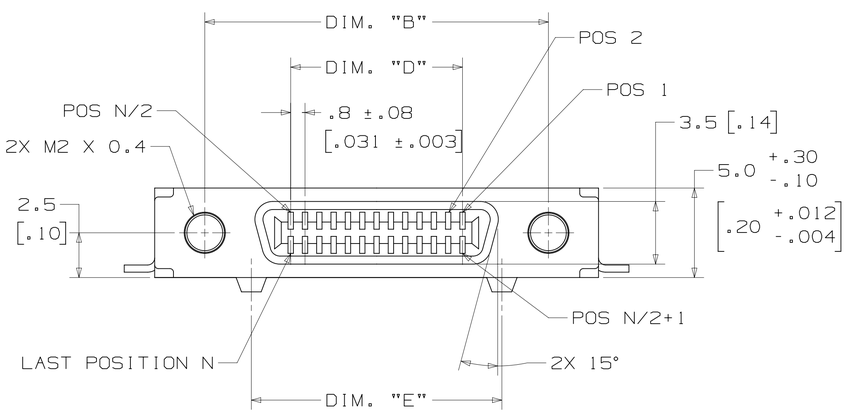

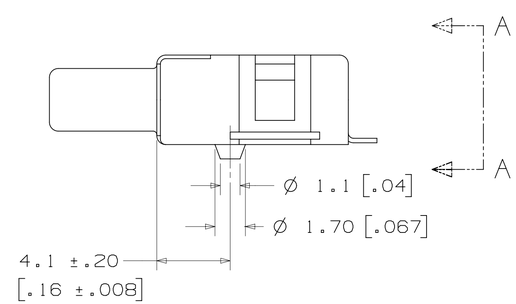

POSITION	DIM. "A"	DIM. "B"	DIM. "C"	DIM. "D"	DIM. "E"	DIM. "F"	DIM. "G"
14	20.0 [.79]	14.4 [.57]	8.8 [.35]	4.8 [.19]	9.2 [.36]	8.255 [.3250]	19.0 [.75]
26	24.8 [.98]	19.2 [.76]	13.6 [.54]	9.6 [.38]	14.0 [.55]	15.875 [.6250]	23.8 [.94]

CONNECTOR DIMENSION TABLE
TABLE 1

UL FILE NO: E68080

NOTES

1. MATERIAL:
   INSULATION: 14 PIN: PPS, 26 PIN: LCP
   COLOR: BLACK, UL94V-0

   CONTACT: COPPER ALLOY
   PLATING:
   SEE ORDERING INFO SHEET 2

   SHROUD & LATCH HOOK: STEEL
   PLATING: NICKEL

   GROUND LOCK: COPPER ALLOY
   PLATING: SEMI-BRIGHT TIN OVER NICKEL

   LOCK SCREW: STEEL
   PLATING: NICKEL

   ALIGNMENT PLATE: PPS
   COLOR: BLACK, UL94V-0

   EARTH PLATE: COPPER ALLOY
   PLATING: TIN

   HEX NUT: BRASS

2. MARKING: 3M LOGO AND PART NUMBER.

3. ELECTRICAL:
   CURRENT RATING: 0.5 A
   INSULATION RESISTANCE: 500 MΩ MIN AT 250 V_{DC}
   WITHSTANDING VOLTAGE: 350 V_{AC} FOR 1 MINUTE

4. ENVIRONMENTAL:
   TEMPERATURE RATING:
   -40°C TO +70°C
   PROCESS RATING:
   REFLOW: PREHEAT 150° TO 180°C,
   90 TO 120 SECONDS
   SOLDERING: OVER 220°C,
   30 TO 60 SECONDS, PEAK TEMPERATURE
   IS 250°C MAX.
   SOLDER IRON: 380°C MAX, 3 SECONDS MAX.

5. IN THE EVENT OF CONFLICT BETWEEN THIS DATA AND THAT CONTAINED IN THE PRODUCT SPECIFICATION, THE PRODUCT SPECIFICATION TAKES PRECEDENT.

6. FOR VARIOUS PANEL THICKNESS JACKSOCKETS REFER TO TS-0142.

7. SEE REGULATORY INFORMATION APPENDIX (RIA) IN THE "RoHS COMPLIANCE" SECTION OF WWW.3MCONNECTOR.COM FOR COMPLIANCE INFORMATION.

DIMENSIONS ARE IN MM.
SECONDARY ARE IN [INCHES]
AND ARE FOR REFERENCE ONLY

REV	ECO	ISSUE DATE AND DESCRIPTION	DRFT	CHKD
F	40541	MAY 01,2012 ADD 'PL' PLATING SPEC	ARM	DFC
E	30752	JAN 05,2011 REVISED AND REDRAWN	JNC	SC

DESIGN REFERENCE | NEXT ASSEMBLY | DISTRIBUTION CODES

DRFT: CASTIGLIONE | DATE: JAN 07,2011 | MFG | DATE

CHKD | DATE | APPVL: D. CRONCH | DATE: MAR 30,2011

DIVISION: Interconnect Solutions | DIVISION CODE: ISD

DO NOT SCALE DRAWING | SCALE 6/1

TOLERANCES EXCEPT AS NOTED
INCHES
.0 ±
.00 ±.006
.000 ±.006
.0000 ±.005
MILLIMETERS
0 ±
.0 ±.15
.00 ±.15
.000 ±.13
ANGLES ±

THIRD ANGLE PROJECTION

INTERPRET PER ASME Y14.5 - 1994

MAX SURFACE ROUGHNESS ☐ ALL SURFACES ☐ MARKED ONLY

3M Center St. Paul, MN 55144
© 3M COPYRIGHT 2012
This document and the information it contains are 3M property and may not be reproduced or further distributed without 3M permission, or used or disclosed other than for 3M authorized purposes. All rights reserved.

TITLE: 3M SHRUNK DELTA RIBBON (SDR) CONN. 122XX-82X0-00XX

CAGE NUMBER | SIZE: D | DRAWING NO.: 78-5100-2125-2 | REV.: F

MODEL: 12200 | DET LISTS ☐ YES ☒ NO | SHT 1 OF 2

78-5100-2125-2 (DRAWING NUMBER) F (REVISION)

3M™ Shrunk Delta Ribbon (SDR) Connectors, 122 Series

.80 mm Surface Mount, Right Angle Receptacle, Shielded

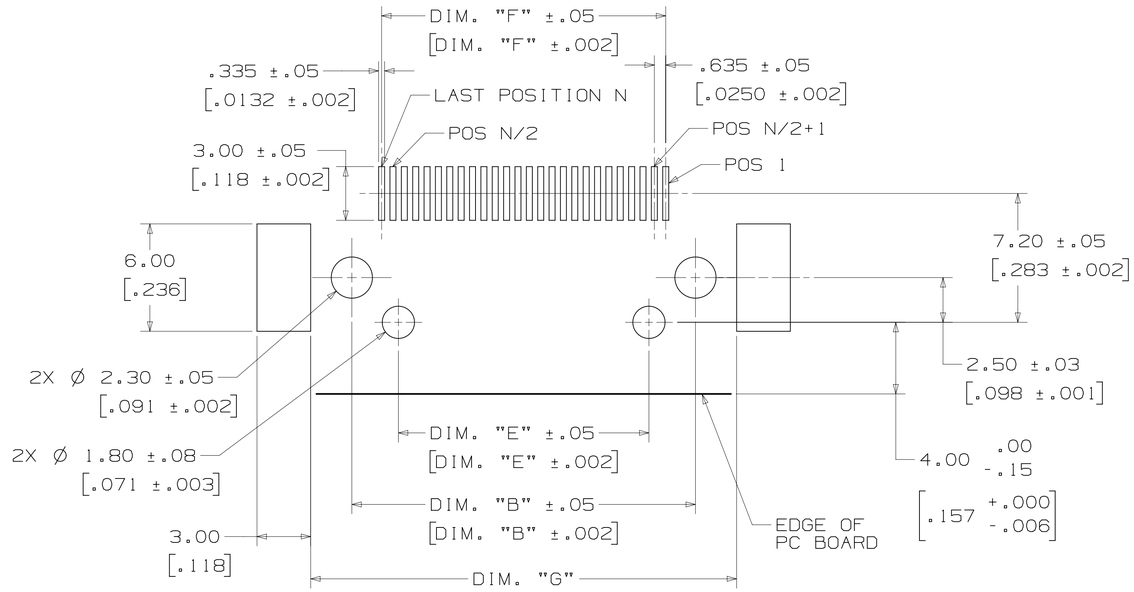

RECOMMENDED PC BOARD LAYOUT
(MOUNT SIDE VIEW)
N = TOTAL NUMBER OF POSITIONS
SCALE 6X

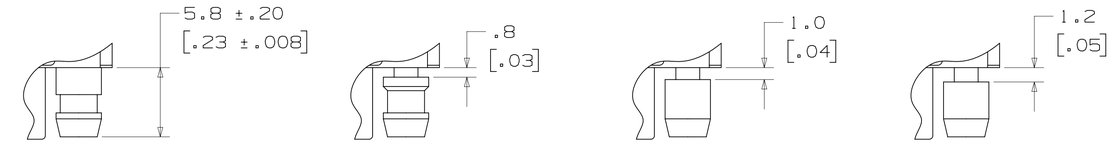

12600-S-00 SEE NOTE | 12600-S-08 | 12600-S-10 | 12600-S-12

JACKSOCKET
M2 X 0.4

NOTE: JACKSOCKET 12600-S-00 COMES FACTORY INSTALLED IN CONNECTOR 122XX-8250-00FR. IT IS FIXED WITH THREAD LOCKING ADHESIVE AND CANNOT BE REMOVED.

PANEL THICKNESS	CONNECTOR	JACKSOCKET
NO PANEL	122XX-8250-00XX	FACTORY INSTALLED (SEE NOTE)
0.8±0.1MM	122XX-8200-00XX	12600-S-08 (ORDER SEPARATELY)
1.0±0.1MM	122XX-8200-00XX	12600-S-10 (ORDER SEPARATELY)
1.2±0.1MM	122XX-8200-00XX	12600-S-12 (ORDER SEPARATELY)

SELECTION TABLE FOR PANEL MOUNTING
TABLE 3

ORDERING INFORMATION:

122XX-82X0-00XX

CONTACT QUANTITY (SEE TABLE 1)

PLATING OPTION:

FR = 50-100μ" NICKEL UNDERPLATE
30μ" GOLD MIN. WIPE AREA
FLASH GOLD TERM AREA (TAIL)

PL = 50-100μ" NICKEL UNDERPLATE
8μ" GOLD MIN. WIPE AREA
FLASH GOLD TERM AREA (TAIL)

SCREW LOCK OPTION: (SEE TABLE 3)
0=NONE
(RIA E1 & C1 APPLY)
5=WITH12600-S-00 NON-REMOVABLE SCREW LOCK
(RIA E5 & C3 APPLY)

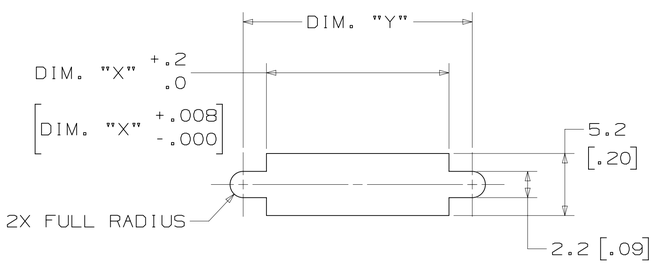

RECOMMENDED PANEL CUT-OUT
(MAXIMUM PANEL THICKNESS 1.2MM)

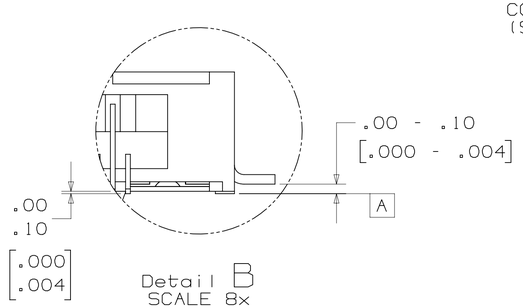

Detail B
SCALE 8x

POSITION	DIM. "X"	DIM. "Y"
14	10.5 [.41]	14.4 [.57]
26	15.3 [.60]	19.2 [.76]

RECOMMENDED PANEL CUT-OUT DIMENSION TABLE
TABLE 2

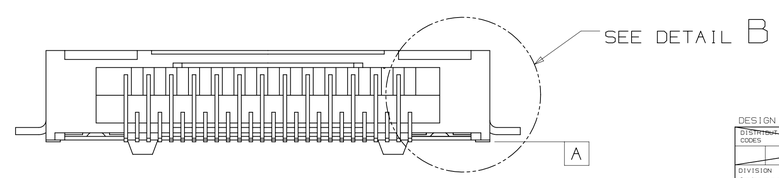

VIEW A-A
SCALE 6X

THE DIMENSION OF PIN TAILS LOWER SURFACE TO DATUM "A" SURFACE: 0.00 TO 0.10 [.000 TO .004].
NOTE: THE CONNECTOR SHOULD BE ON FLAT FIXTURE SURFACE WHEN THE DIMENSIONS ARE MEASURED.

REV	ECO	ISSUE DATE AND DESCRIPTION	DRFT	CHKD
F	40541	MAY 01,2012 ADD 'PL' PLATING SPEC	ARM	DFC
E	30752	JAN 05,2011 REVISED AND REDRAWN	JNC	SC

DESIGN REFERENCE | NEXT ASSEMBLY | DISTRIBUTION CODES
DRFT CASTIGLIONE | DATE JAN 07,2011 | MFG | DATE
CHKD | DATE | APPVL D. CRONCH | DATE MAR 30,2011
DIVISION Interconnect Solutions | DIVISION CODE 15D
DO NOT SCALE DRAWING | SCALE 4 1
TOLERANCES EXCEPT AS NOTED
INCHES: .0 ± ; .00 ±.006 ; .000 ±.006 ; .0000 ±.005
MILLIMETERS: 0 ± ; .0 ±.15 ; .00 ±.15 ; .000 ±.13
THIRD ANGLE PROJECTION
INTERPRET PER ASME Y14.5 - 1994
MAX SURFACE ROUGHNESS ☐ ALL SURFACES ☐ MARKED ONLY
ANGLES ±

© 3M COPYRIGHT 2012
This document and the information it contains are 3M property and may not be reproduced or further distributed without 3M permission, or used or disclosed other than for 3M authorized purposes. All rights reserved.

3M Center, St. Paul, MN 55144

TITLE: 3M SHRUNK DELTA RIBBON (SDR) CONN. 122XX-82X0-00XX

CAGE NUMBER | SIZE D | DRAWING NO. 78-5100-2125-2 | REV. F
MODEL 12200 | DET LISTS ☐ YES ☒ NO | SHT 2 OF 2

78-5100-2125-2 DRAWING NUMBER | F REVISION

Компания «ЭлектроПласт» предлагает заключение долгосрочных отношений при поставках импортных электронных компонентов на взаимовыгодных условиях!

Наши преимущества:

- Оперативные поставки широкого спектра электронных компонентов отечественного и импортного производства напрямую от производителей и с крупнейших мировых складов;
- Поставка более 17-ти миллионов наименований электронных компонентов;
- Поставка сложных, дефицитных, либо снятых с производства позиций;
- Оперативные сроки поставки под заказ (от 5 рабочих дней);
- Экспресс доставка в любую точку России;
- Техническая поддержка проекта, помощь в подборе аналогов, поставка прототипов;
- Система менеджмента качества сертифицирована по Международному стандарту ISO 9001;
- Лицензия ФСБ на осуществление работ с использованием сведений, составляющих государственную тайну;
- Поставка специализированных компонентов (Xilinx, Altera, Analog Devices, Intersil, Interpoint, Microsemi, Aeroflex, Peregrine, Syfer, Eurofarad, Texas Instrument, Miteq, Cobham, E2V, MA-COM, Hittite, Mini-Circuits,General Dynamics и др.);

Помимо этого, одним из направлений компании «ЭлектроПласт» является направление «Источники питания». Мы предлагаем Вам помощь Конструкторского отдела:

- Подбор оптимального решения, техническое обоснование при выборе компонента;
- Подбор аналогов;
- Консультации по применению компонента;
- Поставка образцов и прототипов;
- Техническая поддержка проекта;
- Защита от снятия компонента с производства.

Как с нами связаться

Телефон: 8 (812) 309 58 32 (многоканальный)
Факс: 8 (812) 320-02-42
Электронная почта: org@eplast1.ru
Адрес: 198099, г. Санкт-Петербург, ул. Калинина, дом 2, корпус 4, литера А.