WITH ATTACHMENT

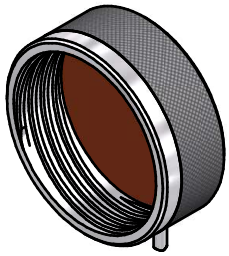

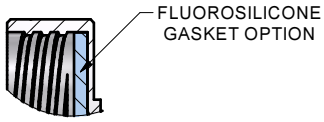

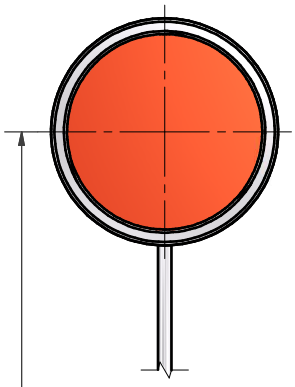

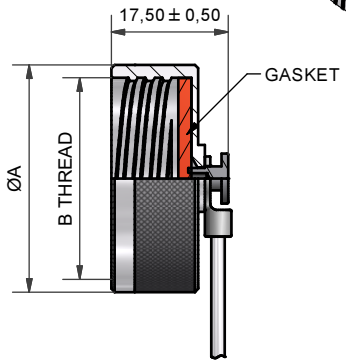

ATTACHMENT OPTIONS:

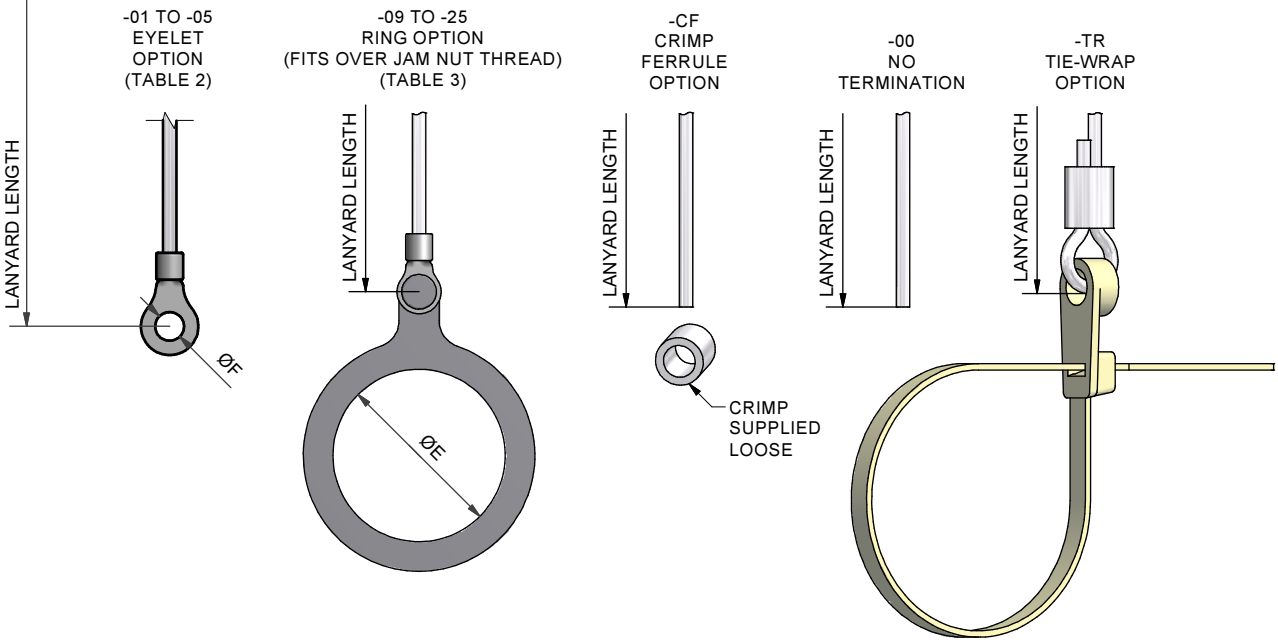

OMIT FOR NO ATTACHMENT
(SEE SHEET 2)

100P160-17-1-C-WR4-17

- SERIES
- INSERT 'F' FOR FLUOROSILICONE GASKET OMIT FOR STANDARD SILICONE GASKET
- SHELL SIZE (TABLE 1)
- MATERIAL (TABLE 5)
- FINISH (TABLE 6)
- LANYARD TYPE (TABLE 4)
- LANYARD LENGTH (IN INCHES) +1,0"/-0" TOLERANCE
- ATTACHMENT (SEE ABOVE)

DRAWN	W.RUST	DATE 12/02/2014	3RD ANGLE PROJECTION NOT TO SCALE	POLAMCO WESTON LOCK LOWER BRISTOL ROAD BATH BA2 1EP	PAGE 1 OF 4	UNLESS OTHERWISE SPECIFIED ALL DIMENSIONS IN MILLIMETRES
SALES APPR						
DESIGN APPR			THIS DRAWING IS COPYRIGHTANDTHE PROPERTY OF POLAMCO LTD IT MUST NOT BE COPIED, USED FOR MANUFACTURE OR OTHERWISE DISCLOSED WITHOUT PRIOR WRITTEN CONSENT OF THE COMPANY.	ASSY USED ON: MIL-DTL-38999 SERIES III		MATERIAL
QUAL APPR				TITLE: RECEPTACLE PROTECTION CAP		SEE TABLE 5
ISSUE 9	REV 3	DCR 3969				NCAGE CODE U5792
WEIGHT ---		GENERAL TOL LINEAR +/-0.1MM ANGULAR +/- 1°		PART NUMBER: 100P160 SERIES		DRAWING NO: P10523

TABLE 1

SHELL SIZE	ØA MAX	B THREAD
09	21,0	0.625-0.1P-0.3L-TS
11	24,5	0.750-0.1P-0.3L-TS
13	28,0	0.875-0.1P-0.3L-TS
15	30,0	1.000-0.1P-0.3L-TS
17	34,0	1.1875-0.1P-0.3L-TS
19	37,0	1.250-0.1P-0.3L-TS
21	40,0	1.375-0.1P-0.3L-TS
23	43,0	1.500-0.1P-0.3L-TS
25	47,0	1.625-0.1P-0.3L-TS

TABLE 2

EYELET REF.	ØF
01	3,2
02	3,7
03	4,3
04	5,3
05	6,4

TABLE 3

RING REF.	ØE MAX
09	18,0
11	21,4
13	25,8
15	28,8
17	32,0
19	35,0
21	38,3
23	41,7
25	44,6

TABLE 4

CODE	LANYARD TYPE
WR	NYLON COVERED (CLEAR) STAINLESS STEEL WIRE ROPE
TC	TEFLON COVERED (CLEAR) STAINLESS STEEL WIRE ROPE
WG	TEFLON COVERED (OLIVE DRAB) STAINLESS STEEL WIRE ROPE
WB	TEFLON COVERED (BLACK) STAINLESS STEEL WIRE ROPE
WRB	PVC COVERED (BLACK) STAINLESS STEEL WIRE ROPE
LC	LINK CHAIN
BK	BLACK CORD
VGB	1,5mm BLACK POLYESTER CORD EQV. TO DIN83330-E1,5
B	BEAD CHAIN
R	OLIVE DRAB POLYESTER CORD
NB	OLIVE DRAB NYLON CORD
NK	BLACK NYLON CORD

TABLE 5

CODE	MATERIAL	GASKET MATERIAL
1	ALUMINIUM	SILICONE
2	NICKEL ALUMINIUM BRONZE	SILICONE
4	STAINLESS STEEL	VITON
7	BLACK ACETAL	SILICONE
74	COMPOSITE	SILICONE

LIST NOT EXHAUSTIVE, SEE MATERIAL TABLE FOR OTHER OPTIONS

TABLE 6

PLATING CODE	PLATING DESCRIPTION	ROHS COMPLIANT	ENVIRONMENT PROTECTION/ CONDUCTIVITY
B	CADMIUM, OLIVE DRAB (5-10 MICRONS) QQ-P-416, TYPE II, CLASS 3 OVER ELECTROLESS NICKEL	YES (SUBJECT TO EXEMPTION)	CONDUCTIVE 500 HRS SALT SPRAY. EXEMPTION APPLICABLE FOR AEROSPACE / MILITARY APPLICATIONS. SEE ROHS WEBSITES FOR MORE INFORMATION.
C	ELECTROLESS NICKEL, AMS-C-26074, CLASS 4, GRADE B	YES	CONDUCTIVE
J	PASSIVATE, PER QQ-P-35 OR MI-S-5002	YES	ROHS COMPLIANT
U	UNPLATED CLEAN FINISH NOT SHOT BLASTED	YES	CONDUCTIVE
Z	SHOT BLAST FOR NON-REFLECTIVE FINISH	YES	CONDUCTIVE
ZB	ZINC COBALT (5-10 MICRONS) OVER ELECTROLESS NICKEL (2,5-7,5 MICRONS) WITH A OLIVE DRAB CHROMATE CONVERSION	YES	CONDUCTIVE 350 HRS SALT SPRAY
ZN	ZINC NICKEL BLACK PASSIVATE (5-12 MICRONS) OVER ELECTROLESS NICKEL (8-12 MICRONS), ASTM B 841 CLASS 1	YES (SUBJECT TO TESTING)	ROHS COMPLIANT (SUBJECT TO TESTING)

LIST NOT EXHAUSTIVE, SEE PLATING TABLE FOR OTHER OPTIONS

WITHOUT ATTACHMENT

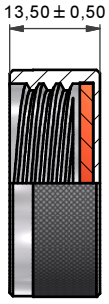

100P160-17-1-C
NO ATTACHMENT VERSION

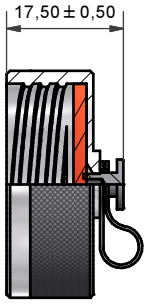

100P160-17-1-C-EO
EYELET ONLY VERSION
(NO LANYARD)

DRAWN	W.RUST	DATE 12/02/2014	3RD ANGLE PROJECTION NOT TO SCALE	POLAMCO WESTON LOCK LOWER BRISTOL ROAD BATH BA2 1EP	PAGE 2 OF 4	UNLESS OTHERWISE SPECIFIED ALL DIMENSIONS IN MILLIMETRES
SALES APPR						
DESIGN APPR			THIS DRAWING IS COPYRIGHTANDTHE PROPERTY OF POLAMCO LTD IT MUST NOT BE COPIED, USED FOR MANUFACTURE OR OTHERWISE DISCLOSED WITHOUT PRIOR WRITTEN CONSENT OF THE COMPANY.	ASSY USED ON: MIL-DTL-38999 SERIES III		MATERIAL
QUAL APPR				TITLE: RECEPTACLE PROTECTION CAP		SEE TABLE 5
ISSUE 9	REV 3	DCR 3969				NCAGE CODE U5792
WEIGHT ---		GENERAL TOL LINEAR +/-0.1MM ANGULAR +/- 1°		PART NUMBER: 100P160 SERIES		DRAWING NO: P10523

OPTIONAL GASKET:

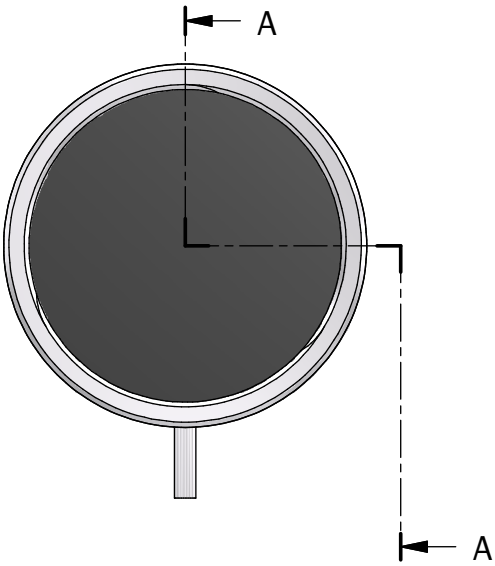

A-A

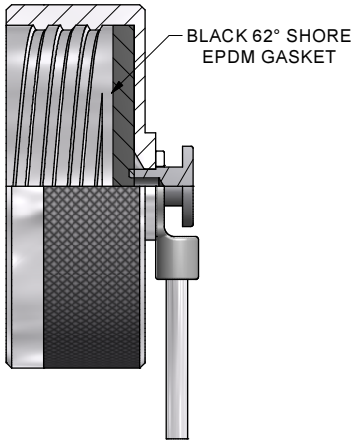

OMIT FOR NO ATTACHMENT
(SEE SHEET 2)

100P160-17-1-C-WR4-17-EPDM

- SERIES
- SHELL SIZE (TABLE 1)
- MATERIAL (TABLE 5)
- FINISH (TABLE 6)
- LANYARD TYPE (TABLE 4)
- LANYARD LENGTH (IN INCHES)
  +1,0"/-0" TOLERANCE
- ATTACHMENT (SEE ABOVE)
- EPDM GASKET

DRAWN	W.RUST	DATE 12/02/2014	3RD ANGLE PROJECTION NOT TO SCALE	POLAMCO WESTON LOCK LOWER BRISTOL ROAD BATH BA2 1EP	PAGE 3 OF 4	UNLESS OTHERWISE SPECIFIED ALL DIMENSIONS IN MILLIMETRES
SALES APPR						
DESIGN APPR			THIS DRAWING IS COPYRIGHTANDTHE PROPERTY OF POLAMCO LTD IT MUST NOT BE COPIED, USED FOR MANUFACTURE OR OTHERWISE DISCLOSED WITHOUT PRIOR WRITTEN CONSENT OF THE COMPANY.	ASSY USED ON: MIL-DTL-38999 SERIES III		MATERIAL
QUAL APPR				TITLE: RECEPTACLE PROTECTION CAP		SEE TABLE 5
ISSUE 9	REV 3	DCR 3969				NCAGE CODE U5792
WEIGHT ---		GENERAL TOL LINEAR +/-0.1MM ANGULAR +/- 1°		PART NUMBER: 100P160 SERIES		DRAWING NO: P10523

WITH PLATED ACCESSORIES

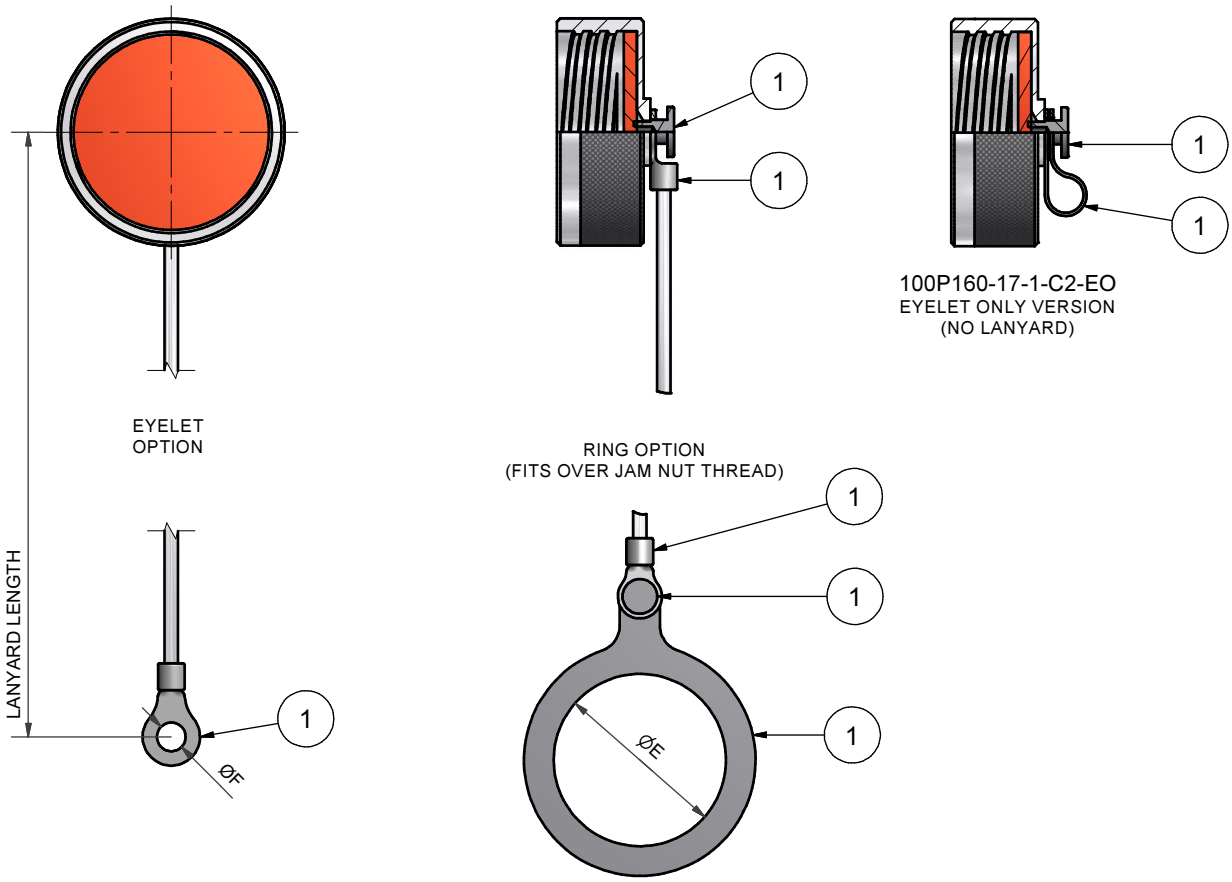

100P160-17-1-C2-WR4-17

- SERIES
- SHELL SIZE (TABLE 1)
- MATERIAL (TABLE 5)
- FINISH (TABLE 6)
- PLATED EYELETS, RIVETS AND RINGS - AVAILABLE FOR PLATING CODES B, C, ZB, ZN (SEE NOTE)
- LANYARD TYPE (TABLE 4)
- LANYARD LENGTH (IN INCHES) +1,0"/-0" TOLERANCE
- ATTACHMENT (SEE ABOVE)

NOTE:
1. ALL COMPONENTS INDICATED TO BE PLATED THE SAME AS CAP WHEN CODE "2" IS INSERTED IN THE PART NUMBER

DRAWN	W.RUST	DATE 12/02/2014	3RD ANGLE PROJECTION NOT TO SCALE	POLAMCO WESTON LOCK LOWER BRISTOL ROAD BATH BA2 1EP	PAGE 4 OF 4	UNLESS OTHERWISE SPECIFIED ALL DIMENSIONS IN MILLIMETRES
SALES APPR						
DESIGN APPR			THIS DRAWING IS COPYRIGHTANDTHE PROPERTY OF POLAMCO LTD IT MUST NOT BE COPIED, USED FOR MANUFACTURE OR OTHERWISE DISCLOSED WITHOUT PRIOR WRITTEN CONSENT OF THE COMPANY.	ASSY USED ON: MIL-DTL-38999 SERIES III		MATERIAL
QUAL APPR				TITLE: RECEPTACLE PROTECTION CAP		SEE TABLE 5
ISSUE 9	REV 3	DCR 3969				NCAGE CODE U5792
WEIGHT ---		GENERAL TOL LINEAR +/-0.1MM ANGULAR +/- 1°		PART NUMBER: 100P160 SERIES		DRAWING NO: P10523

Компания «ЭлектроПласт» предлагает заключение долгосрочных отношений при поставках импортных электронных компонентов на взаимовыгодных условиях!

Наши преимущества:

- Оперативные поставки широкого спектра электронных компонентов отечественного и импортного производства напрямую от производителей и с крупнейших мировых складов;
- Поставка более 17-ти миллионов наименований электронных компонентов;
- Поставка сложных, дефицитных, либо снятых с производства позиций;
- Оперативные сроки поставки под заказ (от 5 рабочих дней);
- Экспресс доставка в любую точку России;
- Техническая поддержка проекта, помощь в подборе аналогов, поставка прототипов;
- Система менеджмента качества сертифицирована по Международному стандарту ISO 9001;
- Лицензия ФСБ на осуществление работ с использованием сведений, составляющих государственную тайну;
- Поставка специализированных компонентов (Xilinx, Altera, Analog Devices, Intersil, Interpoint, Microsemi, Aeroflex, Peregrine, Syfer, Eurofarad, Texas Instrument, Miteq, Cobham, E2V, MA-COM, Hittite, Mini-Circuits,General Dynamics и др.);

Помимо этого, одним из направлений компании «ЭлектроПласт» является направление «Источники питания». Мы предлагаем Вам помощь Конструкторского отдела:

- Подбор оптимального решения, техническое обоснование при выборе компонента;
- Подбор аналогов;
- Консультации по применению компонента;
- Поставка образцов и прототипов;
- Техническая поддержка проекта;
- Защита от снятия компонента с производства.

Как с нами связаться

Телефон: 8 (812) 309 58 32 (многоканальный)
Факс: 8 (812) 320-02-42
Электронная почта: org@eplast1.ru
Адрес: 198099, г. Санкт-Петербург, ул. Калинина, дом 2, корпус 4, литера А.