HSMx-A43x-xxxxx
Surface Mount LED Indicator

Data Sheet

Lead (Pb) Free
RoHS 6 fully compliant

Description

The Power PLCC-4 SMT LED with Lens are high-performance PLCC-4 package size SMT LEDs targeted mainly in Automotive & Electronics Signs and Signals (ESS) markets. These top-mount single-chip packages with focused radiation offer high brightness in beam direction and are excellent for interior automotive, indoor and outdoor sign and industrial applications. With additional lens in 30° variants, these products are especially fitting to applications for traffic lights, CHMSL and displays.

The PLCC-4 package family is able to dissipate heat better compared to the PLCC-2 packages. In proportion to this increase in driving current, this family of LEDs is able to produce higher light output compared to the conventional PLCC-2 SMT LEDs.

As an extension of the standard flat top PLCC-4 SMT LEDs, the Power PLCC-4 with Lens device is able to provide focused beams within narrow viewing angles (30°) meeting the market's requirements for focused radiation and high brightness in beam directions.

The Power PLCC-4 SMT LED with 30° is ideal for panel, push button, or general backlighting in automotive interior & exterior, sign, office equipment, industrial equipment and home appliances applications. This package design coupled with careful selection of component materials allow the Power PLCC-4 SMT LED with Lens to perform with higher reliability in a larger temperature range -40°C to 100°C. This high reliability feature is crucial to allow the Power PLCC-4 SMT LED with Lens to do well in harsh environments such as its target Automotive & ESS markets. The Power PLCC4 SMT LED with Lens package is also designed to be compatible with both IR-solder re-flow and through-the-wave soldering.

Features

- Industry Standard PLCC-4
- High reliability LED package
- High brightness using AlInGaP and InGaN dice technologies
- High optical efficiency
- Narrow Viewing angle at 30°
- Available in 8mm carrier tape on 7-inch reel
- Compatible with both IR and TTW soldering process

Applications

Interior automotive

- Instrument panel backlighting
- Central console backlighting
- Cabin backlighting
- Navigation and audio system
- Dome lighting
- Push button backlighting

Exterior automotive

- Turn signals
- CHMSL
- Rear Combination Lamp
- Side repeaters

Electronic signs and signals

- Interior and exterior full color sign
- Variable message sign
- Garden lighting

Office automation, home appliances, industrial equipment

- Front panel backlighting
- Push button backlighting
- Display backlighting

CAUTION: *HSMN, HSMM-A43x-xxxxx LEDs are Class 2 ESD sensitive. Please observe appropriate precautions during handling and processing. Refer to Avago Application Note AN-1142 for additional details.*

The new Avago Technologies Power PLCC-4 SMT LED with 30° Lens will carry the part number HSMx- A43xxxxxx. The high brightness AlInGaP and InGaN dice technologies utilized will provide the product brightness that meets the Automotive and ESS markets requirements. The Lens package will complement and complete the existing AlInGap & InGaN color standard Power-PLCC-4 LED that Avago Technologies offers, providing customers an extra Lens option from one supplier.

To facilitate easy pick and place assembly, the LEDs are packed in EIA-compliant tape and reel. Every reel will be shipped in single intensity and color bin (except for red color), to provide close uniformity

Package Dimensions

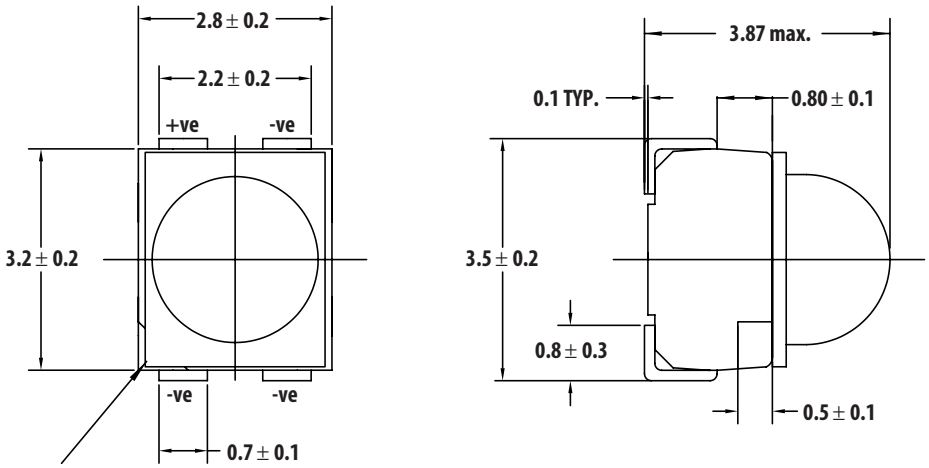

Package marking

Note: All dimensions in mm
Electrical connection between all cathodes is recommended

Device Selection Guide

Color	Part Number	Min. I_V (mcd)	Typ. I_V (mcd)	Max. I_V (mcd)	Test Current (mA)	Dice Technology
Red	HSMC-A430-W50M1	1125	2300	3550	50	AlInGaP
	HSMC-A431-X90M1	2240	4000	7150	50	AlInGaP
	HSMC-A431-Y70M1	3550	-	7150	50	AlInGaP
	HSMC-A431-Y80M1	3550	-	9000	50	AlInGaP
Red Orange	HSMJ-A430-W50M1	1125	2300	3550	50	AlInGaP
	HSMJ-A431-X90M1	2240	4500	7150	50	AlInGaP
	HSMJ-A431-X90M1	2240	-	7150	50	AlInGaP
	HSMJ-A431-Y70M1	3550	-	7150	50	AlInGaP
Orange	HSML-A431-X90M1	2240	4500	7150	50	AlInGaP
Amber	HSMA-A430-W90M1	1400	3000	4500	50	AlInGaP
	HSMA-A431-Y00M1	2850	5000	-	50	AlInGaP
	HSMA-A431-X90M1	2240	4700	7150	50	AlInGaP
	HSMA-A431-13NM1	7150	-	14000	50	AlInGaP
	HSMA-A431-Z50M1	4500	-	14000	50	AlInGaP
	HSMA-A431-Z5WM1	4500	-	14000	50	AlInGaP
Green	HSMM-A430-X90M2	2240		7150	30	InGaN
	HSMM-A430-Y3YM2	2850	-	5600	30	InGaN
	HSMM-A430-Y7YM2	3550	-	7150	30	InGaN
Blue	HSMN-A430-V50M2	715		2240	30	InGaN
	HSMN-A430-V7YM2	900	-	1800	30	InGaN

Notes:
1. The luminous intensity I_V, is measured at the mechanical axis of the lamp package. The actual peak of the spatial radiation pattern may not be aligned with this axis.
2. Iv tolerance ±12%

Part Numbering System

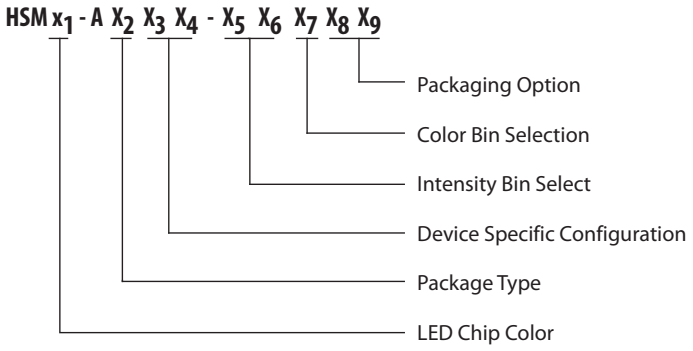

Absolute Maximum Ratings (T_A=25°C)

Parameters	HSMC/A	HSMV	HSMK/M/N
DC Forward Current [1]	70 mA	70 mA	30 mA
Peak Forward Current [2]	200 mA	200 mA	90 mA
Power Dissipation	180 mW	240 mW	114 mW
Reverse Voltage	5V	5V	4V
Junction Temperature	110 °C		
Operating Temperature	- 40 °C to + 100 °C		
Storage Temperature	- 40 °C to + 100 °C		

Notes:
1. Derate linearly as shown in Figure 4.
2. Duty factor = 10%, Frequency = 1kHz

Optical Characteristics (T_A = 25 °C)

Color	Part Number	Dice Technology	Peak Wavelength λ_{PEAK} (nm) Typical	Dominant Wavelength λ_D[1] (nm) Typical	Viewing Angle $2\theta_{½}$ [2] (Degrees) Typical	Luminous Efficacy η_V [3] (lm/W) Typical
Red	HSMC-A43x	AlInGaP	635	626	30	150
Red Orange	HSMJ-A43x	AlInGaP	621	615	30	240
	HSMV-A430	AlInGaP	623	617	30	263
Orange	HSML-A431	AlInGaP	609	605	30	320
Amber	HSMA-A43x	AlInGaP	592	590	30	480
Green	HSMM-A430	InGaN	518	525	30	500
Blue	HSMN-A43X	InGaN	468	470	30	75
Cyan	HSMK-A43X	InGaN	500	502	30	285

Notes:
1. The dominant wavelength, λ_D, is derived from the CIE Chromaticity Diagram and represents the color of the device.
2. θ½ is the off-axis angle where the luminous intensity is ½ the peak intensity.
3. Radiant intensity, Ie in watts / steradian, may be calculated from the equation Ie = I_V / η_V, where I_V is the luminous intensity in candelas and η_V is the luminous efficacy in lumens / watt.

Electrical Characteristics (T_A = 25 °C)

Part Number	Forward Voltage V_F (Volts)@I_F=50 mA Minimum	Typical	Maximum	Reverse Voltage V_R@100μA Minimum	Reverse Voltage V_R@10μA Minimum
HSMC/J/L/A	1.7	2.2	2.5	5	-
HSMV	1.7	2.8	3.4	5	-

Part Number	Forward Voltage V_F (Volts)@I_F=30 mA Minimum	Typical	Maximum	Reverse Voltage V_R@100μA Minimum	Reverse Voltage V_R@10μA Minimum
HSMK/M/N	2.7	3.9	4.6	-	5

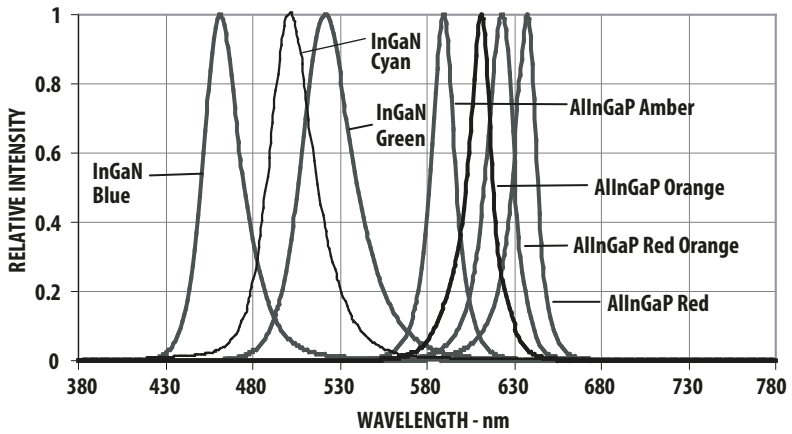

Figure 1. Relative Intensity Vs. Wavelength

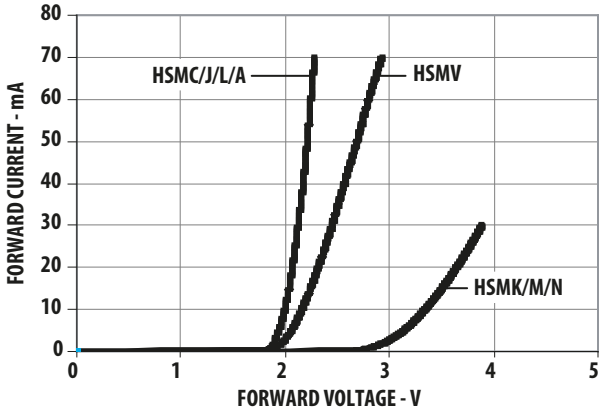

Figure 2. Forward Current Vs. Forward Voltage

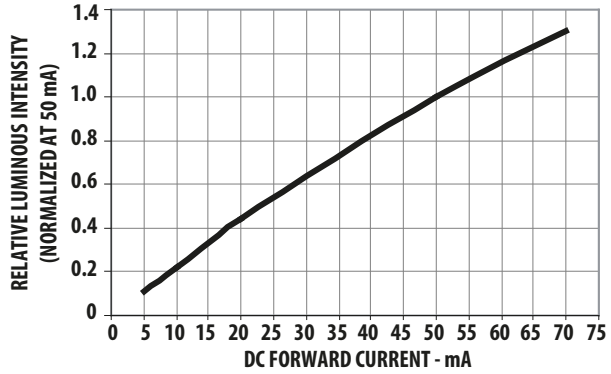

Figure 3a. Relative Intensity Vs. Forward Current (AlInGaP).

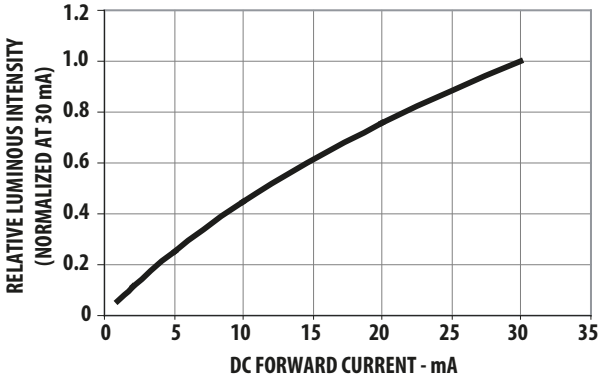

Figure 3b. Relative Intensity Vs. Forward Current (InGaN).

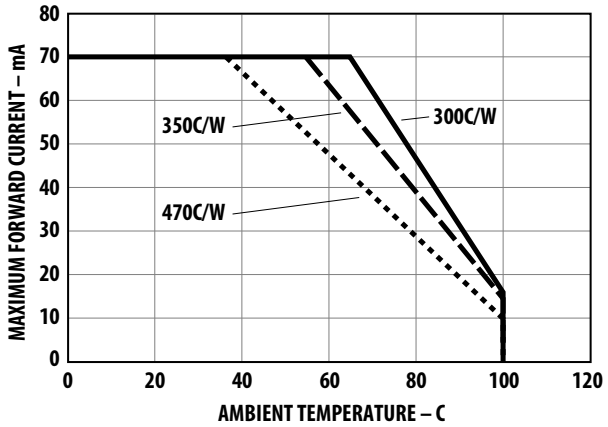

Figure 4a. Maximum Forward Current Vs. Ambient Temperature. Derated Based on $T_J$max= 110°C (AlInGaP)

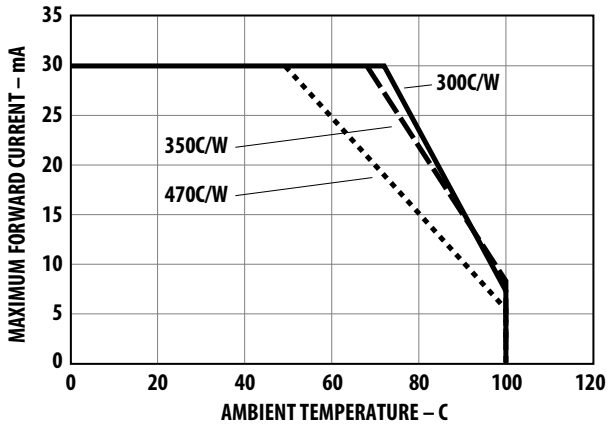

Figure 4b. Maximum Forward Current Vs. Ambient Temperature. Derated Based on $T_J$max= 110°C (InGaN)

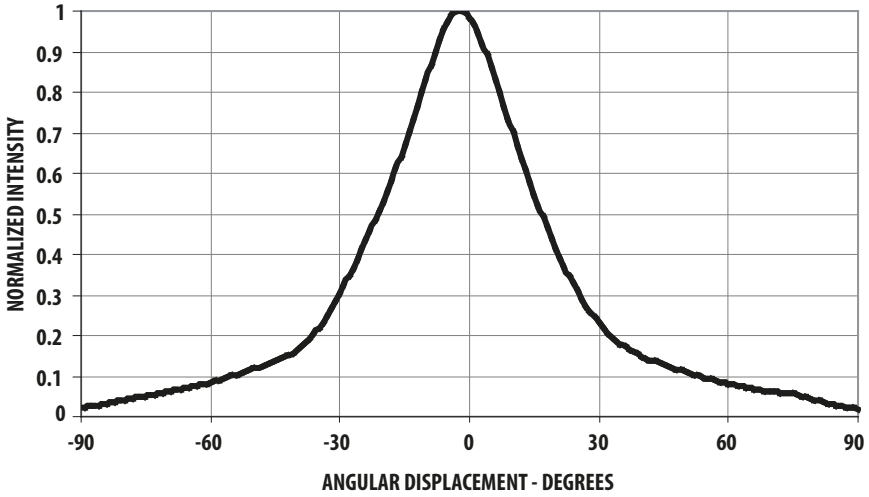

Figure 5. Radiation Pattern

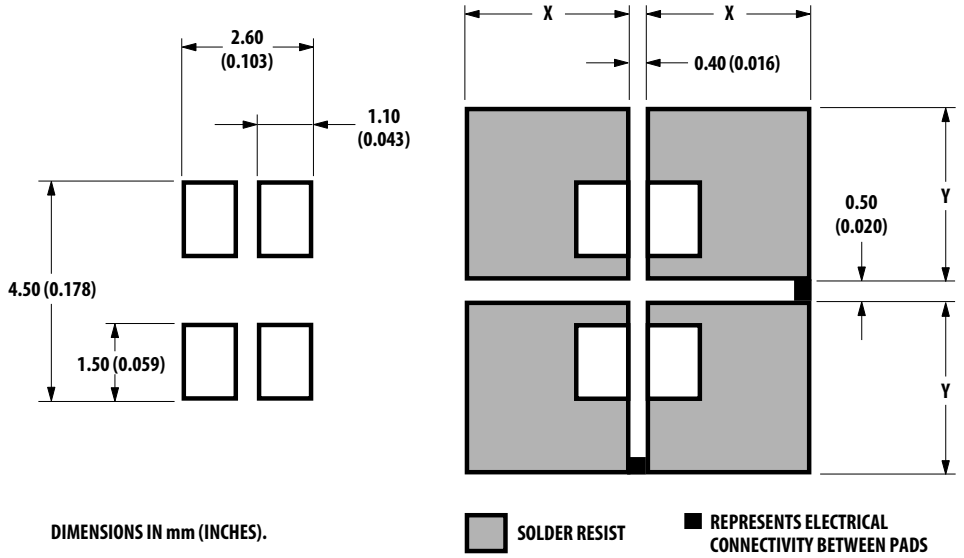

Figure 6a. Recommended Soldering Pad Pattern (IR Reflow).

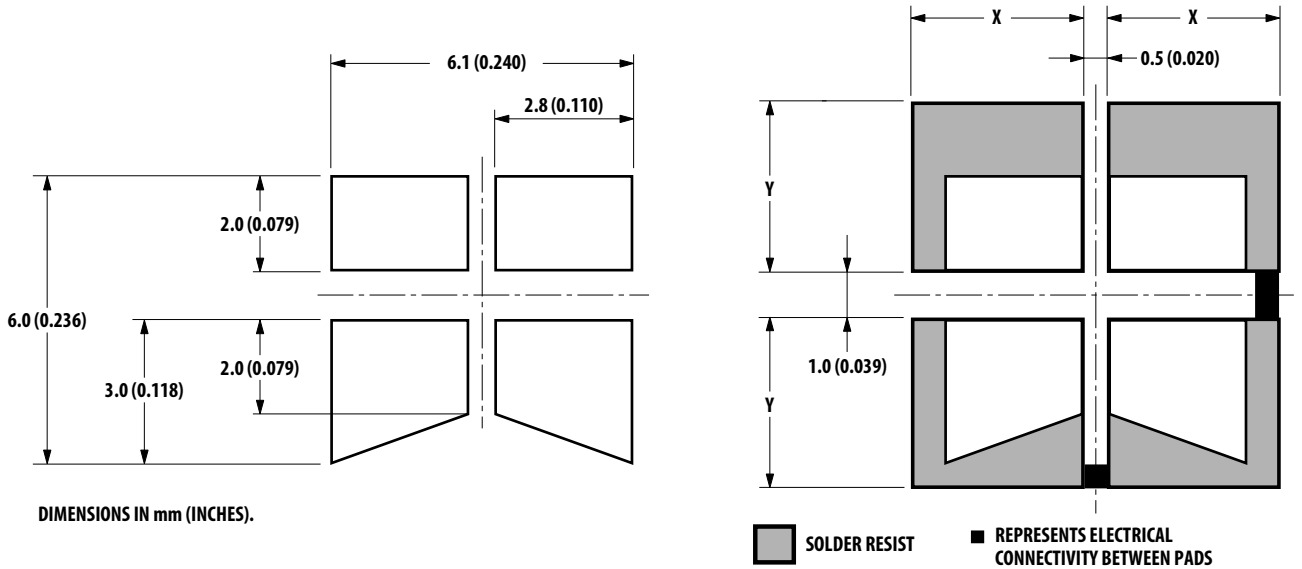

Figure 6b. Recommended Soldering Pad Pattern (TTW).

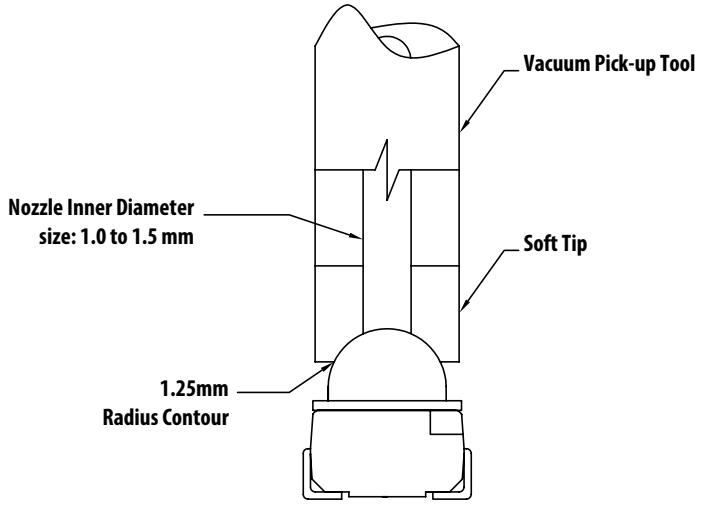

Figure 7. Soft Tip Vacuum Pick-up Tool for Extracting SMT LED Components from Carrier Tape.

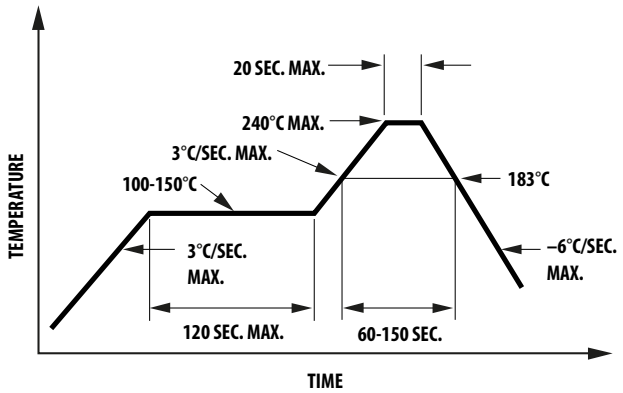

Figure 8a. Recommended SnPb Reflow Soldering Profile

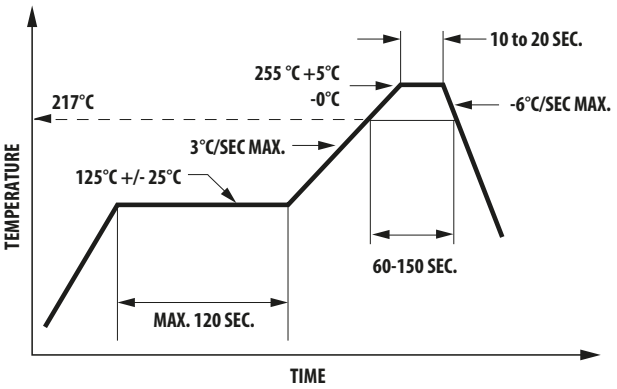

Figure 8b. Recommended Pb-free Reflow Soldering Profile.

Note: For detail information on reflow soldering of Avago surface mount LEDs, do refer to Avago Application Note AN 1060 Surface Mounting SMT LED Indicator Components.

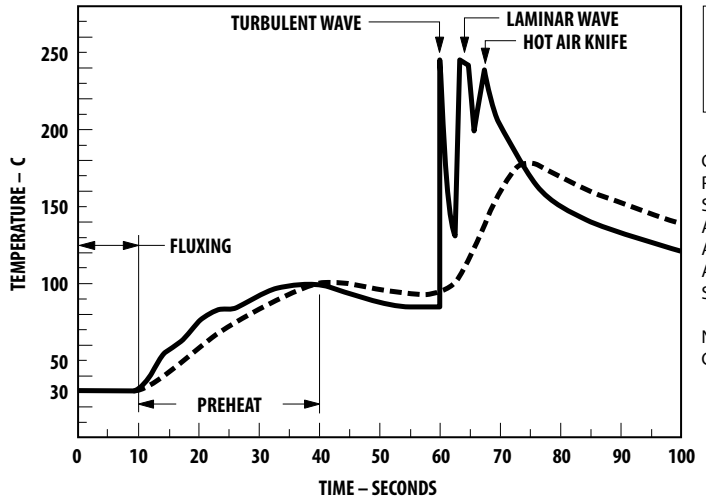

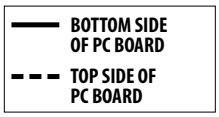

CONVEYOR SPEED = 1.83 M/MIN (6 FT/MIN)
PREHEAT SETTING = 150 C (100 C PCB)
SOLDER WAVE TEMPERATURE = 245 C
AIR KNIFE AIR TEMPERATURE = 390 C
AIR KNIFE DISTANCE = 1.91 mm (0.25 IN.)
AIR KNIFE ANGLE = 40
SOLDER: SN63; FLUX: RMA

NOTE: ALLOW FOR BOARDS TO BE SUFFICIENTLY COOLED BEFORE EXERTING MECHANICAL FORCE.

Figure 9. Recommended Wave Soldering Profile.

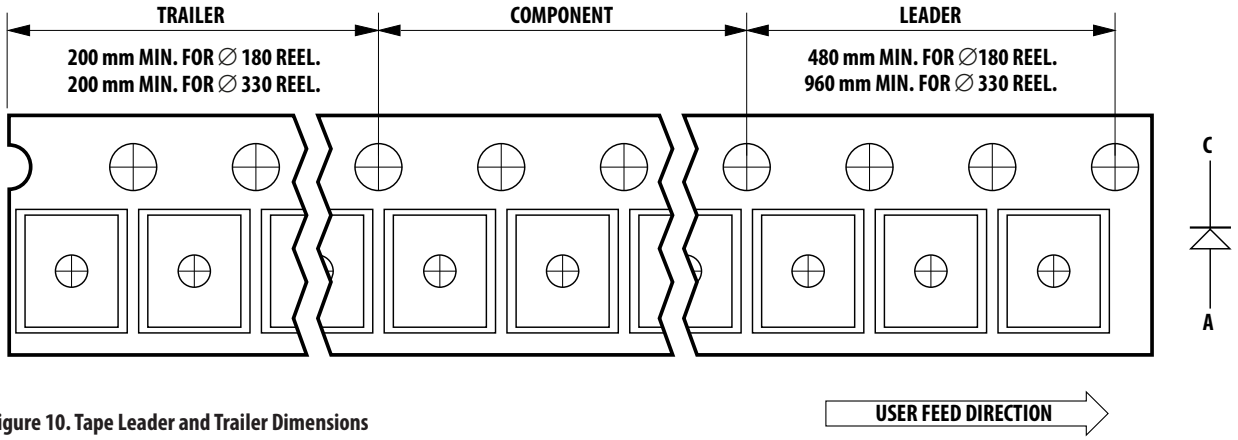

Figure 10. Tape Leader and Trailer Dimensions

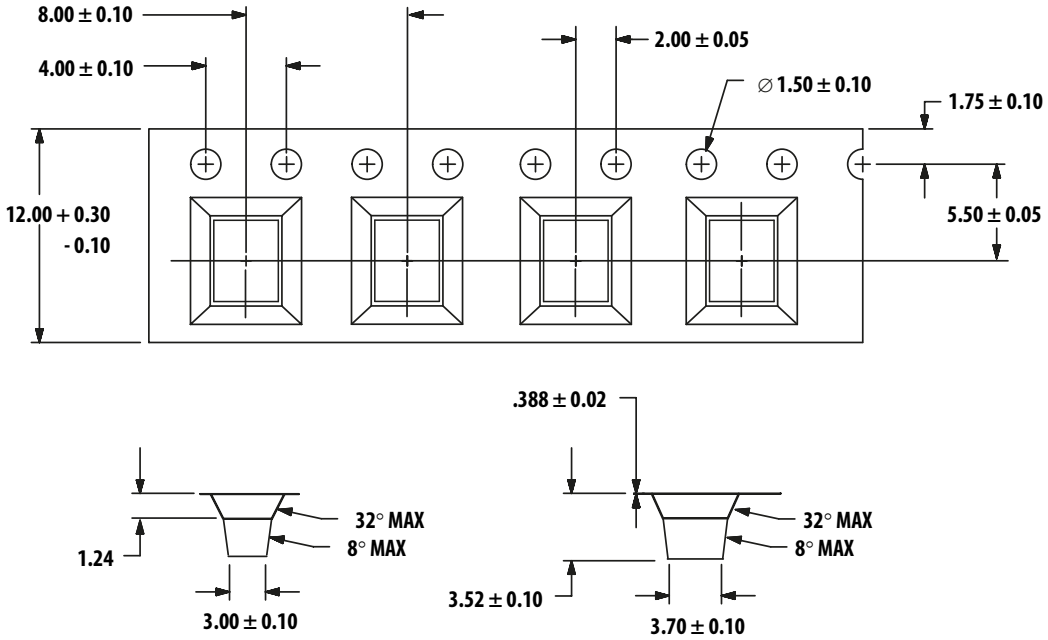

Figure 11. Tape Dimensions

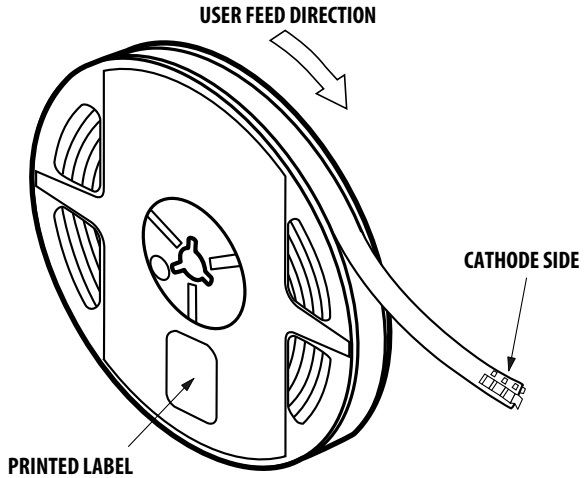

Figure 12. Reeling Orientation.

Moisture Sensitivity

This product is qualified as Moisture Sensitive Level 2a per Jedec J-STD-020. Precautions when handling this moisture sensitive product is important to ensure the reliability of the product. Do refer to Avago Application Note AN5305 Handling of Moisture Sensitive Surface Mount Devices for details.

A. Storage before use

- Unopen moisture barrier bag (MBB) can be stored at <40°C/90%RH for 12 months. If the actual shelf life has exceeded 12 months and the HIC indicates that baking is not required, then it is safe to reflow the LEDs per the original MSL rating.
- It is not recommended to open the MBB prior to assembly (e.g. for IQC).

B. Control after opening the MBB

- The humidity indicator card (HIC) shall be read immediately upon opening of MBB.
- The LEDs must be kept at <30°C / 60%RH at all time and all high temperature related process including soldering, curing or rework need to be completed within 672 hours.

C. Control for unfinished reel

- For any unuse LEDs, they need to be stored in sealed MBB with desiccant or desiccator at <5%RH.

D. Control of assembled boards

- If the PCB soldered with the LEDs is to be subjected to other high temperature processes, the PCB need to be stored in sealed MBB with desiccant or desiccator at <5%RH to ensure no LEDs have exceeded their floor life of 672 hours.

E. Baking is required if:

- "10%" is Not blue and "5%" HIC indicator turns pink.
- The LEDs are exposed to condition of >30°C / 60% RH at any time.
- The LEDs floor life exceeded 672 hours.

Recommended baking condition: 60±5°C for 20 hours.

Intensity Bin Select (X_5X_6)

Individual reel will contain parts from one half bin only

X_5	Min Iv Bin
X_6	
0	Full Distribution
2	2 half bins starting from X_51
3	3 half bins starting from X_51
4	4 half bins starting from X_51
5	5 half bins starting from X_51
6	2 half bins starting from X_52
7	3 half bins starting from X_52
8	4 half bins starting from X_52
9	5 half bins starting from X_52

Intensity Bin Limits

Bin ID	Min (mcd)	Max (mcd)
U1	450.00	560.00
U2	560.00	715.00
V1	715.00	900.00
V2	900.00	1125.00
W1	1125.00	1400.00
W2	1400.00	1800.00
X1	1800.00	2240.00
X2	2240.00	2850.00
Y1	2850.00	3550.00
Y2	3550.00	4500.00
Z1	4500.00	5600.00
Z2	5600.00	7150.00
11	7150.00	9000.00
12	9000.00	11250.00
21	11250.00	14000.00
22	14000.00	18000.00

Tolerance of each bin limit = ± 12%

Color Bin Select (X_7)

Individual reel will contain parts from 1 full bin only

X7	
0	Full Distribution
Z	A and B only
Y	B and C only
W	C and D only
V	D and E only
U	E and F only
T	F and G only
S	G and H only
Q	A, B and C only
P	B, C and D only
N	C, D and E only
M	D, E and F only
L	E, F and G only
K	F, G and H only
1	A, B, C and D only
2	E, F G and H only

Color Bin Limits

Blue	Min. (nm)	Max. (nm)
A	460.0	465.0
B	465.0	470.0
C	470.0	475.0
D	475.0	480.0

Cyan	Min. (nm)	Max. (nm)
A	490.0	495.0
B	495.0	500.0
C	500.0	505.0
D	505.0	510.0

Green	Min. (nm)	Max. (nm)
A	515.0	520.0
B	520.0	525.0
C	525.0	530.0
D	530.0	535.0

Amber	Min. (nm)	Max. (nm)
A	582.0	584.5
B	584.5	587.0
C	587.0	589.5
D	589.5	592.0
E	592.0	594.5
F	594.5	597.0

Orange	Min. (nm)	Max. (nm)
A	597.0	600.0
B	600.0	603.0
C	603.0	606.0
D	606.0	609.0
E	609.0	612.0

Red/Orange	Min. (nm)	Max. (nm)
A	611.0	616.0
B	616.0	620.0

Red	Min. (nm)	Max. (nm)
Full Distribution		

Tolerance of each bin limit = ±1nm

Packaging Option (X_8X_9)

Option	Test Current	Package Type	Reel Size
M1	50mA	Top Mount	13 inch
M2	30mA	Top Mount	13 inch

Forward Voltage Bin Table

For HSMV – A43x-xxxxx only

Bin	Min.	Max.
VA	1.9	2.2
VB	2.2	2.5
VC	2.5	2.8
VD	2.8	3.1
VE	3.1	3.4

Tolerance for each bin limit = ± 0.1V

For product information and a complete list of distributors, please go to our web site: **www.avagotech.com**

Avago, Avago Technologies, and the A logo are trademarks of Avago Technologies in the United States and other countries.
Data subject to change. Copyright © 2005-2014 Avago Technologies. All rights reserved. Obsoletes AV01-0313EN
AV02-0208EN - December 16, 2014

Компания «ЭлектроПласт» предлагает заключение долгосрочных отношений при поставках импортных электронных компонентов на взаимовыгодных условиях!

Наши преимущества:

- Оперативные поставки широкого спектра электронных компонентов отечественного и импортного производства напрямую от производителей и с крупнейших мировых складов;
- Поставка более 17-ти миллионов наименований электронных компонентов;
- Поставка сложных, дефицитных, либо снятых с производства позиций;
- Оперативные сроки поставки под заказ (от 5 рабочих дней);
- Экспресс доставка в любую точку России;
- Техническая поддержка проекта, помощь в подборе аналогов, поставка прототипов;
- Система менеджмента качества сертифицирована по Международному стандарту ISO 9001;
- Лицензия ФСБ на осуществление работ с использованием сведений, составляющих государственную тайну;
- Поставка специализированных компонентов (Xilinx, Altera, Analog Devices, Intersil, Interpoint, Microsemi, Aeroflex, Peregrine, Syfer, Eurofarad, Texas Instrument, Miteq, Cobham, E2V, MA-COM, Hittite, Mini-Circuits,General Dynamics и др.);

Помимо этого, одним из направлений компании «ЭлектроПласт» является направление «Источники питания». Мы предлагаем Вам помощь Конструкторского отдела:

- Подбор оптимального решения, техническое обоснование при выборе компонента;
- Подбор аналогов;
- Консультации по применению компонента;
- Поставка образцов и прототипов;
- Техническая поддержка проекта;
- Защита от снятия компонента с производства.

Как с нами связаться

Телефон: 8 (812) 309 58 32 (многоканальный)
Факс: 8 (812) 320-02-42
Электронная почта: org@eplast1.ru
Адрес: 198099, г. Санкт-Петербург, ул. Калинина, дом 2, корпус 4, литера А.