FAIRCHILD SEMICONDUCTOR™

April 2000

QFET™

FQD7N30 / FQU7N30

300V N-Channel MOSFET

General Description

These N-Channel enhancement mode power field effect transistors are produced using Fairchild's proprietary, planar stripe, DMOS technology.
This advanced technology has been especially tailored to minimize on-state resistance, provide superior switching performance, and withstand high energy pulse in the avalanche and commutation mode. These devices are well suited for high efficiency switching DC/DC converters, switch mode power supply.

Features

- 5.5A, 300V, $R_{DS(on)}$ = 0.7Ω @V_{GS} = 10 V
- Low gate charge (typical 13 nC)
- Low Crss (typical 12 pF)
- Fast switching
- 100% avalanche tested
- Improved dv/dt capability

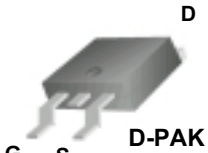

D-PAK
FQD Series

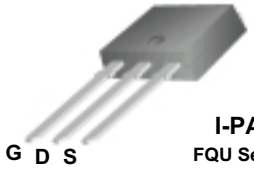

I-PAK
FQU Series

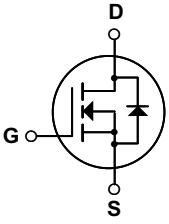

Absolute Maximum Ratings

T_C = 25°C unless otherwise noted

Symbol	Parameter		FQD7N30 / FQU7N30	Units
V_{DSS}	Drain-Source Voltage		300	V
I_D	Drain Current - Continuous (T_C = 25°C)		5.5	A
	- Continuous (T_C = 100°C)		3.48	A
I_{DM}	Drain Current - Pulsed	(Note 1)	22	A
V_{GSS}	Gate-Source Voltage		± 30	V
E_{AS}	Single Pulsed Avalanche Energy	(Note 2)	380	mJ
I_{AR}	Avalanche Current	(Note 1)	5.5	A
E_{AR}	Repetitive Avalanche Energy	(Note 1)	5.0	mJ
dv/dt	Peak Diode Recovery dv/dt	(Note 3)	4.5	V/ns
P_D	Power Dissipation (T_A = 25°C) *		2.5	W
	Power Dissipation (T_C = 25°C)		50	W
	- Derate above 25°C		0.4	W/°C
T_J, T_{STG}	Operating and Storage Temperature Range		-55 to +150	°C
T_L	Maximum lead temperature for soldering purposes, 1/8" from case for 5 seconds		300	°C

Thermal Characteristics

Symbol	Parameter	Typ	Max	Units
$R_{\theta JC}$	Thermal Resistance, Junction-to-Case	--	2.5	°C/W
$R_{\theta JA}$	Thermal Resistance, Junction-to-Ambient *	--	50	°C/W
$R_{\theta JA}$	Thermal Resistance, Junction-to-Ambient	--	110	°C/W

* When mounted on the minimum pad size recommended (PCB Mount)

©2000 Fairchild Semiconductor International

Electrical Characteristics

T_C = 25°C unless otherwise noted

Symbol	Parameter	Test Conditions	Min	Typ	Max	Units
Off Characteristics						
BV_{DSS}	Drain-Source Breakdown Voltage	V_{GS} = 0 V, I_D = 250 μA	300	--	--	V
ΔBV_{DSS} / ΔT_J	Breakdown Voltage Temperature Coefficient	I_D = 250 μA, Referenced to 25°C	--	0.3	--	V/°C
I_{DSS}	Zero Gate Voltage Drain Current	V_{DS} = 300 V, V_{GS} = 0 V	--	--	1	μA
		V_{DS} = 240 V, T_C = 125°C	--	--	10	μA
I_{GSSF}	Gate-Body Leakage Current, Forward	V_{GS} = 30 V, V_{DS} = 0 V	--	--	100	nA
I_{GSSR}	Gate-Body Leakage Current, Reverse	V_{GS} = -30 V, V_{DS} = 0 V	--	--	-100	nA
On Characteristics						
$V_{GS(th)}$	Gate Threshold Voltage	V_{DS} = V_{GS}, I_D = 250 μA	3.0	--	5.0	V
$R_{DS(on)}$	Static Drain-Source On-Resistance	V_{GS} = 10 V, I_D = 2.75 A	--	0.53	0.7	Ω
g_{FS}	Forward Transconductance	V_{DS} = 50 V, I_D = 2.75 A (Note 4)	--	4.0	--	S
Dynamic Characteristics						
C_{iss}	Input Capacitance	V_{DS} = 25 V, V_{GS} = 0 V, f = 1.0 MHz	--	470	610	pF
C_{oss}	Output Capacitance		--	100	130	pF
C_{rss}	Reverse Transfer Capacitance		--	12	16	pF
Switching Characteristics						
$t_{d(on)}$	Turn-On Delay Time	V_{DD} = 150 V, I_D = 7.0 A, R_G = 25 Ω (Note 4, 5)	--	13	35	ns
t_r	Turn-On Rise Time		--	75	160	ns
$t_{d(off)}$	Turn-Off Delay Time		--	25	60	ns
t_f	Turn-Off Fall Time		--	35	80	ns
Q_g	Total Gate Charge	V_{DS} = 240 V, I_D = 7.0 A, V_{GS} = 10 V (Note 4, 5)	--	13	17	nC
Q_{gs}	Gate-Source Charge		--	3.4	--	nC
Q_{gd}	Gate-Drain Charge		--	6.4	--	nC
Drain-Source Diode Characteristics and Maximum Ratings						
I_S	Maximum Continuous Drain-Source Diode Forward Current		--	--	5.5	A
I_{SM}	Maximum Pulsed Drain-Source Diode Forward Current		--	--	22	A
V_{SD}	Drain-Source Diode Forward Voltage	V_{GS} = 0 V, I_S = 5.5 A	--	--	1.5	V
t_{rr}	Reverse Recovery Time	V_{GS} = 0 V, I_S = 7.0 A, dI_F / dt = 100 A/μs (Note 4)	--	150	--	ns
Q_{rr}	Reverse Recovery Charge		--	0.74	--	μC

Notes:
1. Repetitive Rating : Pulse width limited by maximum junction temperature
2. L = 21mH, I_{AS} = 5.5A, V_{DD} = 50V, R_G = 25 Ω, Starting T_J = 25°C
3. I_{SD} ≤ 7.0A, di/dt ≤ 200A/μs, V_{DD} ≤ BV_{DSS}, Starting T_J = 25°C
4. Pulse Test : Pulse width ≤ 300μs, Duty cycle ≤ 2%
5. Essentially independent of operating temperature

©2000 Fairchild Semiconductor International

Typical Characteristics

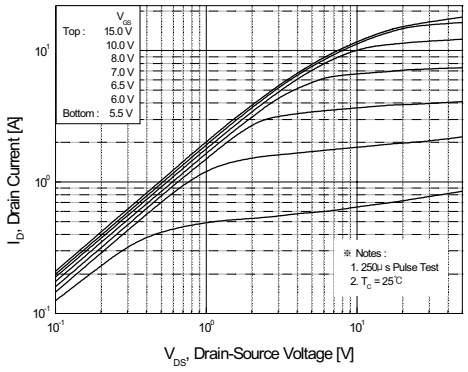

Figure 1. On-Region Characteristics

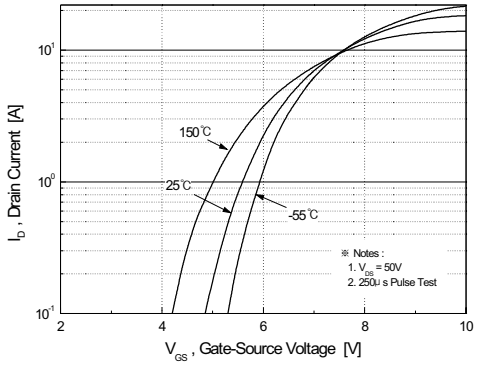

Figure 2. Transfer Characteristics

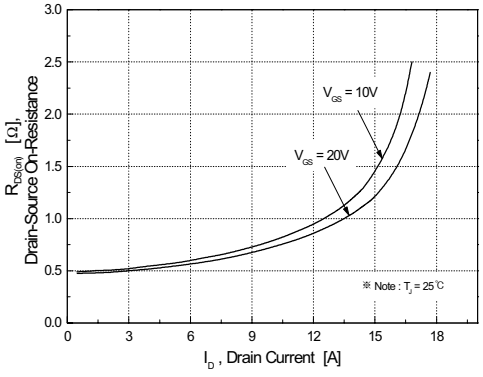

Figure 3. On-Resistance Variation vs. Drain Current and Gate Voltage

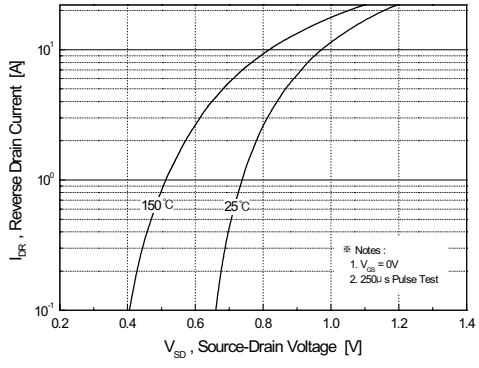

Figure 4. Body Diode Forward Voltage Variation vs. Source Current and Temperature

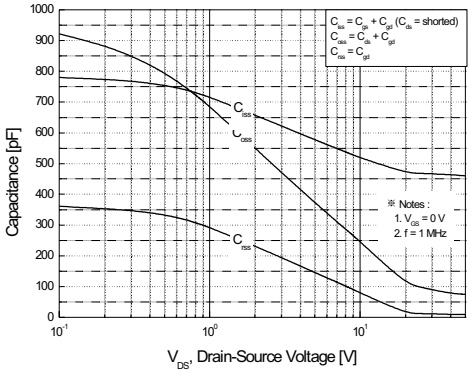

Figure 5. Capacitance Characteristics

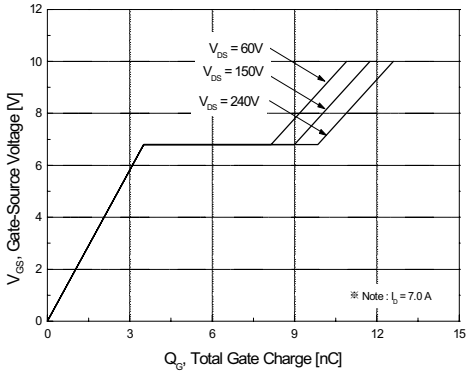

Figure 6. Gate Charge Characteristics

©2000 Fairchild Semiconductor International

Typical Characteristics (Continued)

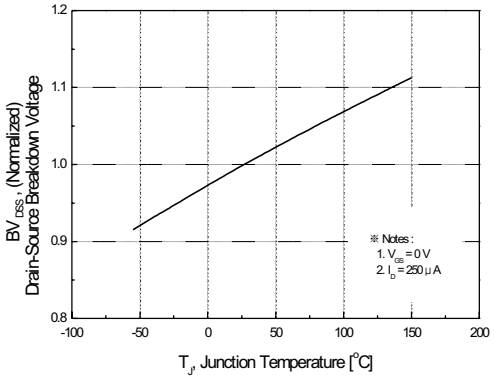

Figure 7. Breakdown Voltage Variation vs. Temperature

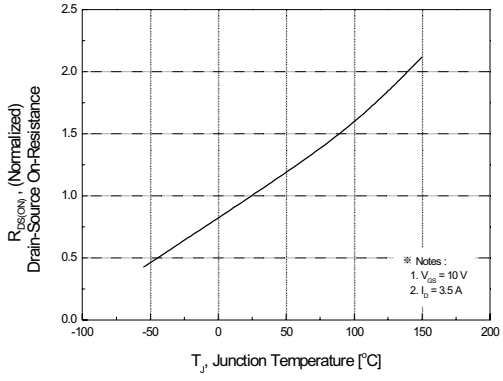

Figure 8. On-Resistance Variation vs. Temperature

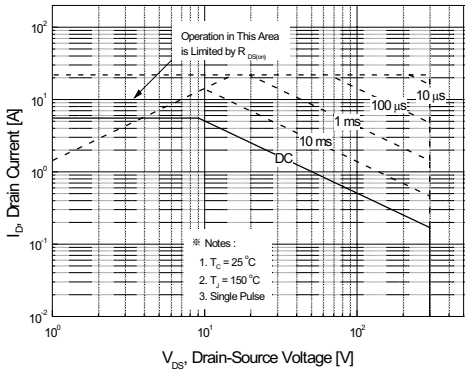

Figure 9. Maximum Safe Operating Area

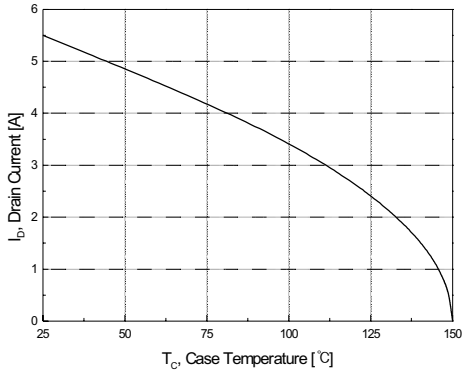

Figure 10. Maximum Drain Current vs. Case Temperature

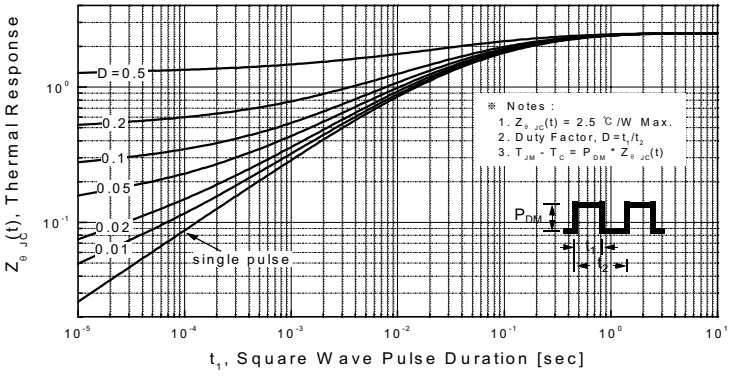

Figure 11. Transient Thermal Response Curve

©2000 Fairchild Semiconductor International

Gate Charge Test Circuit & Waveform

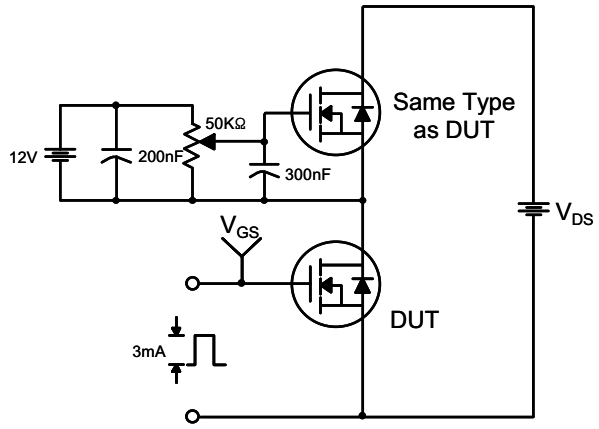

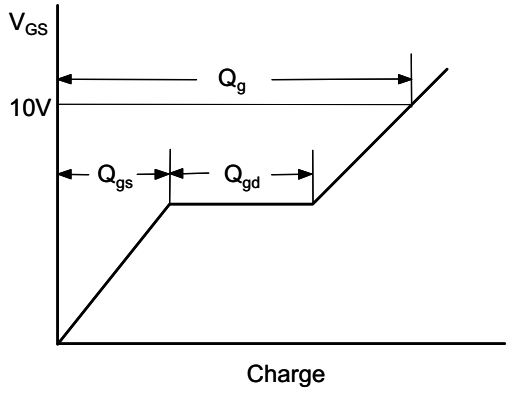

Resistive Switching Test Circuit & Waveforms

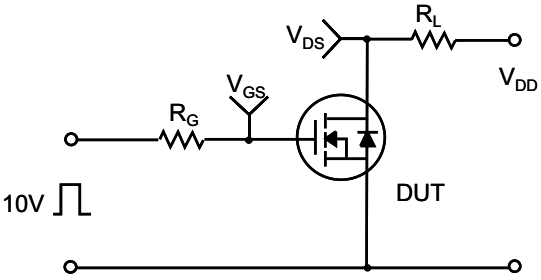

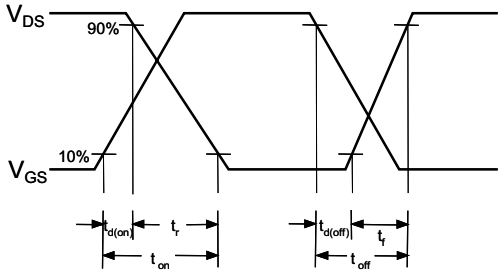

Unclamped Inductive Switching Test Circuit & Waveforms

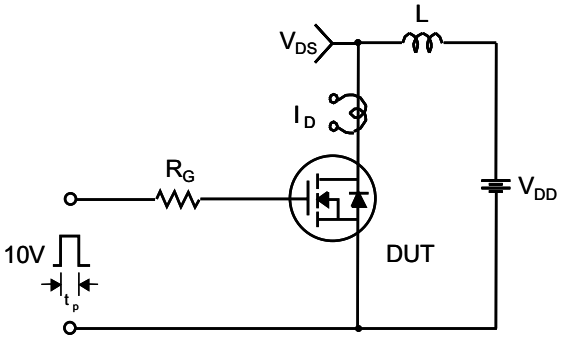

$$E_{AS} = \frac{1}{2} L I_{AS}^2 \frac{BV_{DSS}}{BV_{DSS} - V_{DD}}$$

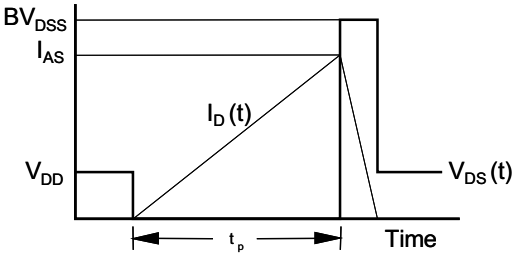

©2000 Fairchild Semiconductor International

Peak Diode Recovery dv/dt Test Circuit & Waveforms

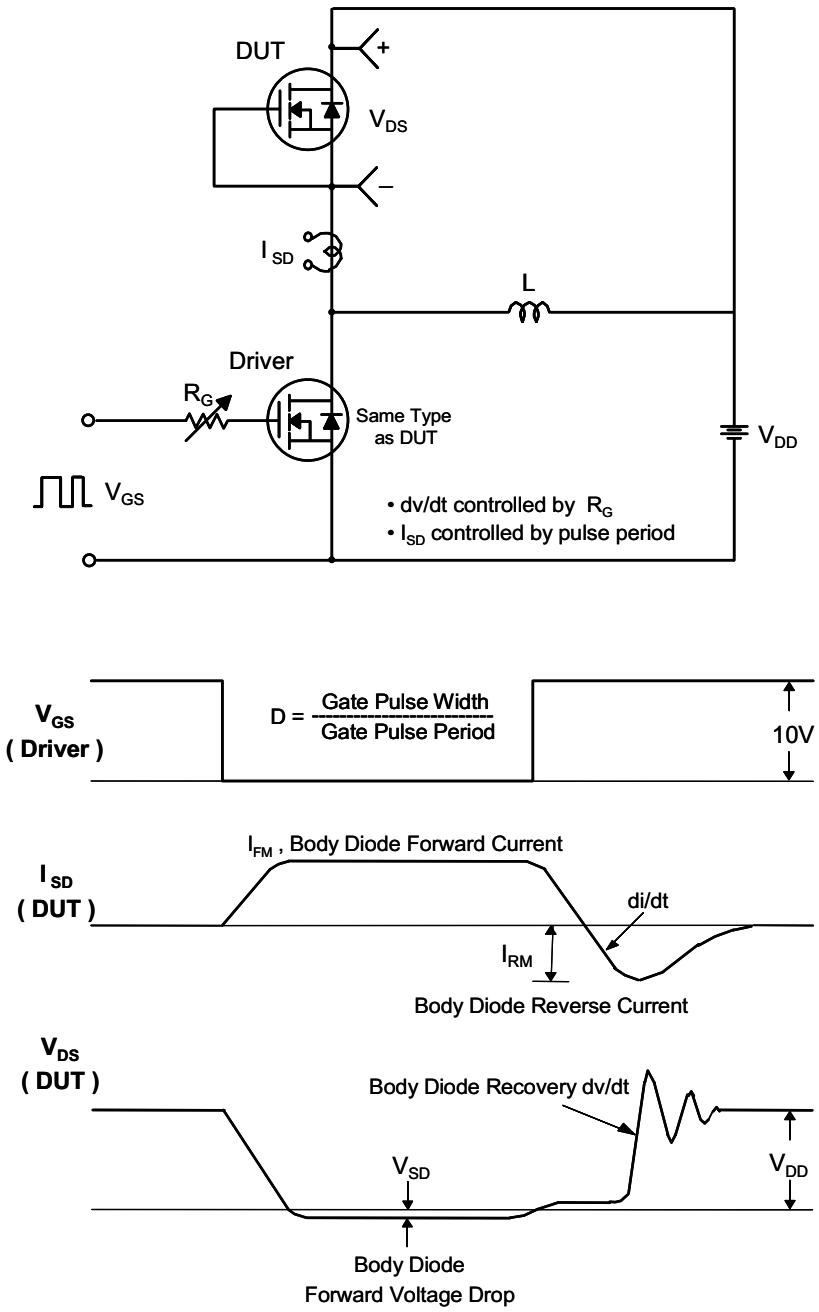

©2000 Fairchild Semiconductor International

Package Dimensions

D - PAK

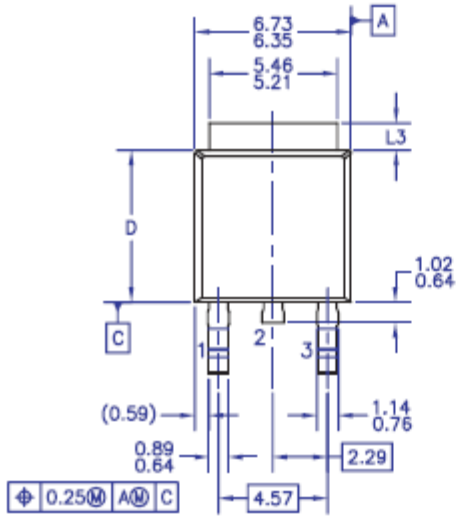

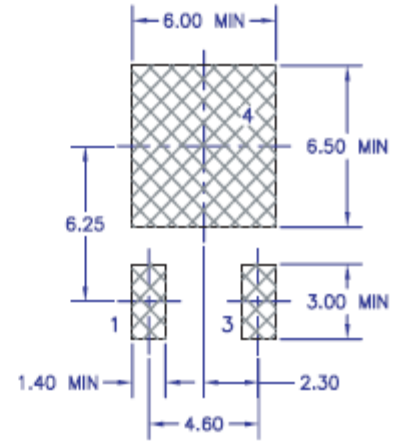

LAND PATTERN RECOMMENDATION

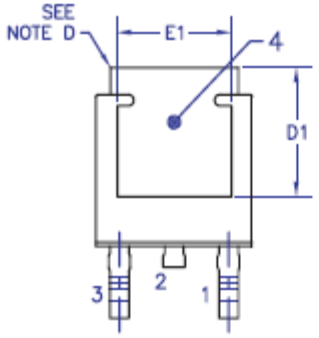

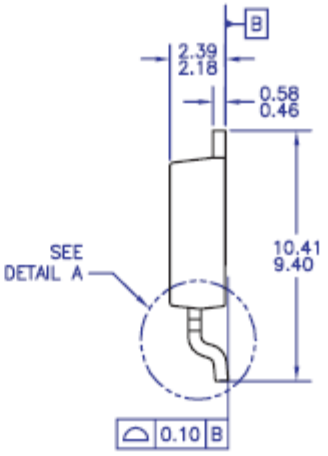

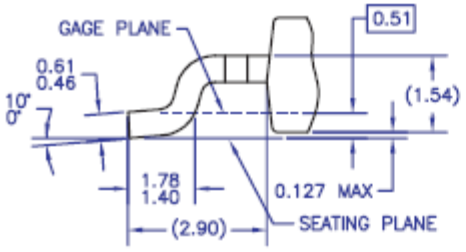

DETAIL A
(ROTATED -90°)
SCALE: 12X

Dimensions in Millimeters

©2000 Fairchild Semiconductor International

Package Dimensions (Continued)

I - PAK

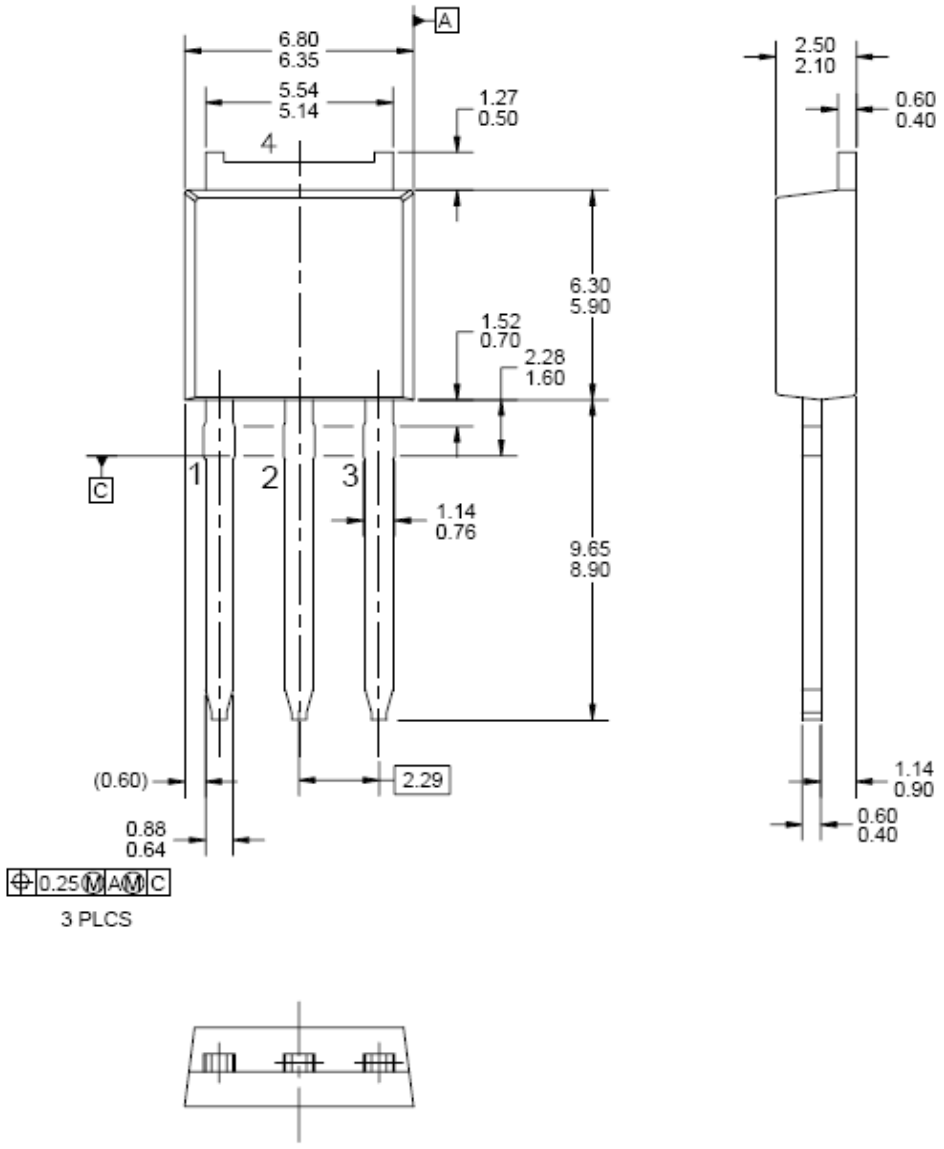

Dimensions in Millimeters

©2000 Fairchild Semiconductor International

TRADEMARKS

The following are registered and unregistered trademarks Fairchild Semiconductor owns or is authorized to use and is not intended to be an exhaustive list of all such trademarks.

ACEx™
Bottomless™
CoolFET™
CROSSVOLT™
E^2CMOS™
FACT™
FACT Quiet Series™
FAST®
FASTr™
GTO™
HiSeC™
ISOPLANAR™
MICROWIRE™
POP™
PowerTrench®
QFET™
QS™
Quiet Series™
SuperSOT™-3
SuperSOT™-6
SuperSOT™-8
SyncFET™
TinyLogic™
UHC™
VCX™

DISCLAIMER

FAIRCHILD SEMICONDUCTOR RESERVES THE RIGHT TO MAKE CHANGES WITHOUT FURTHER NOTICE TO ANY PRODUCTS HEREIN TO IMPROVE RELIABILITY, FUNCTION OR DESIGN. FAIRCHILD DOES NOT ASSUME ANY LIABILITY ARISING OUT OF THE APPLICATION OR USE OF ANY PRODUCT OR CIRCUIT DESCRIBED HEREIN; NEITHER DOES IT CONVEY ANY LICENSE UNDER ITS PATENT RIGHTS, NOR THE RIGHTS OF OTHERS.

LIFE SUPPORT POLICY

FAIRCHILD'S PRODUCTS ARE NOT AUTHORIZED FOR USE AS CRITICAL COMPONENTS IN LIFE SUPPORT DEVICES OR SYSTEMS WITHOUT THE EXPRESS WRITTEN APPROVAL OF FAIRCHILD SEMICONDUCTOR INTERNATIONAL.

As used herein:

1. Life support devices or systems are devices or systems which, (a) are intended for surgical implant into the body, or (b) support or sustain life, or (c) whose failure to perform when properly used in accordance with instructions for use provided in the labeling, can be reasonably expected to result in significant injury to the user.
2. A critical component is any component of a life support device or system whose failure to perform can be reasonably expected to cause the failure of the life support device or system, or to affect its safety or effectiveness.

PRODUCT STATUS DEFINITIONS

Definition of Terms

Datasheet Identification	Product Status	Definition
Advance Information	Formative or In Design	This datasheet contains the design specifications for product development. Specifications may change in any manner without notice.
Preliminary	First Production	This datasheet contains preliminary data, and supplementary data will be published at a later date. Fairchild Semiconductor reserves the right to make changes at any time without notice in order to improve design.
No Identification Needed	Full Production	This datasheet contains final specifications. Fairchild Semiconductor reserves the right to make changes at any time without notice in order to improve design.
Obsolete	Not In Production	This datasheet contains specifications on a product that has been discontinued by Fairchild semiconductor. The datasheet is printed for reference information only.

©2000 Fairchild Semiconductor International

Компания «ЭлектроПласт» предлагает заключение долгосрочных отношений при поставках импортных электронных компонентов на взаимовыгодных условиях!

Наши преимущества:

- Оперативные поставки широкого спектра электронных компонентов отечественного и импортного производства напрямую от производителей и с крупнейших мировых складов;
- Поставка более 17-ти миллионов наименований электронных компонентов;
- Поставка сложных, дефицитных, либо снятых с производства позиций;
- Оперативные сроки поставки под заказ (от 5 рабочих дней);
- Экспресс доставка в любую точку России;
- Техническая поддержка проекта, помощь в подборе аналогов, поставка прототипов;
- Система менеджмента качества сертифицирована по Международному стандарту ISO 9001;
- Лицензия ФСБ на осуществление работ с использованием сведений, составляющих государственную тайну;
- Поставка специализированных компонентов (Xilinx, Altera, Analog Devices, Intersil, Interpoint, Microsemi, Aeroflex, Peregrine, Syfer, Eurofarad, Texas Instrument, Miteq, Cobham, E2V, MA-COM, Hittite, Mini-Circuits,General Dynamics и др.);

Помимо этого, одним из направлений компании «ЭлектроПласт» является направление «Источники питания». Мы предлагаем Вам помощь Конструкторского отдела:

- Подбор оптимального решения, техническое обоснование при выборе компонента;
- Подбор аналогов;
- Консультации по применению компонента;
- Поставка образцов и прототипов;
- Техническая поддержка проекта;
- Защита от снятия компонента с производства.

Как с нами связаться

Телефон: 8 (812) 309 58 32 (многоканальный)
Факс: 8 (812) 320-02-42
Электронная почта: org@eplast1.ru
Адрес: 198099, г. Санкт-Петербург, ул. Калинина, дом 2, корпус 4, литера А.