DUAL N-CHANNEL AND DUAL P-CHANNEL MATCHED MOSFET PAIR

GENERAL DESCRIPTION

The ALD1103 is a monolithic dual N-channel and dual P-channel matched transistor pair intended for a broad range of analog applications. These enhancement-mode transistors are manufactured with Advanced Linear Devices' enhanced ACMOS silicon gate CMOS process. It consists of an ALD1101 N-channel MOSFET pair and an ALD1102 P-channel MOSFET pair in one package.

The ALD1103 offers high input impedance and negative current temperature coefficient. The transistor pair is matched for minimum offset voltage and differential thermal response, and it is designed for precision signal switching and amplifying applications in +2V to +12V systems where low input bias current, low input capacitance and fast switching speed are desired. Since these are MOSFET devices, they feature very large (almost infinite) current gain in a low frequency, or near DC, operating environment. When used in pairs, a dual CMOS analog switch can be constructed. In addition, the ALD1103 is intended as a building block for differential amplifier input stages, transmission gates, and multiplexer applications.

The ALD1103 is suitable for use in precision applications which require very high current gain, beta, such as current mirrors and current sources. The high input impedance and the high DC current gain of the Field Effect Transistors result in extremely low current loss through the control gate. The DC current gain is limited by the gate input leakage current, which is specified at 50pA at room temperature. For example, DC beta of the device at a drain current of 5mA at 25°C is = 5mA/50pA = 100,000,000.

FEATURES

- Thermal tracking between N-channel and P-channel pairs
- Low threshold voltage of 0.7V for both N-channel & P-channel MOSFETS
- Low input capacitance
- Low Vos -- 10mV
- High input impedance -- $10^{13}\Omega$ typical
- Low input and output leakage currents
- Negative current (I_{DS}) temperature coefficient
- Enhancement mode (normally off)
- DC current gain 10^9
- Matched N-channel and matched P-channel in one package
- RoHS compliant

ORDERING INFORMATION (“L” suffix denotes lead-free (RoHS))

Operating Temperature Range*		
0°C to +70°C	0°C to +70°C	-55°C to +125°C
14-Pin Small Outline Package (SOIC)	14-Pin Plastic Dip Package	14-Pin CERDIP Package
ALD1103SBL	ALD1103PBL	ALD1103DB

* Contact factory for leaded (non-RoHS) or high temperature versions.

APPLICATIONS

- Precision current mirrors
- Complementary push-pull linear drives
- Analog switches
- Choppers
- Differential amplifier input stage
- Voltage comparator
- Data converters
- Sample and Hold
- Analog inverter
- Precision matched current sources

PIN CONFIGURATION

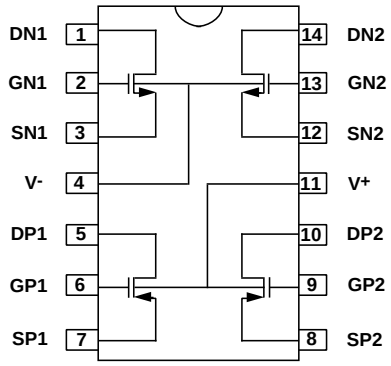

TOP VIEW
SBL, PBL, DB PACKAGES

BLOCK DIAGRAM

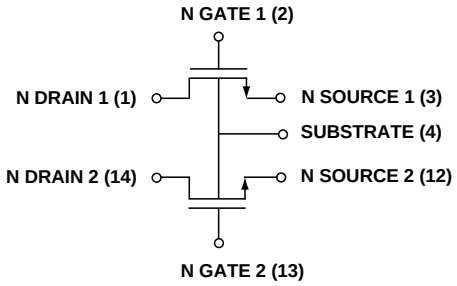

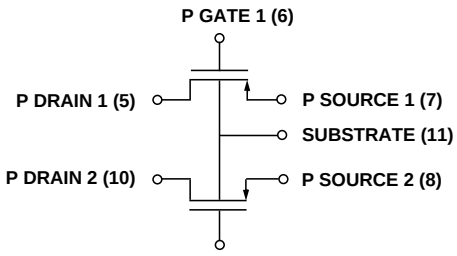

ABSOLUTE MAXIMUM RATINGS

Drain-source voltage, V_{DS} 10.6V
Gate-source voltage, V_{GS} 10.6V
Power dissipation 500mW
Operating temperature range SBL, PBL packages ..... 0°C to +70°C
DB package ..... -55°C to +125°C
Storage temperature range ..... -65°C to +150°C
Lead temperature, 10 seconds ..... +260°C
CAUTION: ESD Sensitive Device. Use static control procedures in ESD controlled environment.

OPERATING ELECTRICAL CHARACTERISTICS
T_A = 25°C unless otherwise specified

Parameter	Symbol	N - Channel Min	N - Channel Typ	N - Channel Max	Unit	Test Conditions	P - Channel Min	P - Channel Typ	P - Channel Max	Unit	Test Conditions
Gate Threshold Voltage	V_T	0.4	0.7	1.0	V	I_{DS} = 10µA V_{GS} = V_{DS}	-0.4	-0.7	-1.2	V	I_{DS} = -10µA V_{GS} = V_{DS}
Offset Voltage V_{GS1} - V_{GS2}	V_{OS}			10	mV	I_{DS} = 100µA V_{GS} = V_{DS}			10	mV	I_{DS} = -100µA V_{GS} = V_{DS}
Gate Threshold Temperature Drift	TC_{VT}		-1.2		mV/°C			-1.3		mV/°C	
On Drain Current	$I_{DS\ (ON)}$	25	40		mA	V_{GS} = V_{DS} = 5V	-8	-16		mA	V_{GS} = V_{DS} = -5V
Trans-. conductance	G_{fs}	5	10		mmho	V_{DS} = 5V I_{DS}= 10mA	2	4		mmho	V_{DS} = -5V I_{DS}= -10mA
Mismatch	ΔG_{fs}		0.5		%			0.5		%	
Output Conductance	G_{OS}		200		µmho	V_{DS} = 5V I_{DS} = 10mA		500		µmho	V_{DS} = -5V I_{DS} = -10mA
Drain Source ON Resistance	$R_{DS(ON)}$		50	75	Ω	V_{DS} = 0.1V V_{GS} = 5V		180	270	Ω	V_{DS} = -0.1V V_{GS} = -5V
Drain Source ON Resistance Mismatch	$\Delta R_{DS(ON)}$		0.5		%	V_{DS} = 0.1V V_{GS} = 5V		0.5		%	V_{DS} = -0.1V V_{GS} = -5V
Drain Source Breakdown Voltage	BV_{DSS}	12			V	I_{DS} = 10µA V_{GS} =0V	-12			V	I_{DS} = -10µA V_{GS} =0V
Off Drain Current	$I_{DS(OFF)}$		0.1	4 4	nA µA	V_{DS} =12V I_{GS} = 0V T_A = 125°C		0.1	4 4	nA µA	V_{DS} = -12V V_{GS} = 0V T_A = 125°C
Gate Leakage Current	I_{GSS}		1	50 10	pA nA	V_{DS} = 0V V_{GS} =12V T_A = 125°C		1	50 10	pA nA	V_{DS} = 0V V_{GS} =-12V T_A = 125°C
Input Capacitance	C_{ISS}		6	10	pF			6	10	pF	

TYPICAL P-CHANNEL PERFORMANCE CHARACTERISTICS

OUTPUT CHARACTERISTICS

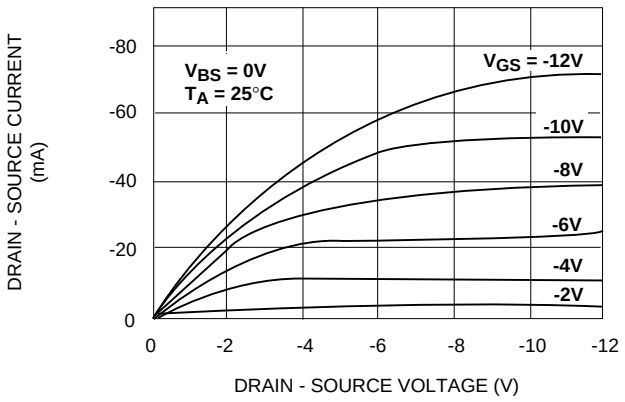

LOW VOLTAGE OUTPUT CHARACTERISTICS

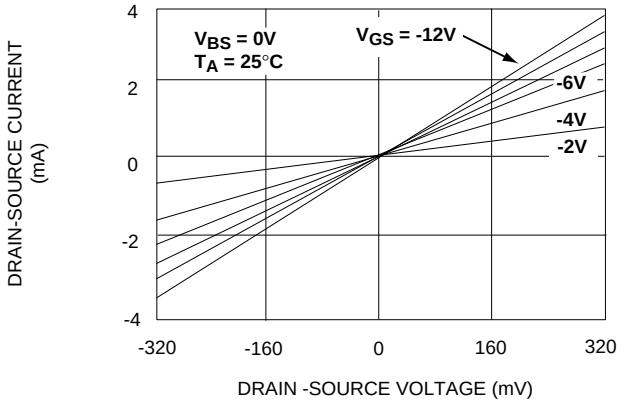

FORWARD TRANSCONDUCTANCE vs. DRAIN - SOURCE VOLTAGE

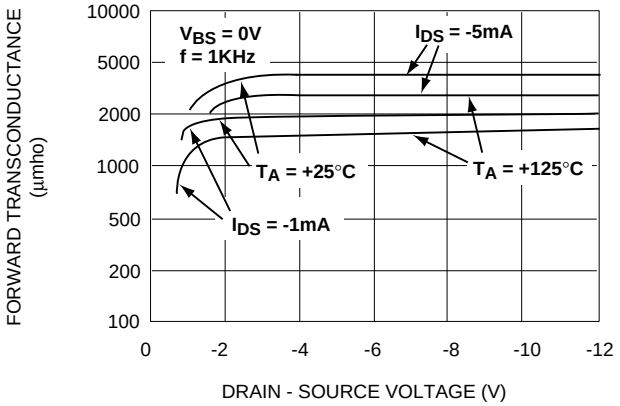

TRANSFER CHARACTERISTIC WITH SUBSTRATE BIAS

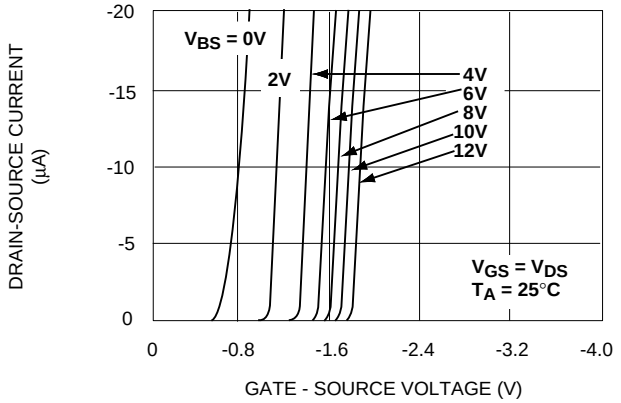

$R_{DS\ (ON)}$ vs. GATE - SOURCE VOLTAGE

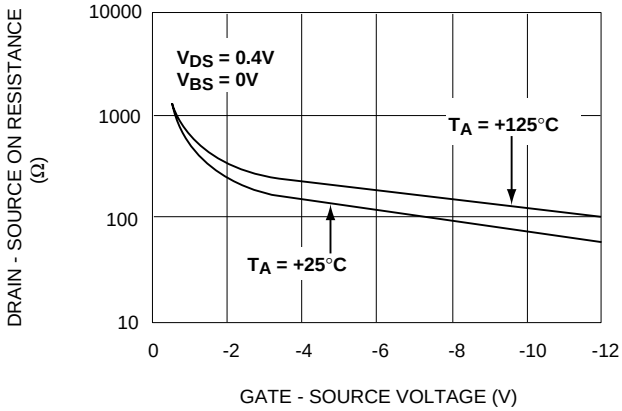

OFF DRAIN - CURRENT vs. TEMPERATURE

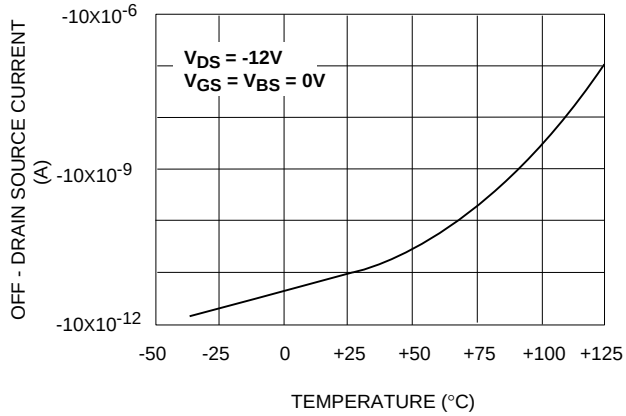

TYPICAL N-CHANNEL PERFORMANCE CHARACTERISTICS

OUTPUT CHARACTERISTICS

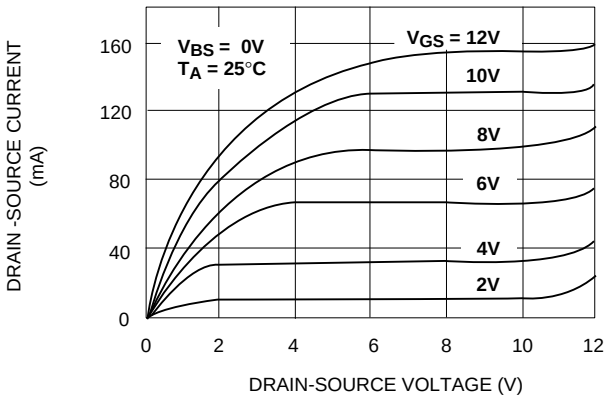

LOW VOLTAGE OUTPUT CHARACTERISTICS

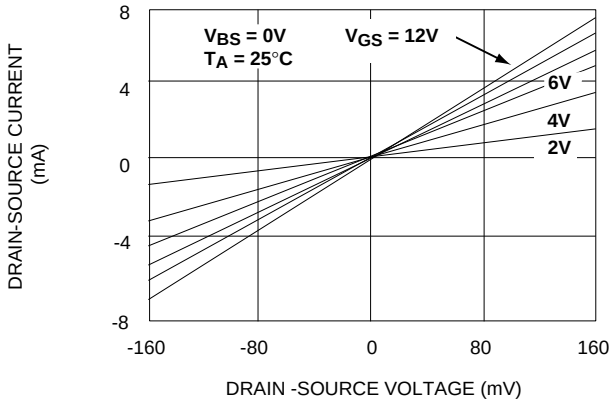

FORWARD TRANSCONDUCTANCE vs. DRAIN-SOURCE VOLTAGE

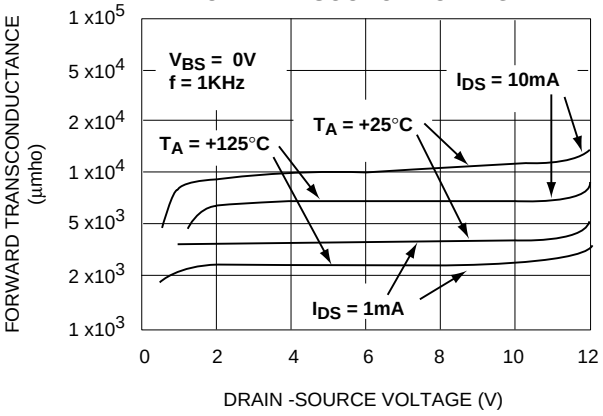

TRANSFER CHARACTERISTIC WITH SUBSTRATE BIAS

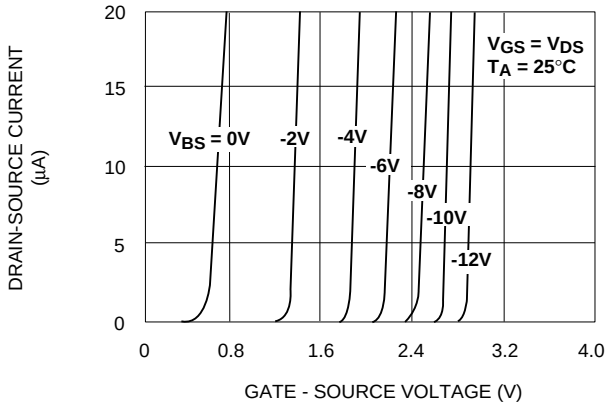

$R_{DS\ (ON)}$ vs. GATE - SOURCE VOLTAGE

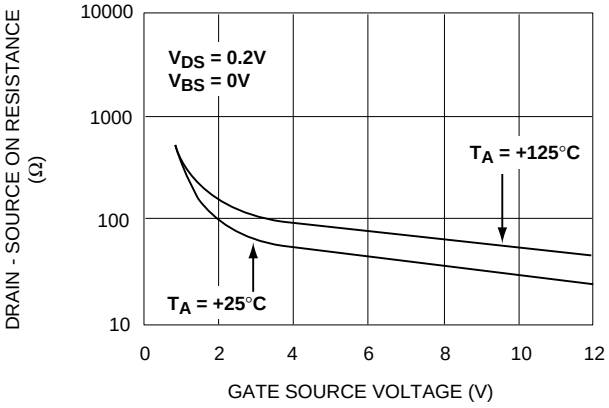

OFF DRAIN - CURRENT vs. TEMPERATURE

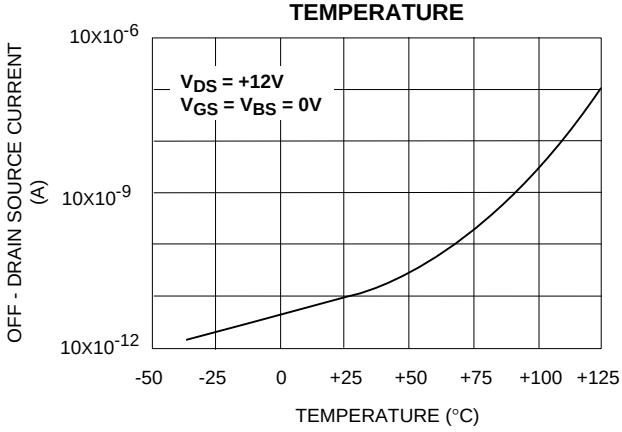

TYPICAL APPLICATIONS

CURRENT SOURCE MIRROR

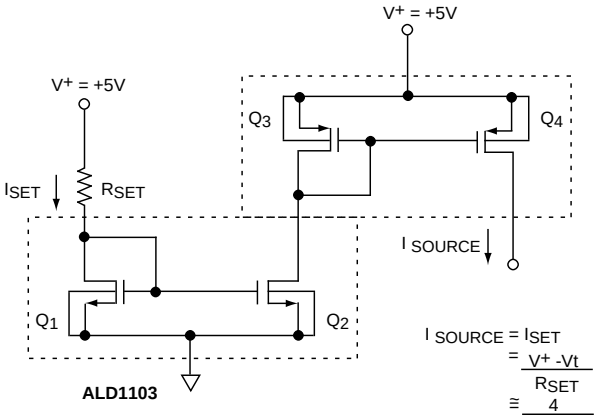

$I_{SOURCE} = I_{SET} = \frac{V^+ - V_t}{R_{SET}} \cong \frac{4}{R_{SET}}$

Q_1, Q_2: N - Channel MOSFET
Q_3, Q_4: P - Channel MOSFET

CURRENT SOURCE WITH GATE CONTROL

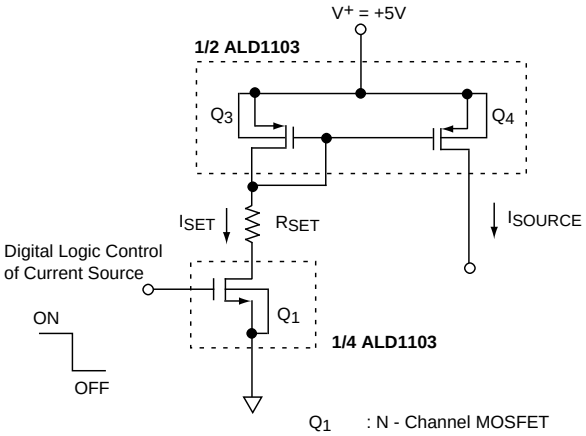

Q_1 : N - Channel MOSFET
Q_3,Q_4 : P - Channel MOSFET

DIFFERENTIAL AMPLIFIER

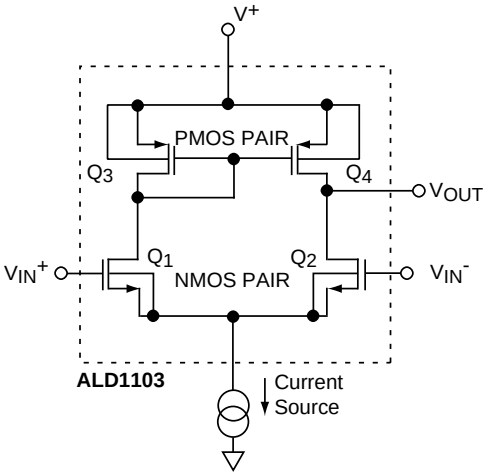

Q_1, Q_2: N - Channel MOSFET
Q_3, Q_4: P - Channel MOSFET

CURRENT SOURCE MULTIPLICATION

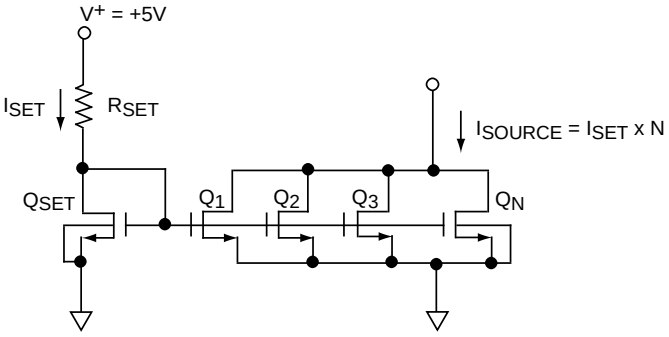

Q_{SET}, Q_1..Q_N: ALD 1101 or ALD 1103
N - Channel MOSFET

TYPICAL APPLICATIONS (cont.)

BASIC CURRENT SOURCES

N-CHANNEL CURRENT SOURCE

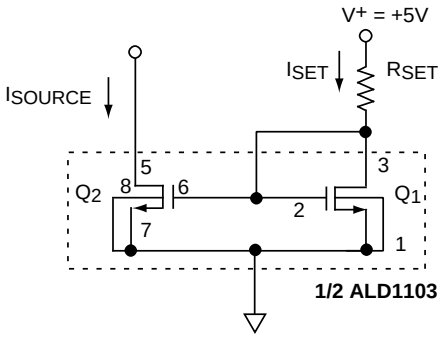

$$I_{SOURCE} = I_{SET} = \frac{V^+ - Vt}{R_{SET}} \cong \frac{V^+ - 1.0}{R_{SET}} \cong \frac{4}{R_{SET}}$$

Q_1, Q_2 : N - Channel MOSFET

P-CHANNEL CURRENT SOURCE

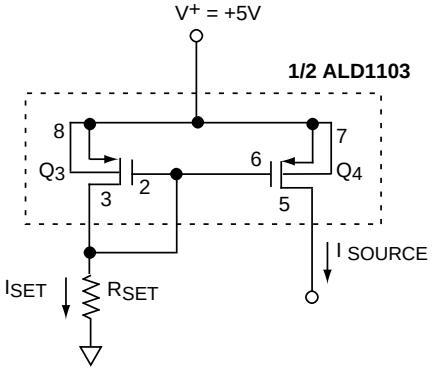

Q_3, Q_4: P - Channel MOSFET

CASCODE CURRENT SOURCES

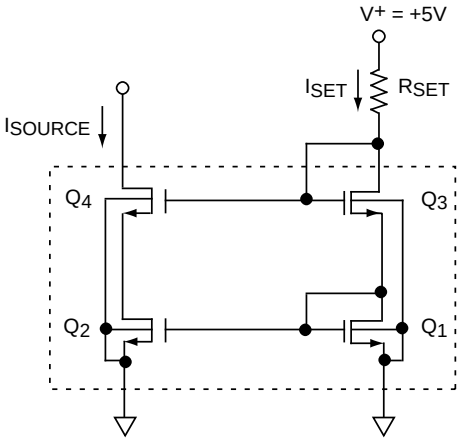

Q_1, Q_2, Q_3, Q_4: N - Channel MOSFET
(ALD1101 or ALD1103)

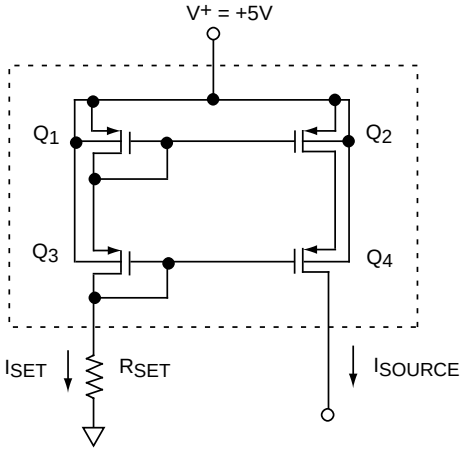

$$I_{SOURCE} = I_{SET} = \frac{V^+ - 2Vt}{R_{SET}} \cong \frac{3}{R_{SET}}$$

Q1, Q2, Q3, Q4: P - Channel MOSFET
(ALD1102 or ALD1103)

SOIC-14 PACKAGE DRAWING

14 Pin Plastic SOIC Package

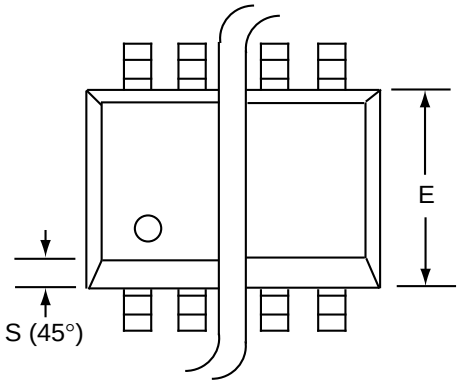

Dim	Millimeters		Inches	
	Min	Max	Min	Max
A	1.35	1.75	0.053	0.069
A_1	0.10	0.25	0.004	0.010
b	0.35	0.45	0.014	0.018
C	0.18	0.25	0.007	0.010
D-14	8.55	8.75	0.336	0.345
E	3.50	4.05	0.140	0.160
e	1.27 BSC		0.050 BSC	
H	5.70	6.30	0.224	0.248
L	0.60	0.937	0.024	0.037
Ø	0°	8°	0°	8°
S	0.25	0.50	0.010	0.020

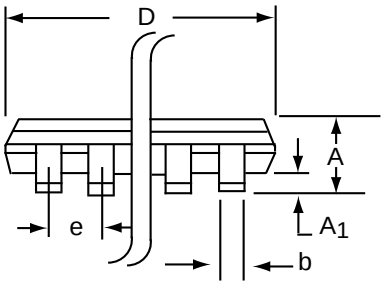

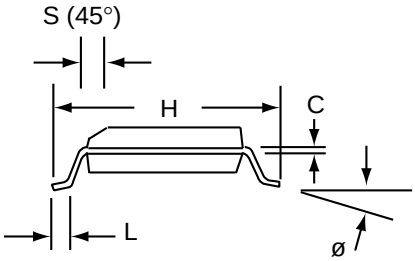

PDIP-14 PACKAGE DRAWING

14 Pin Plastic DIP Package

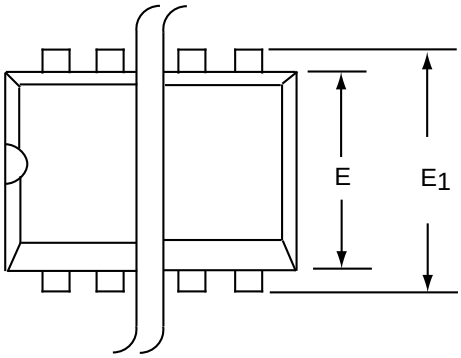

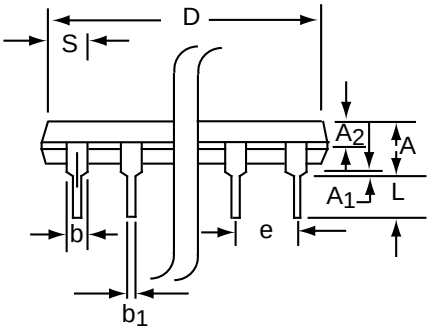

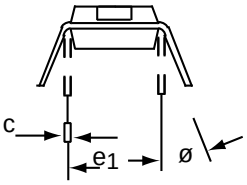

Dim	Millimeters		Inches	
	Min	Max	Min	Max
A	3.81	5.08	0.105	0.200
A_1	0.38	1.27	0.015	0.050
A_2	1.27	2.03	0.050	0.080
b	0.89	1.65	0.035	0.065
b_1	0.38	0.51	0.015	0.020
c	0.20	0.30	0.008	0.012
D-14	17.27	19.30	0.680	0.760
E	5.59	7.11	0.220	0.280
E_1	7.62	8.26	0.300	0.325
e	2.29	2.79	0.090	0.110
e_1	7.37	7.87	0.290	0.310
L	2.79	3.81	0.110	0.150
S-14	1.02	2.03	0.040	0.080
ø	0°	15°	0°	15°

CERDIP-14 PACKAGE DRAWING

14 Pin CERDIP Package

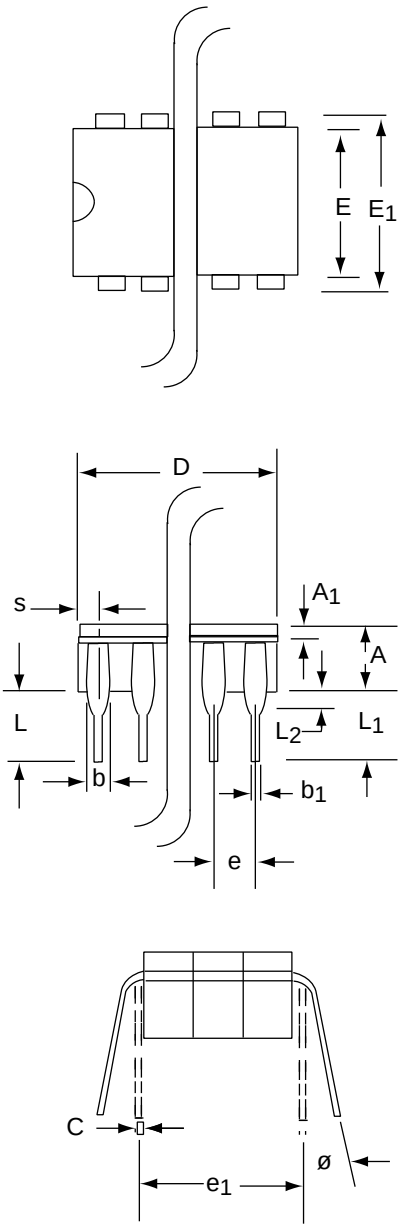

Dim	Millimeters		Inches	
	Min	Max	Min	Max
A	3.55	5.08	0.140	0.200
A_1	1.27	2.16	0.050	0.085
b	0.97	1.65	0.038	0.065
b_1	0.36	0.58	0.014	0.023
C	0.20	0.38	0.008	0.015
D-14	--	19.94	--	0.785
E	5.59	7.87	0.220	0.310
E_1	7.73	8.26	0.290	0.325
e	2.54 BSC		0.100 BSC	
e_1	7.62 BSC		0.300 BSC	
L	3.81	5.08	0.150	0.200
L_1	3.18	--	0.125	--
L_2	0.38	1.78	0.015	0.070
S	--	2.49	--	0.098
Ø	0°	15°	0°	15°

Компания «ЭлектроПласт» предлагает заключение долгосрочных отношений при поставках импортных электронных компонентов на взаимовыгодных условиях!

Наши преимущества:

- Оперативные поставки широкого спектра электронных компонентов отечественного и импортного производства напрямую от производителей и с крупнейших мировых складов;
- Поставка более 17-ти миллионов наименований электронных компонентов;
- Поставка сложных, дефицитных, либо снятых с производства позиций;
- Оперативные сроки поставки под заказ (от 5 рабочих дней);
- Экспресс доставка в любую точку России;
- Техническая поддержка проекта, помощь в подборе аналогов, поставка прототипов;
- Система менеджмента качества сертифицирована по Международному стандарту ISO 9001;
- Лицензия ФСБ на осуществление работ с использованием сведений, составляющих государственную тайну;
- Поставка специализированных компонентов (Xilinx, Altera, Analog Devices, Intersil, Interpoint, Microsemi, Aeroflex, Peregrine, Syfer, Eurofarad, Texas Instrument, Miteq, Cobham, E2V, MA-COM, Hittite, Mini-Circuits,General Dynamics и др.);

Помимо этого, одним из направлений компании «ЭлектроПласт» является направление «Источники питания». Мы предлагаем Вам помощь Конструкторского отдела:

- Подбор оптимального решения, техническое обоснование при выборе компонента;
- Подбор аналогов;
- Консультации по применению компонента;
- Поставка образцов и прототипов;
- Техническая поддержка проекта;
- Защита от снятия компонента с производства.

Как с нами связаться

Телефон: 8 (812) 309 58 32 (многоканальный)
Факс: 8 (812) 320-02-42
Электронная почта: org@eplast1.ru
Адрес: 198099, г. Санкт-Петербург, ул. Калинина, дом 2, корпус 4, литера А.