8-Bit Serial Input Constant-Current Latched LED Driver

Last Time Buy

This part is in production but has been determined to be LAST TIME BUY. This classification indicates that the product is obsolete and notice has been given. Sale of this device is currently restricted to existing customer applications. The device should not be purchased for new design applications because of obsolescence in the near future. Samples are no longer available.

Date of status change: November 1, 2010

Deadline for receipt of LAST TIME BUY orders: April 30, 2011

Recommended Substitutions:

For existing customer transition, and for new customers or new applications, refer to the A6279.

NOTE: For detailed information on purchasing options, contact your local Allegro field applications engineer or sales representative.

Allegro MicroSystems, Inc. reserves the right to make, from time to time, revisions to the anticipated product life cycle plan for a product to accommodate changes in production capabilities, alternative product availabilities, or market demand. The information included herein is believed to be accurate and reliable. However, Allegro MicroSystems, Inc. assumes no responsibility for its use; nor for any infringements of patents or other rights of third parties which may result from its use.

8-Bit Serial Input Constant-Current Latched LED Driver

Features and Benefits

- Up to 90 mA constant-current outputs
- Undervoltage lockout
- Low-power CMOS logic and latches
- High data-input rate
- Pin-compatible with TB62705CP

Packages

16-pin DIP
(A package)

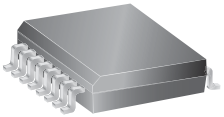

16-pin SOICW
(LW package)

Not to scale

Description

The A6275 is specifically designed for LED display applications. Each BiCMOS device includes an 8-bit CMOS shift register, accompanying data latches, and eight NPN constant-current sink drivers.

The CMOS shift register and latches allow direct interfacing with microprocessor-based systems. With a 5 V logic supply, typical serial data-input rates are up to 20 MHz. The LED drive current is determined by the user selection of a single resistor. A CMOS serial data output permits cascade connections in applications requiring additional drive lines. For inter-digit blanking, all output drivers can be disabled with an ENABLE input high. A similar 150 mA output device is available as the A6277; a similar 16-bit device is available as the A6276.

Two package styles are provided: a through-hole DIP (suffix A) and a surface-mount SOICW (suffix LW). Under normal applications, copper leadframes and low logic-power dissipation allow these devices to sink maximum rated current through all outputs continuously over the operating temperature range (90 mA, 0.9 V drop, 85°C). Both packages are lead (Pb) free, with 100% matte tin leadframe plating.

Functional Block Diagram

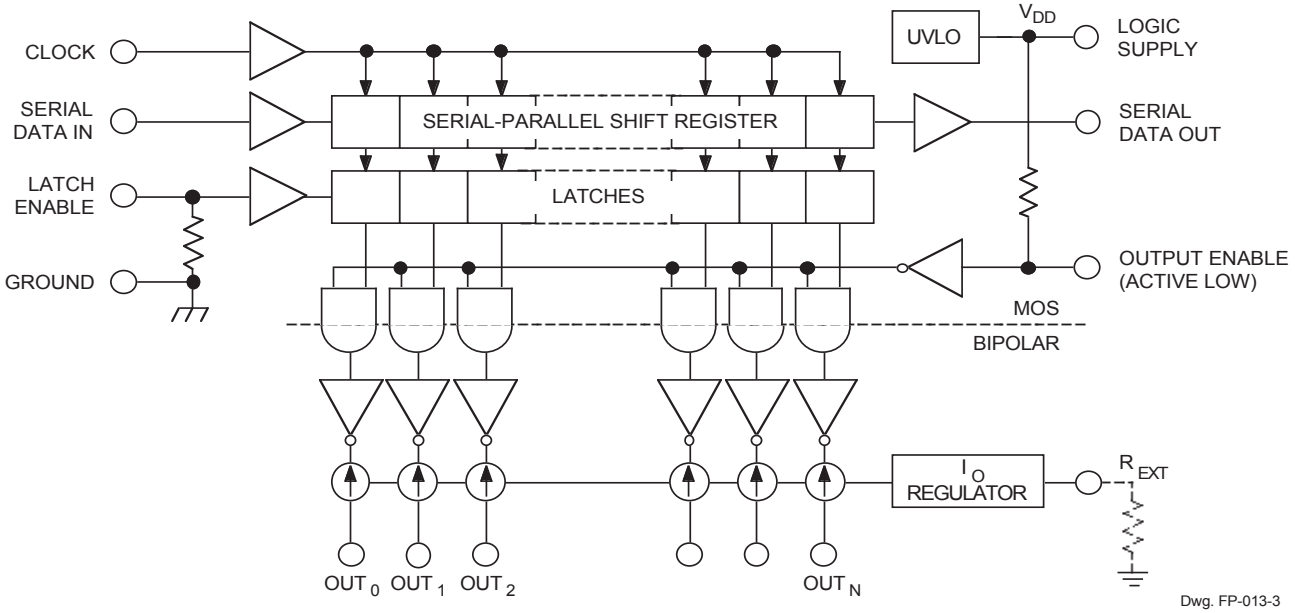

Selection Guide

Part Number	Package	Packing	Ambient Temperature (°C)
A6275EA-T	16-pin DIP	25 per tube	–40 to 85
A6275ELWTR-T	16-pin SOICW	1000 per reel	
A6275SLWTR-T	16-pin SOICW	1000 per reel	–20 to 85

Absolute Maximum Ratings*

Characteristic	Symbol	Notes	Rating	Units
Supply Voltage	V_{DD}		7.0	V
Input Voltage Range	V_I		–0.4 to V_{DD} + 0.4	V
Output Voltage Range	V_O		–0.5 to V_{DD} + 17	V
Output Current	I_O		90	mA
Ground Current	I_{GND}		750	mA
Operating Ambient Temperature	T_A	Range E	–40 to 85	ºC
		Range S	–20 to 85	ºC
Maximum Junction Temperature	T_J(max)		150	ºC
Storage Temperature	T_{stg}		–55 to 150	ºC

*These CMOS devices have input static protection (Class 2) but are still susceptible to damage if exposed to extremely high static electrical charges.

Thermal Characteristics may require derating at maximum conditions, see application information

Characteristic	Symbol	Test Conditions*	Value	Units
Package Thermal Resistance	$R_{\theta JA}$	Package A, 4-layer PCB based on JEDEC standard	38	ºC/W
		Package LW, 4-layer PCB based on JEDEC standard	48	ºC/W

*Additional thermal information available on the Allegro website.

Power Dissipation versus Ambient Temperature

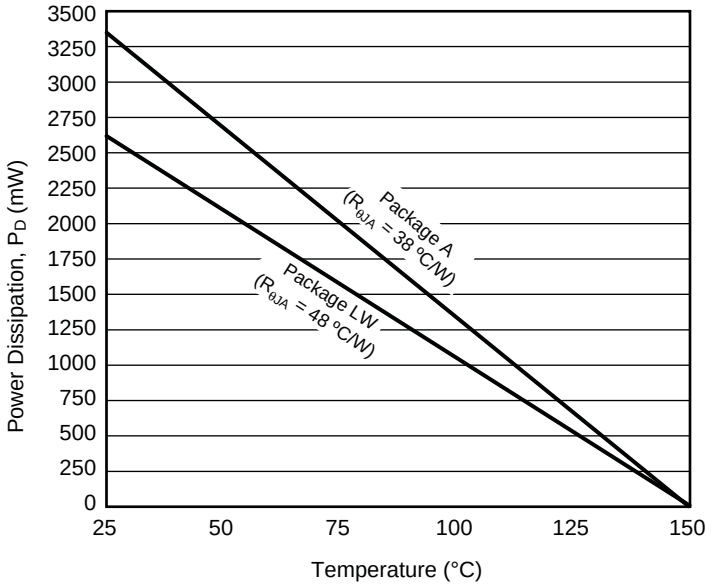

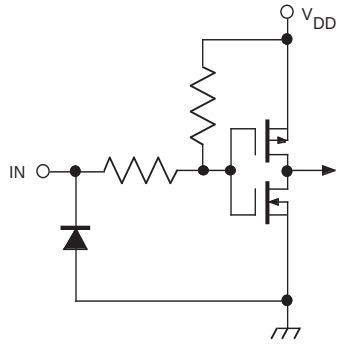

Dwg. EP-010-11

OUTPUT ENABLE (active low)

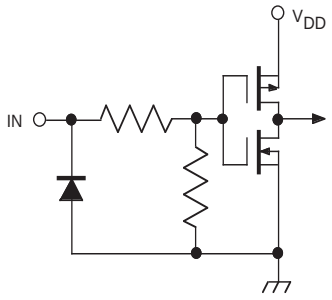

Dwg. EP-010-12

LATCH ENABLE

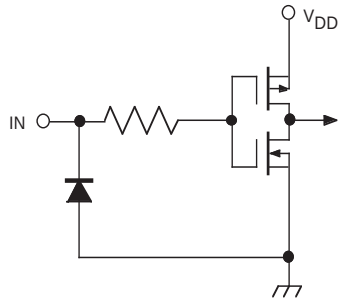

Dwg. EP-010-13

CLOCK and SERIAL DATA IN

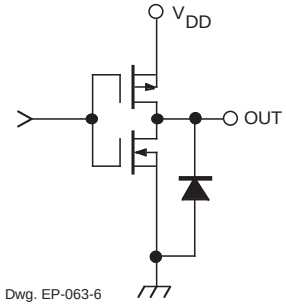

Dwg. EP-063-6

SERIAL DATA OUT

TRUTH TABLE

Serial Data Input	Clock Input	Shift Register Contents						Serial Data Output	Latch Enable Input	Latch Contents						Output Enable Input	Output Contents					
		I_1	I_2	I_3	...	I_{N-1}	I_N			I_1	I_2	I_3	...	I_{N-1}	I_N		I_1	I_2	I_3	...	I_{N-1}	I_N
H	↑	H	R_1	R_2	...	R_{N-2}	R_{N-1}	R_{N-1}														
L	↑	L	R_1	R_2	...	R_{N-2}	R_{N-1}	R_{N-1}														
X	↓	R_1	R_2	R_3	...	R_{N-1}	R_N	R_N														
		X	X	X	...	X	X	X	L	R_1	R_2	R_3	...	R_{N-1}	R_N							
		P_1	P_2	P_3	...	P_{N-1}	P_N	P_N	H	P_1	P_2	P_3	...	P_{N-1}	P_N	L	P_1	P_2	P_3	...	P_{N-1}	P_N
										X	X	X	...	X	X	H	H	H	H	...	H	H

L = Low Logic (Voltage) Level H = High Logic (Voltage) Level X = Irrelevant P = Present State R = Previous State

ELECTRICAL CHARACTERISTICS at T_A = +25°C, V_{DD} = 5 V (unless otherwise noted).

Characteristic	Symbol	Test Conditions	Limits			
			Min.	Typ.	Max.	Unit
Supply Voltage Range	V_{DD}	Operating	4.5	5.0	5.5	V
Undervoltage Lockout	$V_{DD(UV)}$	V_{DD} = 0 → 5 V	3.4	–	4.0	V
Output Current (any single output)	I_O	V_{CE} = 0.7 V, R_{EXT} = 250 Ω	64.2	75.5	86.8	mA
		V_{CE} = 0.7 V, R_{EXT} = 470 Ω	34.1	40.0	45.9	mA
Output Current Matching (difference between any two outputs at same V_{CE})	ΔI_O	0.4 V ≤ $V_{CE(A)}$ = $V_{CE(B)}$ ≤ 0.7 V:				
		R_{EXT} = 250 Ω	–	±1.5	±6.0	%
		R_{EXT} = 470 Ω	–	±1.5	±6.0	%
Output Leakage Current	I_{CEX}	V_{OH} = 15 V	–	1.0	5.0	µA
Logic Input Voltage	V_{IH}		0.7V_{DD}	–	V_{DD}	V
	V_{IL}		GND	–	0.3V_{DD}	V
SERIAL DATA OUT Voltage	V_{OL}	I_{OL} = 500 µA	–	–	0.4	V
	V_{OH}	I_{OH} = -500 µA	4.6	–	–	V
Input Resistance	R_I	ENABLE Input, Pull Up	150	300	600	kΩ
		LATCH Input, Pull Down	100	200	400	kΩ
Supply Current	$I_{DD(OFF)}$	R_{EXT} = open, V_{OE} = 5 V	–	0.8	1.4	mA
		R_{EXT} = 470 Ω, V_{OE} = 5 V	3.5	6.0	8.0	mA
		R_{EXT} = 250 Ω, V_{OE} = 5 V	6.5	11	15	mA
	$I_{DD(ON)}$	R_{EXT} = 470 Ω, V_{OE} = 0 V	5.0	10	14	mA
		R_{EXT} = 250 Ω, V_{OE} = 0 V	8.0	16	24	mA

Typical Data is at V_{DD} = 5 V and is for design information only.

SWITCHING CHARACTERISTICS at T_A = 25°C, V_{DD} = V_{IH} = 5 V, V_{CE} = 0.4 V, V_{IL} = 0 V, R_{EXT} = 470 Ω, I_O = 40 mA, V_L = 3 V, R_L = 65 Ω, C_L = 10.5 pF.

Characteristic	Symbol	Test Conditions	Limits			
			Min.	Typ.	Max.	Unit
Propagation Delay Time	t_{pHL}	CLOCK-OUT$_n$	–	350	1000	ns
		LATCH-OUT$_n$	–	350	1000	ns
		ENABLE-OUT$_n$	–	350	1000	ns
		CLOCK-SERIAL DATA OUT	–	40	–	ns
Propagation Delay Time	t_{pLH}	CLOCK-OUT$_n$	–	300	1000	ns
		LATCH-OUT$_n$	–	300	1000	ns
		ENABLE-OUT$_n$	–	300	1000	ns
		CLOCK-SERIAL DATA OUT	–	40	–	ns
Output Fall Time	t_f	90% to 10% voltage	150	350	1000	ns
Output Rise Time	t_r	10% to 90% voltage	150	300	600	ns

RECOMMENDED OPERATING CONDITIONS

Characteristic	Symbol	Conditions	Min.	Typ.	Max.	Unit
Supply Voltage	V_{DD}		4.5	5.0	5.5	V
Output Voltage	V_O		–	1.0	4.0	V
Output Current	I_O	Continuous, any one output	–	–	90	mA
	I_{OH}	SERIAL DATA OUT	–	–	-1.0	mA
	I_{OL}	SERIAL DATA OUT	–	–	1.0	mA
Logic Input Voltage	V_{IH}		$0.7V_{DD}$	–	V_{DD} + 0.3	V
	V_{IL}		-0.3	–	$0.3V_{DD}$	V
Clock Frequency	f_{CK}	Cascade operation	–	–	10	MHz

TIMING REQUIREMENTS and SPECIFICATIONS

(Logic Levels are V_{DD} and Ground)

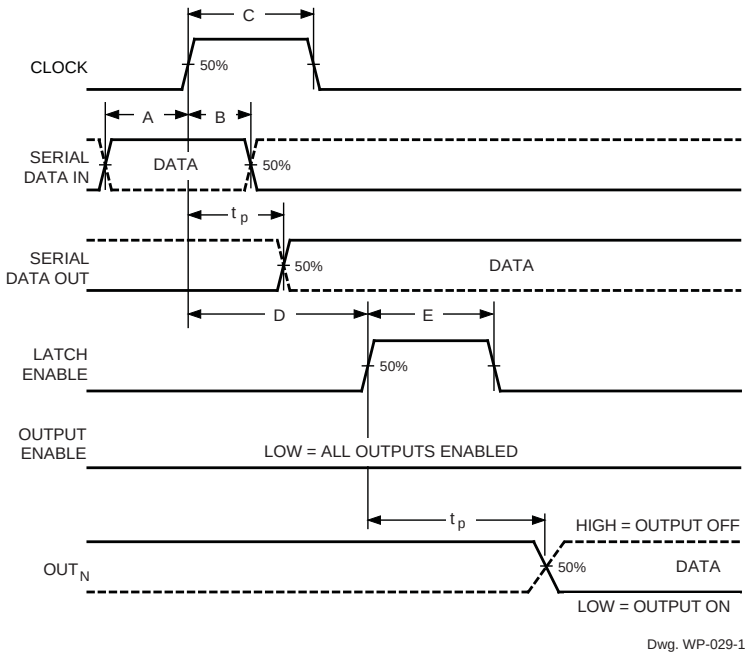

Dwg. WP-029-1

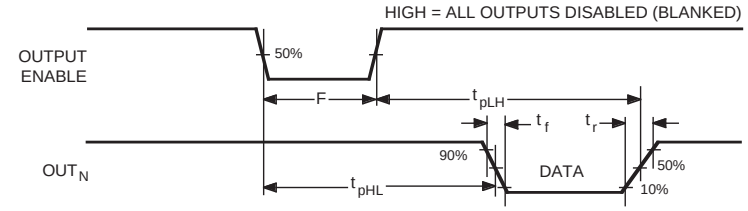

Dwg. WP-030-1A

A. Data Active Time Before Clock Pulse (Data Set-Up Time), $t_{su(D)}$ ..... **50 ns**
B. Data Active Time After Clock Pulse (Data Hold Time), $t_{h(D)}$ ..... **20 ns**
C. Clock Pulse Width, $t_{w(CK)}$ ..... **50 ns**
D. Time Between Clock Activation and Latch Enable, $t_{su(L)}$ ..... **100 ns**
E. Latch Enable Pulse Width, $t_{w(L)}$ ..... **100 ns**
F. Output Enable Pulse Width, $t_{w(OE)}$ ..... **4.5 µs**

NOTE: Timing is representative of a 10 MHz clock. Significantly higher speeds are attainable.

Max. Clock Transition Time, t_r or t_f ..... **10 µs**

Serial data present at the input is transferred to the shift register on the logic 0-to-logic 1 transition of the CLOCK input pulse. On succeeding CLOCK pulses, the registers shift data information towards the SERIAL DATA OUTPUT. The serial data must appear at the input prior to the rising edge of the CLOCK input waveform.

Information present at any register is transferred to the respective latch when the LATCH ENABLE is high (serial-to-parallel conversion). The latches continue to accept new data as long as the LATCH ENABLE is held high. Applications where the latches are bypassed (LATCH ENABLE tied high) will require that the OUTPUT ENABLE input be high during serial data entry.

When the OUTPUT ENABLE input is high, the output sink drivers are disabled (OFF). The information stored in the latches is not affected by the OUTPUT ENABLE input. With the OUTPUT ENABLE input low, the outputs are controlled by the state of their respective latches.

ALLOWABLE OUTPUT CURRENT AS A FUNCTION OF DUTY CYCLE

A Package

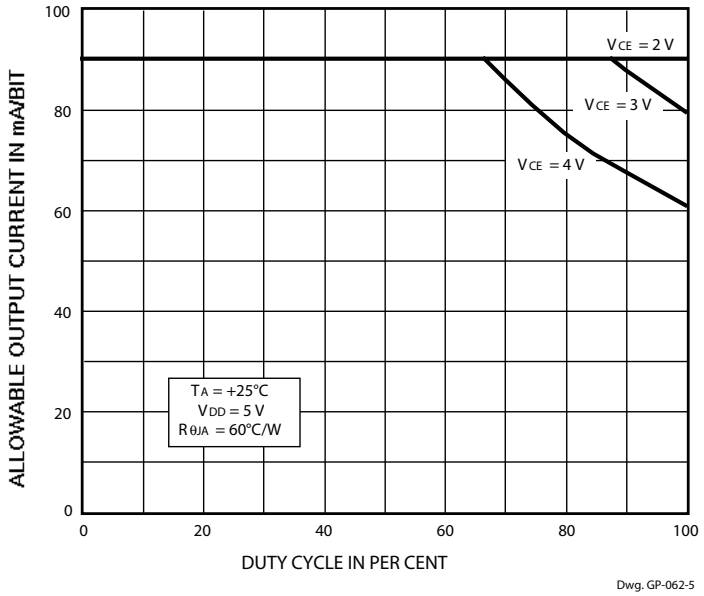

LW Package

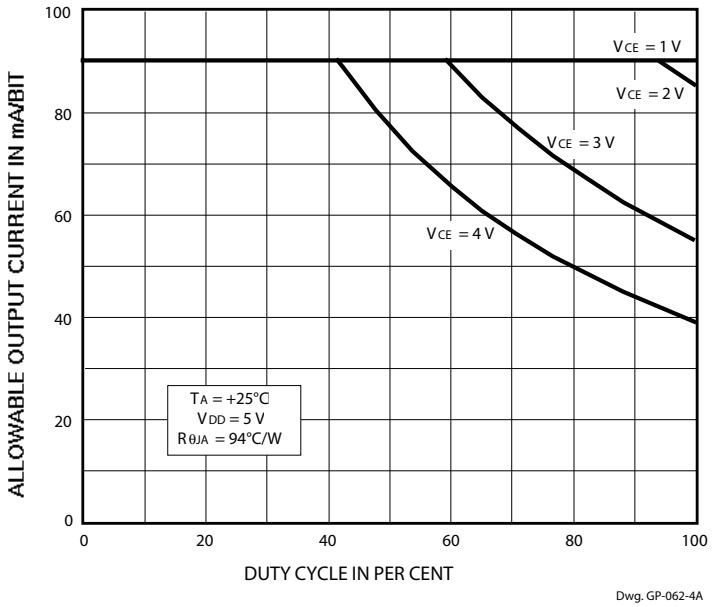

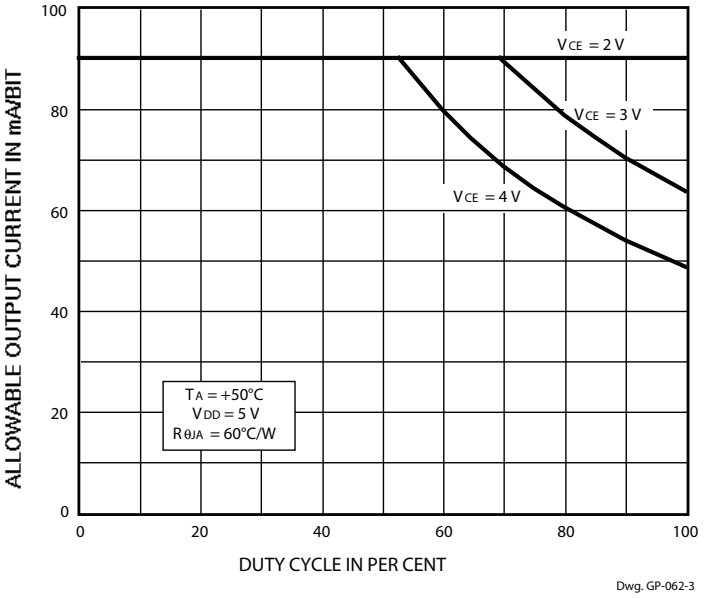

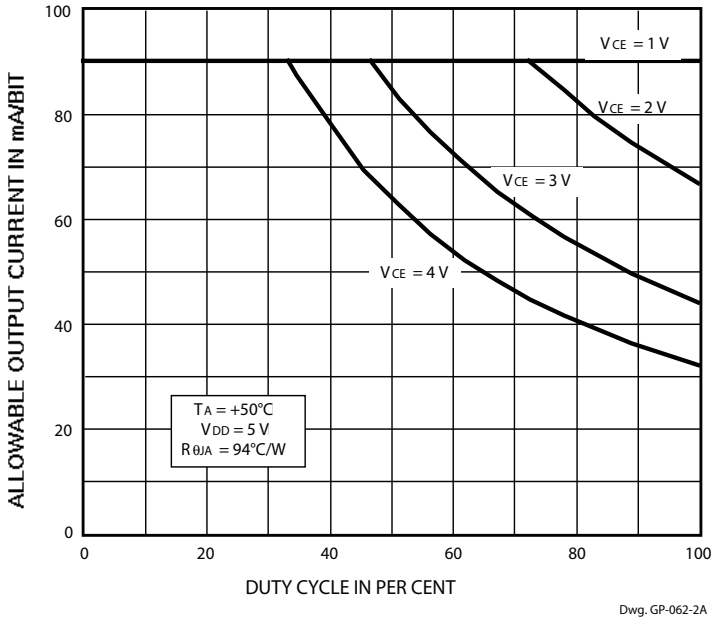

ALLOWABLE OUTPUT CURRENT AS A FUNCTION OF DUTY CYCLE (cont.)

A Package

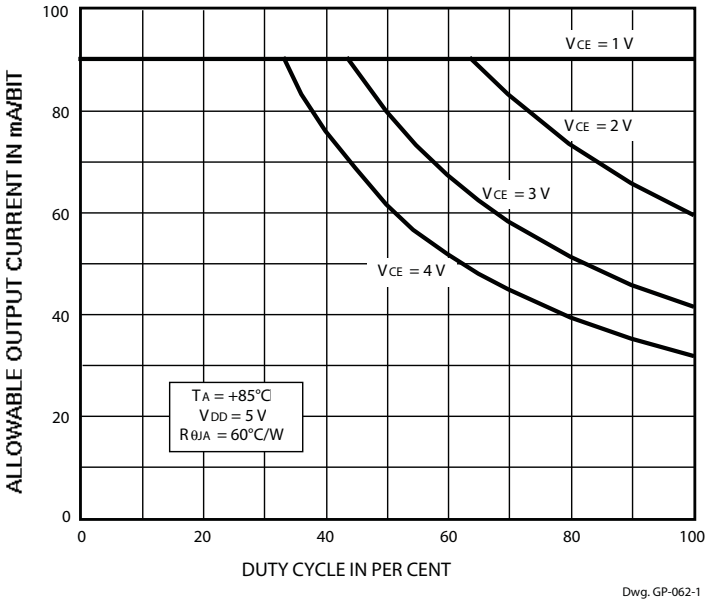

LW Package

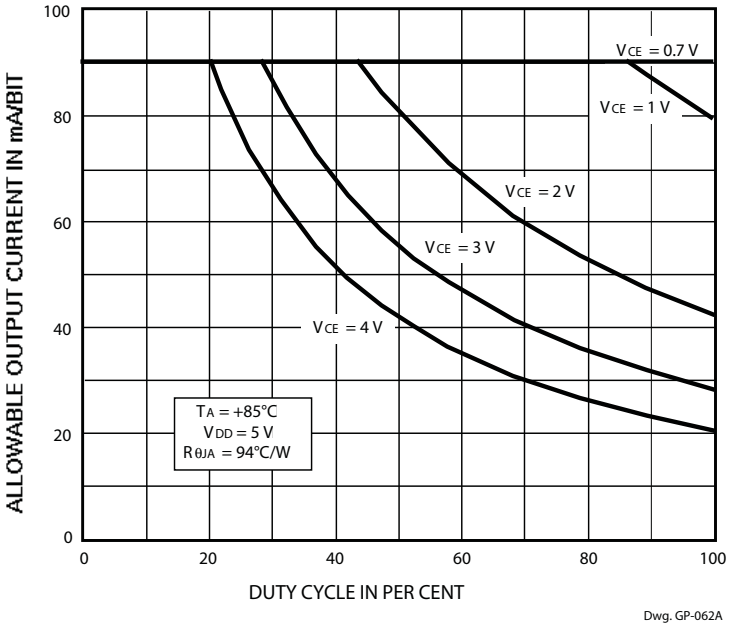

TYPICAL CHARACTERISTICS

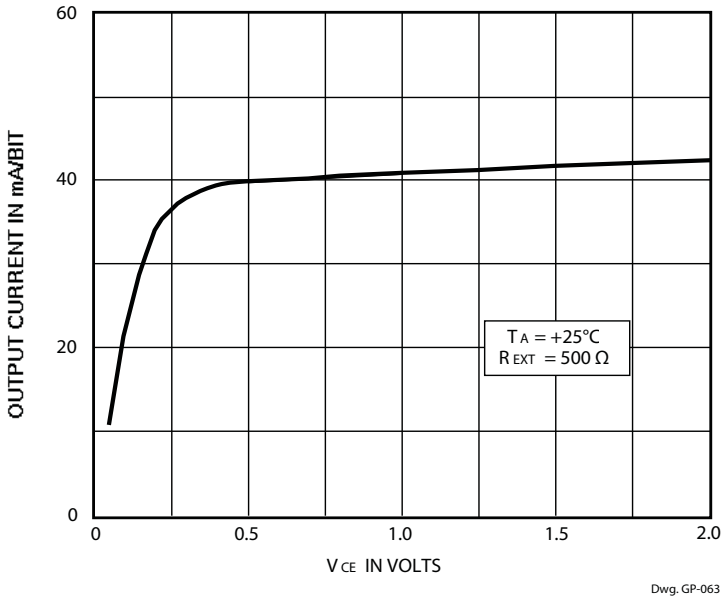

Pin-out Diagrams

Package A

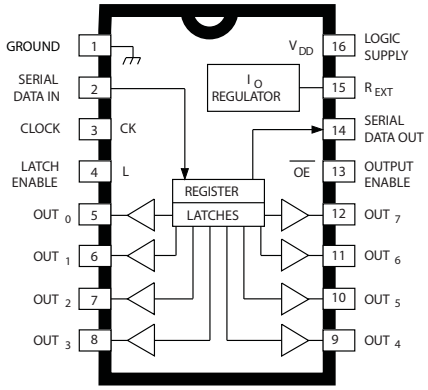

Package LW

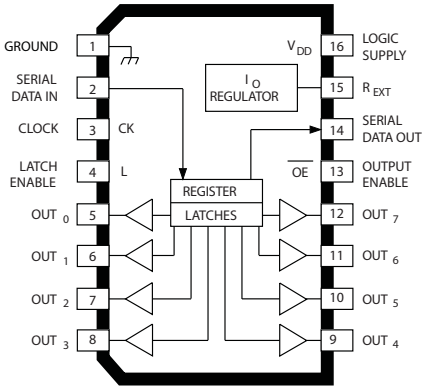

TERMINAL DESCRIPTION

Terminal No.	Terminal Name	Function
1	GND	Reference terminal for control logic.
2	SERIAL DATA IN	Serial-data input to the shift-register.
3	CLOCK	Clock input terminal for data shift on rising edge.
4	LATCH ENABLE	Data strobe input terminal; serial data is latched with high-level input.
5-12	OUT_{0-7}	The eight current-sinking output terminals.
13	OUTPUT ENABLE	When (active) low, the output drivers are enabled; when high, all output drivers are turned OFF (blanked).
14	SERIAL DATA OUT	CMOS serial-data output to the following shift-register.
15	R_{EXT}	An external resistor at this terminal establishes the output current for all sink drivers.
16	SUPPLY	(V_{DD}) The logic supply voltage (typically 5 V).

Applications Information

The load current per bit (I_O) is set by the external resistor (R_{EXT}) as shown in the figure below.

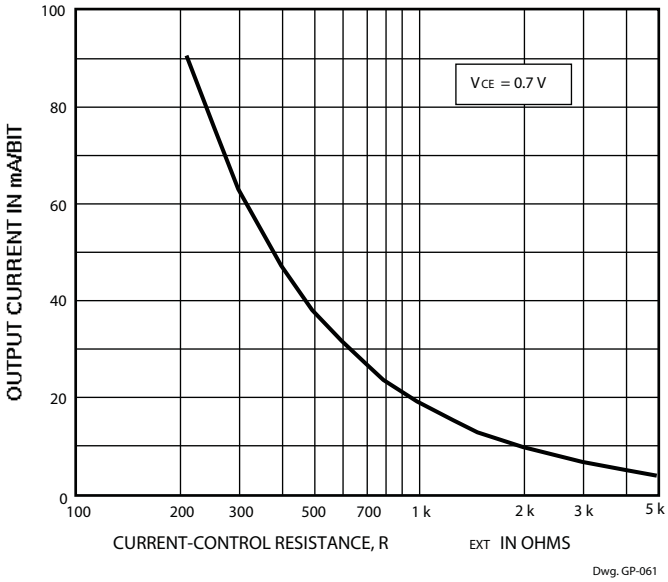

Package Power Dissipation (P_D). The maximum allowable package power dissipation is determined as

$$P_D(max) = (150 - T_A)/R_{\theta JA}.$$

The actual package power dissipation is

$$P_D(act) = dc(V_{CE} \times I_O \times 8) + (V_{DD} \times I_{DD}).$$

When the load supply voltage is greater than 3 V to 5 V, considering the package power dissipating limits of these devices, or if $P_D(act) > P_D(max)$, an external voltage reducer (V_{DROP}) should be used.

Load Supply Voltage (V_{LED}). These devices are designed to operate with driver voltage drops (V_{CE}) of 0.4 V to 0.7 V with LED forward voltages (V_F) of 1.2 V to 4.0 V. If higher voltages are dropped across the driver, package power dissipation will be increased significantly. To minimize package power dissipation, it is recommended to use the lowest possible load supply voltage or to set any series dropping voltage (V_{DROP}) as

$$V_{DROP} = V_{LED} - V_F - V_{CE}$$

with $V_{DROP} = I_o \times R_{DROP}$ for a single driver, or a Zener diode (V_Z), or a series string of diodes (approximately 0.7 V per diode) for a group of drivers. If the available voltage source will cause unacceptable dissipation and series resistors or diode(s) are undesirable, a regulator such as the Sanken Series SAI or Series SI can be used to provide supply voltages as low as 3.3 V.

For reference, typical LED forward voltages are:

White	3.5 – 4.0 V
Blue	3.0 – 4.0 V
Green	1.8 – 2.2 V
Yellow	2.0 – 2.1 V
Amber	1.9 – 2.65 V
Red	1.6 – 2.25 V
Infrared	1.2 – 1.5 V

Pattern Layout. This device has a common logic-ground and power-ground terminal. If ground pattern layout contains large common-mode resistance, and the voltage between the system ground and the LATCH ENABLE or CLOCK terminals exceeds 2.5 V (because of switching noise), these devices may not operate correctly.

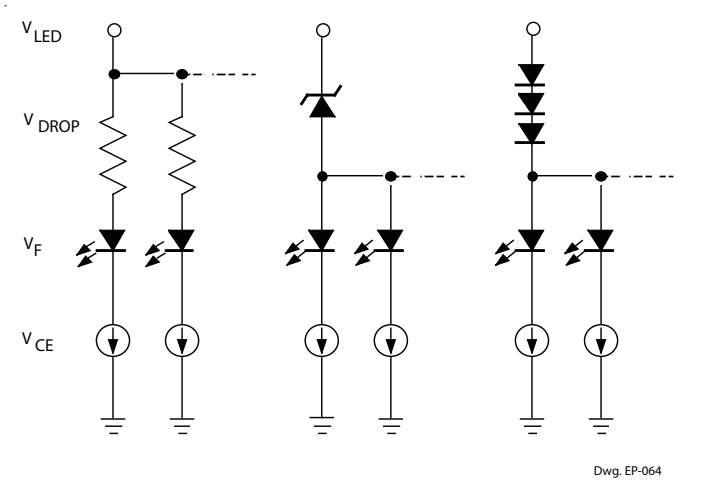

Package A 16-Pin DIP

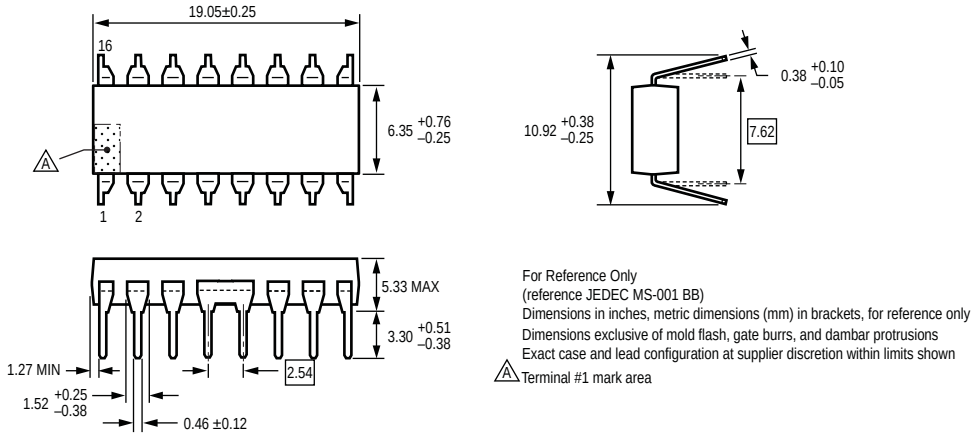

For Reference Only
(reference JEDEC MS-001 BB)
Dimensions in inches, metric dimensions (mm) in brackets, for reference only
Dimensions exclusive of mold flash, gate burrs, and dambar protrusions
Exact case and lead configuration at supplier discretion within limits shown

A Terminal #1 mark area

Package LW 16-Pin SOICW

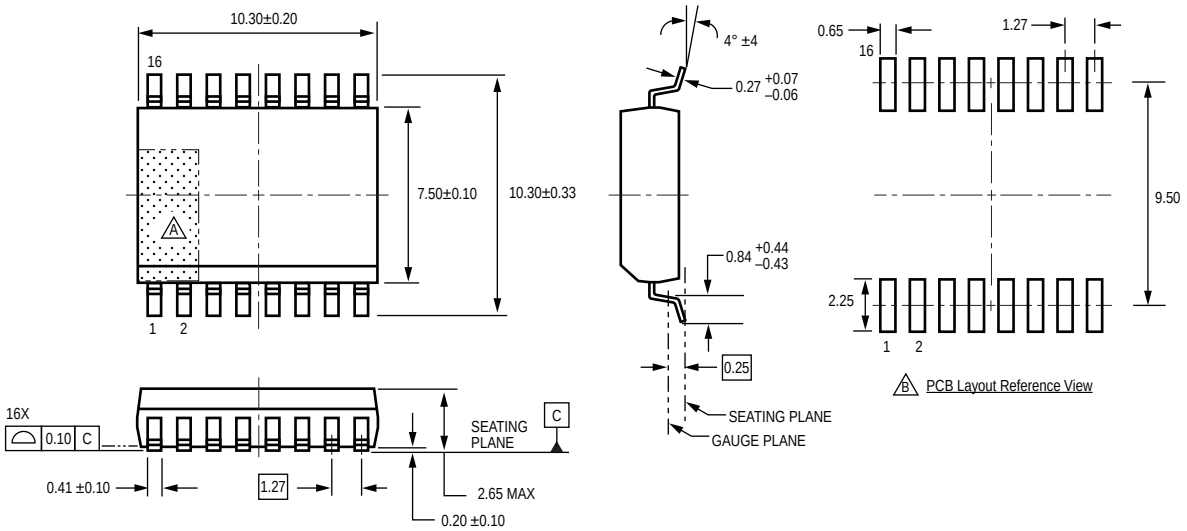

For Reference Only
Dimensions in millimeters
(reference JEDEC MS-013 AA)
Dimensions exclusive of mold flash, gate burrs, and dambar protrusions
Exact case and lead configuration at supplier discretion within limits shown

A Terminal #1 mark area

B Reference pad layout (reference IPC SOIC127P1030X265-16M)
All pads a minimum of 0.20 mm from all adjacent pads; adjust as necessary to meet application process requirements and PCB layout tolerances

Copyright ©2000-2008, Allegro MicroSystems, Inc.

The products described here are manufactured under one or more U.S. patents or U.S. patents pending.

Allegro MicroSystems, Inc. reserves the right to make, from time to time, such departures from the detail specifications as may be required to permit improvements in the performance, reliability, or manufacturability of its products. Before placing an order, the user is cautioned to verify that the information being relied upon is current.

Allegro's products are not to be used in life support devices or systems, if a failure of an Allegro product can reasonably be expected to cause the failure of that life support device or system, or to affect the safety or effectiveness of that device or system.

The information included herein is believed to be accurate and reliable. However, Allegro MicroSystems, Inc. assumes no responsibility for its use; nor for any infringement of patents or other rights of third parties which may result from its use.

For the latest version of this document, visit our website:
www.allegromicro.com

Компания «ЭлектроПласт» предлагает заключение долгосрочных отношений при поставках импортных электронных компонентов на взаимовыгодных условиях!

Наши преимущества:

- Оперативные поставки широкого спектра электронных компонентов отечественного и импортного производства напрямую от производителей и с крупнейших мировых складов;
- Поставка более 17-ти миллионов наименований электронных компонентов;
- Поставка сложных, дефицитных, либо снятых с производства позиций;
- Оперативные сроки поставки под заказ (от 5 рабочих дней);
- Экспресс доставка в любую точку России;
- Техническая поддержка проекта, помощь в подборе аналогов, поставка прототипов;
- Система менеджмента качества сертифицирована по Международному стандарту ISO 9001;
- Лицензия ФСБ на осуществление работ с использованием сведений, составляющих государственную тайну;
- Поставка специализированных компонентов (Xilinx, Altera, Analog Devices, Intersil, Interpoint, Microsemi, Aeroflex, Peregrine, Syfer, Eurofarad, Texas Instrument, Miteq, Cobham, E2V, MA-COM, Hittite, Mini-Circuits,General Dynamics и др.);

Помимо этого, одним из направлений компании «ЭлектроПласт» является направление «Источники питания». Мы предлагаем Вам помощь Конструкторского отдела:

- Подбор оптимального решения, техническое обоснование при выборе компонента;
- Подбор аналогов;
- Консультации по применению компонента;
- Поставка образцов и прототипов;
- Техническая поддержка проекта;
- Защита от снятия компонента с производства.

Как с нами связаться

Телефон: 8 (812) 309 58 32 (многоканальный)
Факс: 8 (812) 320-02-42
Электронная почта: org@eplast1.ru
Адрес: 198099, г. Санкт-Петербург, ул. Калинина, дом 2, корпус 4, литера А.