Precision Thermocouple Amplifiers with Cold Junction Compensation

AD8494/AD8495/AD8496/AD8497

FEATURES

- Low cost and easy to use
- Pretrimmed for J or K type thermocouples
- Internal cold junction compensation
- High impedance differential input
- Standalone 5 mV/°C thermometer
- Reference pin allows offset adjustment
- Thermocouple break detection
- Laser wafer trimmed to 1°C initial accuracy and
  - 0.025°C/°C ambient temperature rejection
- Low power: <1 mW at V_S = 5 V
- Wide power supply range
  - Single supply: 2.7 V to 36 V
  - Dual supply: ±2.7 V to ±18 V
- Small, 8-lead MSOP

APPLICATIONS

- J or K type thermocouple temperature measurement
- Setpoint controller
- Celsius thermometer
- Universal cold junction compensator
- White goods (oven, stove top) temperature measurements
- Exhaust gas temperature sensing
- Catalytic converter temperature sensing

GENERAL DESCRIPTION

The AD8494/AD8495/AD8496/AD8497 are precision instrumentation amplifiers with thermocouple cold junction compensators on an integrated circuit. They produce a high level (5 mV/°C) output directly from a thermocouple signal by combining an ice point reference with a precalibrated amplifier. They can be used as standalone thermometers or as switched output setpoint controllers using either a fixed or remote setpoint control.

The AD8494/AD8495/AD8496/AD8497 can be powered from a single-ended supply (less than 3 V) and can measure temperatures below 0°C by offsetting the reference input. To minimize self-heating, an unloaded AD849x typically operates with a total supply current of 180 µA, but it is also capable of delivering in excess of ±5 mA to a load.

The AD8494 and AD8496 are precalibrated by laser wafer trimming to match the characteristics of J type (iron-constantan) thermocouples; the AD8495 and AD8497 are laser trimmed to match the characteristics of K type (chromel-alumel) thermocouples. See Table 1 for the optimized ambient temperature range of each part.

FUNCTIONAL BLOCK DIAGRAM

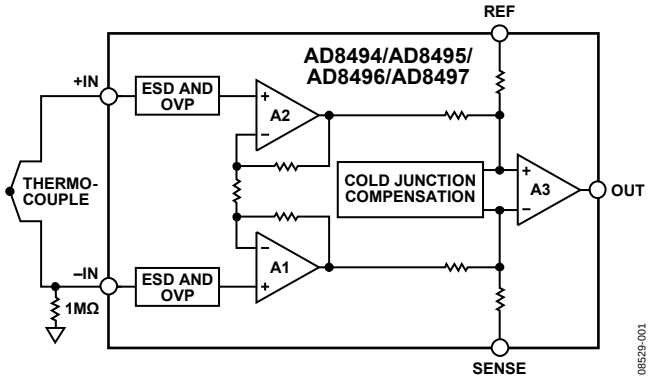

Figure 1.

Table 1. Device Temperature Ranges

Part No.	Thermo-Couple Type	Optimized Temperature Range	
		Ambient Temperature (Reference Junction)	Measurement Junction
AD8494	J	0°C to 50°C	Full J type range
AD8495	K	0°C to 50°C	Full K type range
AD8496	J	25°C to 100°C	Full J type range
AD8497	K	25°C to 100°C	Full K type range

The AD8494/AD8495/AD8496/AD8497 allow a wide variety of supply voltages. With a 5 V single supply, the 5 mV/°C output allows the devices to cover nearly 1000 degrees of a thermocouple's temperature range.

The AD8494/AD8495/AD8496/AD8497 work with 3 V supplies, allowing them to interface directly to lower supply ADCs. They can also work with supplies as large as 36 V in industrial systems that require a wide common-mode input range.

PRODUCT HIGHLIGHTS

1. Complete, precision laser wafer trimmed thermocouple signal conditioning system in a single IC package.
2. Flexible pinout provides for operation as a setpoint controller or as a standalone Celsius thermometer.
3. Rugged inputs withstand 4 kV ESD and provide overvoltage protection (OVP) up to V_S ± 25 V.
4. Differential inputs reject common-mode noise on the thermocouple leads.
5. Reference pin voltage can be offset to measure 0°C on single supplies.
6. Available in a small, 8-lead MSOP that is fully RoHS compliant.

Rev. C
Information furnished by Analog Devices is believed to be accurate and reliable. However, no responsibility is assumed by Analog Devices for its use, nor for any infringements of patents or other rights of third parties that may result from its use. Specifications subject to change without notice. No license is granted by implication or otherwise under any patent or patent rights of Analog Devices. Trademarks and registered trademarks are the property of their respective owners.

One Technology Way, P.O. Box 9106, Norwood, MA 02062-9106, U.S.A.
Tel: 781.329.4700 **www.analog.com**
Fax: 781.461.3113 **©2010–2011 Analog Devices, Inc. All rights reserved.**

TABLE OF CONTENTS

Features ... 1
Applications ... 1
Functional Block Diagram ... 1
General Description ... 1
Product Highlights ... 1
Revision History ... 2
Specifications ... 3
Absolute Maximum Ratings ... 5
Thermal Resistance ... 5
ESD Caution ... 5
Pin Configuration and Function Descriptions ... 6
Typical Performance Characteristics ... 7
Theory of Operation ... 11
Thermocouples ... 11
Thermocouple Signal Conditioner ... 11
AD8494/AD8495/AD8496/AD8497 Architecture ... 11
Maximum Error Calculation ... 12
Recommendations for Best Circuit Performance ... 13
Applications Information ... 14
Basic Connection ... 14
Ambient Temperature Sensor ... 14
Setpoint Controller ... 15
Measuring Negative Temperatures ... 15
Reference Pin Allows Offset Adjustment ... 15
Outline Dimensions ... 16
Ordering Guide ... 16

REVISION HISTORY

6/11—Rev. B to Rev. C

Changes to Figure 35 and Figure 36 ... 15

4/11—Rev. A to Rev. B

Changes to Figure 1 ... 1
Changes to Figure 33 and Figure 34 ... 14
Changes to Figure 35 and Figure 36 ... 15
Changes to Ordering Guide ... 16

10/10—Rev. 0 to Rev. A

Changes to Linearity Error of the Thermocouple Section ... 12
Changes to Ambient Temperature Sensor Section ... 14
Changes to Ordering Guide ... 16

7/10—Revision 0: Initial Version

SPECIFICATIONS

$+V_S$ = 5 V, $-V_S$ = 0 V, $V_{+IN} = V_{-IN}$ = 0 V, V_{REF} = 0 V, $T_A = T_{RJ}$ = 25°C, R_L = 100 kΩ, unless otherwise noted. Specifications do not include gain and offset errors of the thermocouple itself. T_A is the ambient temperature at the AD849x; T_{RJ} is the thermocouple reference junction temperature; T_{MJ} is the thermocouple measurement junction temperature.

Table 2.

		A Grade			C Grade			
Parameter	**Test Conditions/Comments**	**Min**	**Typ**	**Max**	**Min**	**Typ**	**Max**	**Unit**
TEMPERATURE ACCURACY								
Initial Accuracy								
AD8494/AD8495	$T_A = T_{RJ} = T_{MJ}$ = 25°C			3			1	°C
AD8496/AD8497	$T_A = T_{RJ}$ = 60°C, T_{MJ} = 175°C			3			1.5	°C
Ambient Temperature Rejection[1]								
AD8494/AD8495	$T_A = T_{RJ}$ = 0°C to 50°C			0.05			0.025	°C/°C
AD8496/AD8497	$T_A = T_{RJ}$ = 25°C to 100°C			0.05			0.025	°C/°C
Gain Error[2, 3]	V_{OUT} = 0.125 V to 4.125 V							
AD8494/AD8495				0.3			0.1	%
AD8496/AD8497				0.3			0.1	%
Transfer Function			5			5		mV/°C
INPUTS								
Input Voltage Range		$-V_S$ – 0.2		$+V_S$ – 1.6	$-V_S$ – 0.2		$+V_S$ – 1.6	V
Overvoltage Range		$+V_S$ – 25		$-V_S$ + 25	$+V_S$ – 25		$-V_S$ + 25	V
Input Bias Current[4]			25	50		25	50	nA
Input Offset Current				1.5			0.5	nA
Common-Mode Rejection	V_{CM} = 0 V to 3 V			1			0.3	°C/V
Power Supply Rejection	$+V_S$ = 2.7 V to 5 V			0.5			0.5	°C/V
NOISE								
Voltage Noise	f = 0.1 Hz to 10 Hz, T_A = 25°C		0.8			0.8		µV p-p
Voltage Noise Density	f = 1 kHz, T_A = 25°C		32			32		nV/√Hz
Current Noise Density	f = 1 kHz, T_A = 25°C		100			100		fA/√Hz
REFERENCE INPUT								
Input Resistance			60			60		kΩ
Input Current			25			25		µA
Voltage Range		$-V_S$		$+V_S$	$-V_S$		$+V_S$	V
Gain to Output			1			1		V/V
OUTPUT								
Output Voltage Range		$-V_S$ + 0.025		$+V_S$ – 0.1	$-V_S$ + 0.025		$+V_S$ – 0.1	V
Short-Circuit Current[5]			7			7		mA
DYNAMIC RESPONSE								
–3 dB Bandwidth								
AD8494			30			30		kHz
AD8495/AD8497			25			25		kHz
AD8496			31			31		kHz
Settling Time to 0.1%	4 V output step							
AD8494			36			36		µs
AD8495/AD8497			40			40		µs
AD8496			32			32		µs
POWER SUPPLY								
Operating Voltage Range[6]								
Single Supply		2.7		36	2.7		36	V
Dual Supply		±2.7		±18	±2.7		±18	V
Quiescent Current			180	250		180	250	µA

Parameter	Test Conditions/Comments	A Grade			C Grade			Unit
		Min	Typ	Max	Min	Typ	Max	
TEMPERATURE RANGE (T_A)								
Specified Performance								
AD8494/AD8495		0		50	0		50	°C
AD8496/AD8497		25		100	25		100	°C
Operational		−40		+125	−40		+125	°C

[1] Ambient temperature rejection specifies the change in the output measurement (in °C) for a given change in temperature of the cold junction. For the AD8494 and AD8495, ambient temperature rejection is defined as the slope of the line connecting errors calculated at 0°C and 50°C ambient temperature. For the AD8496 and AD8497, ambient temperature rejection is defined as the slope of the line connecting errors calculated at 25°C and 100°C ambient temperature.
[2] Error does not include thermocouple gain error or thermocouple nonlinearity.
[3] With a 100 kΩ load, measurement junction temperatures beyond approximately 880°C for the AD8494 and AD8496 and beyond approximately 960°C for the AD8495 and AD8497 require supply voltages larger than 5 V or a negative voltage applied to the reference pin. Measurement junction temperatures below 5°C require either a positive offset voltage applied to the reference pin or a negative supply.
[4] Input stage uses PNP transistors, so bias current always flows out of the part.
[5] Large output currents can increase the internal temperature rise of the part and contribute to cold junction compensation (CJC) error.
[6] Unbalanced supplies can also be used. Care should be taken that the common-mode voltage of the thermocouple stays within the input voltage range of the part.

ABSOLUTE MAXIMUM RATINGS

Table 3.

Parameter	Rating
Supply Voltage	±18 V
Maximum Voltage at −IN or +IN	$+V_S$ − 25 V
Minimum Voltage at −IN or +IN	$-V_S$ + 25 V
REF Voltage	$\pm V_S$
Output Short-Circuit Current Duration	Indefinite
Storage Temperature Range	−65°C to +150°C
Operating Temperature Range	−40°C to +125°C
Maximum IC Junction Temperature	140°C
ESD	
Human Body Model	4.5 kV
Field-Induced Charged Device Model	1.5 kV

Stresses above those listed under Absolute Maximum Ratings may cause permanent damage to the device. This is a stress rating only; functional operation of the device at these or any other conditions above those indicated in the operational section of this specification is not implied. Exposure to absolute maximum rating conditions for extended periods may affect device reliability.

THERMAL RESISTANCE

θ_{JA} is specified for a device on a 4-layer JEDEC PCB in free air.

Table 4.

Package	θ_{JA}	Unit
8-Lead MSOP (RM-8)	135	°C/W

ESD CAUTION

ESD (electrostatic discharge) sensitive device. Charged devices and circuit boards can discharge without detection. Although this product features patented or proprietary protection circuitry, damage may occur on devices subjected to high energy ESD. Therefore, proper ESD precautions should be taken to avoid performance degradation or loss of functionality.

PIN CONFIGURATION AND FUNCTION DESCRIPTIONS

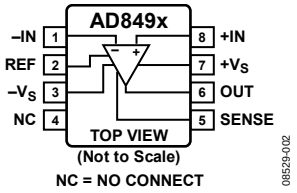

Figure 2. Pin Configuration

Table 5. Pin Function Descriptions

Pin No.	Mnemonic	Description
1	−IN	Negative Input.
2	REF	Reference. This pin must be driven by low impedance.
3	$-V_S$	Negative Supply.
4	NC	No Connect.
5	SENSE	Sense Pin. In measurement mode, connect to output; in setpoint mode, connect to setpoint voltage.
6	OUT	Output.
7	$+V_S$	Positive Supply.
8	+IN	Positive Input.

TYPICAL PERFORMANCE CHARACTERISTICS

T_A = 25°C, $+V_S$ = 5 V, R_L = ∞, unless otherwise noted.

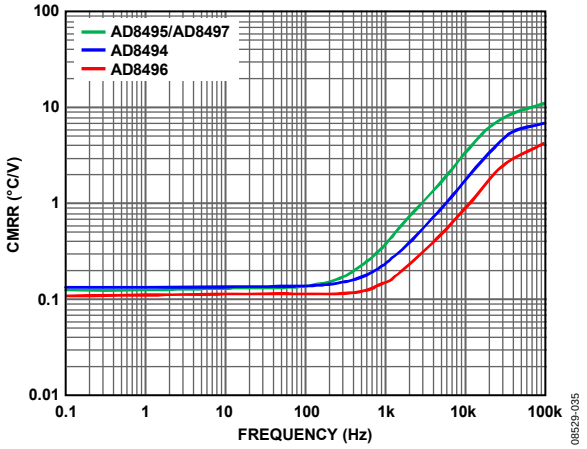

Figure 3. CMRR vs. Frequency

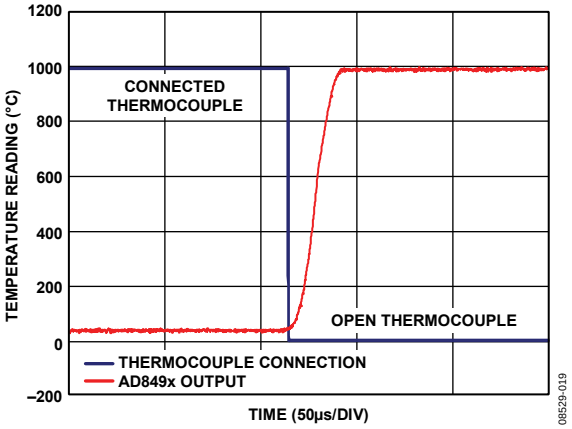

Figure 6. Output Response to Open Thermocouple, –IN Connected to Ground Through a 1 MΩ Resistor

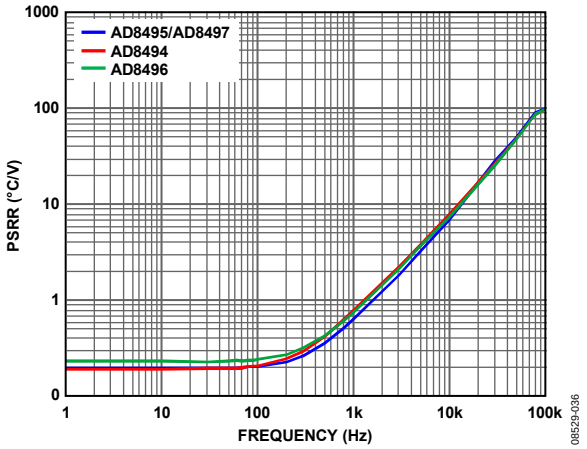

Figure 4. PSRR vs. Frequency

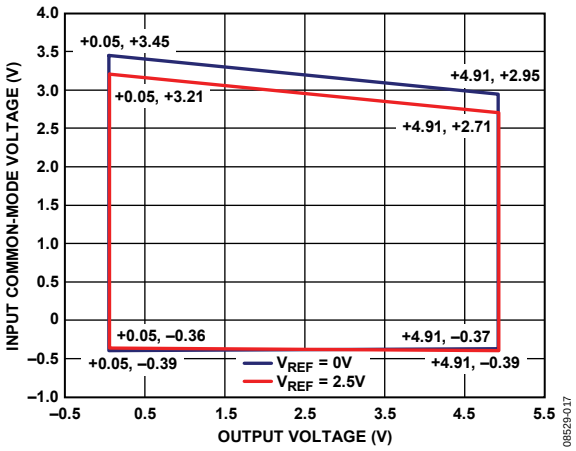

Figure 7. Input Common-Mode Voltage Range vs. Output Voltage, $+V_S$ = 5 V, V_{REF} = 0 V, and V_{REF} = 2.5 V

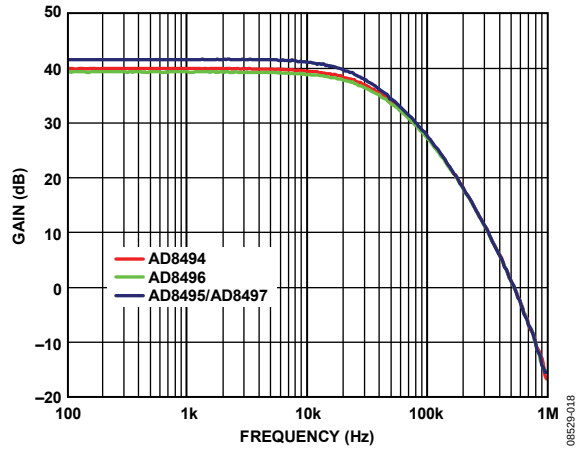

Figure 5. Frequency Response

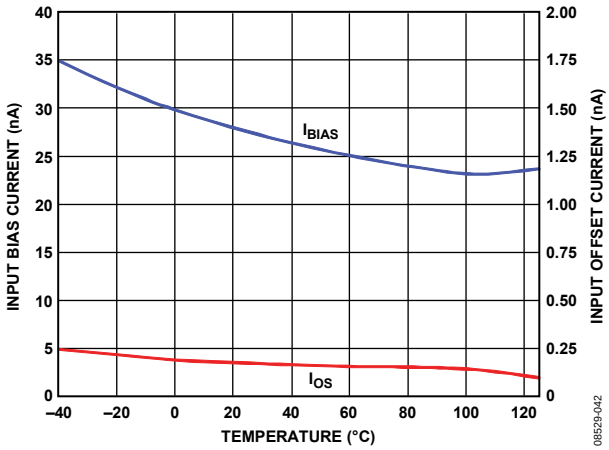

Figure 8. Input Bias Current and Input Offset Current vs. Temperature

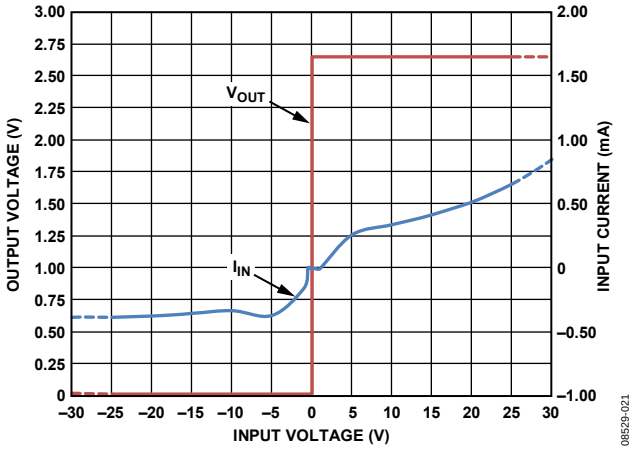

Figure 9. AD8494 Input Overvoltage Performance, $+V_S$ = 2.7 V (Gain = 96.7)

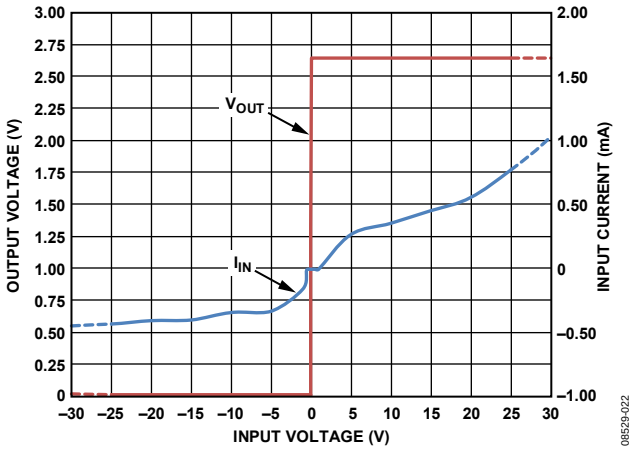

Figure 10. AD8495/AD8497 Input Overvoltage Performance, $+V_S$ = 2.7 V (Gain = 122.4)

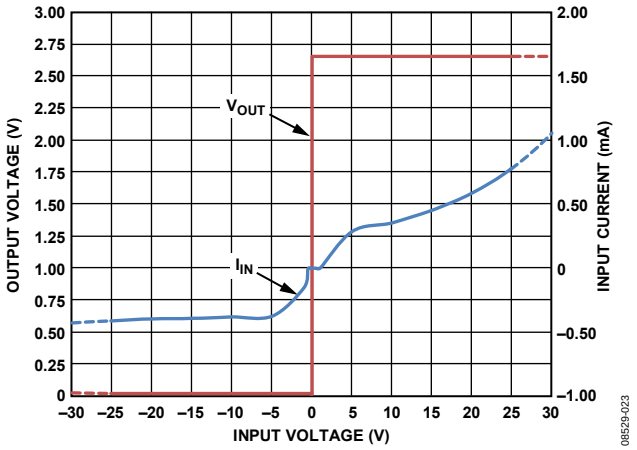

Figure 11. AD8496 Input Overvoltage Performance, $+V_S$ = 2.7 V Gain = 90.35)

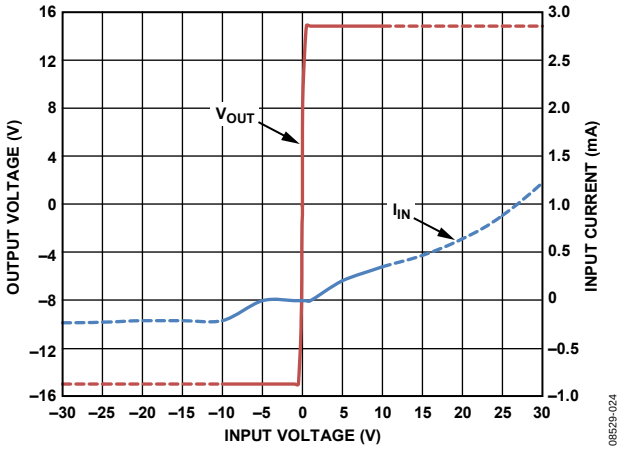

Figure 12. AD8494 Input Overvoltage Performance, V_S = ±15 V (Gain = 96.7)

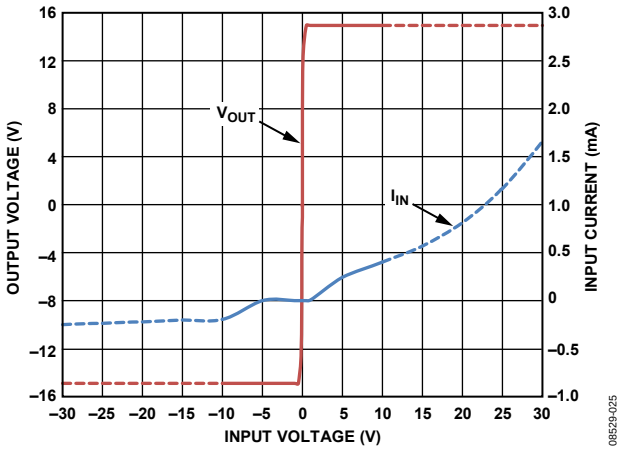

Figure 13. AD8495/AD8497 Input Overvoltage Performance, V_S = ±15 V (Gain = 122.4)

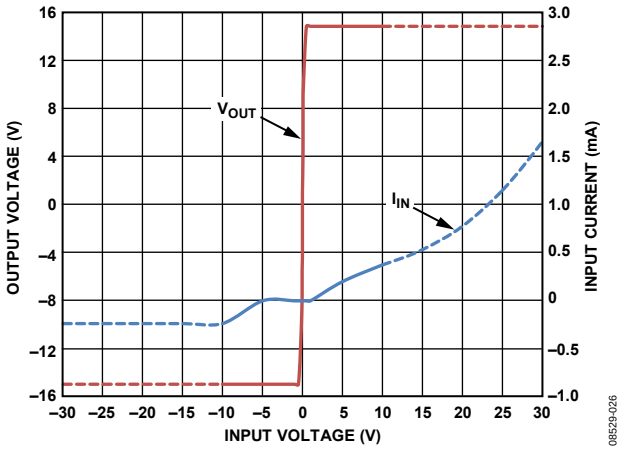

Figure 14. AD8496 Input Overvoltage Performance, V_S = ±15 V (Gain = 90.35)

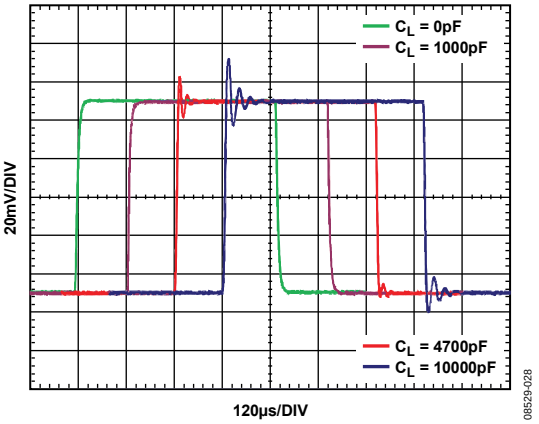

Figure 15. AD8494/AD8496 Small-Signal Response with Various Capacitive Loads

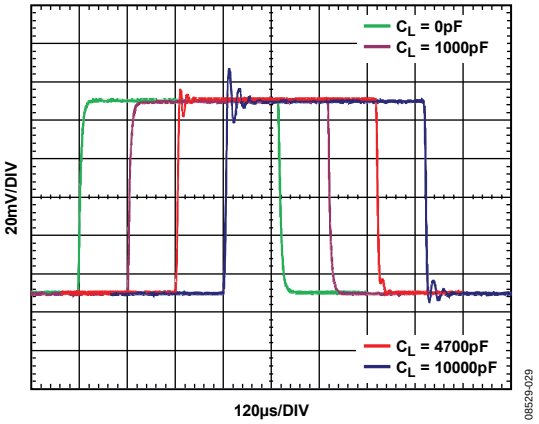

Figure 18. AD8495/AD8497 Small-Signal Response with Various Capacitive Loads

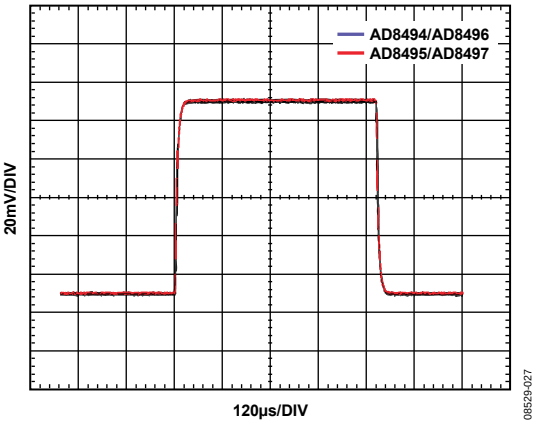

Figure 16. Small-Signal Response, R_L = 100 kΩ, C_L = 1 nF

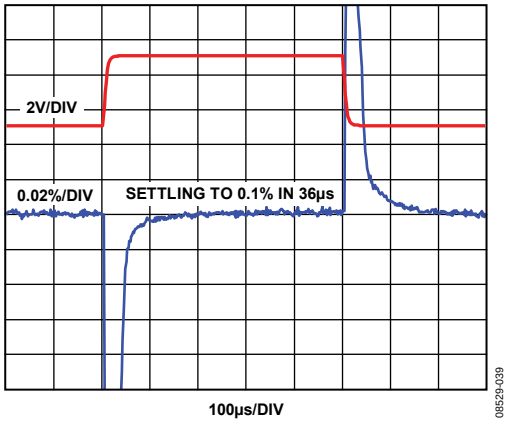

Figure 19. AD8494 Large-Signal Step Response and Settling Time

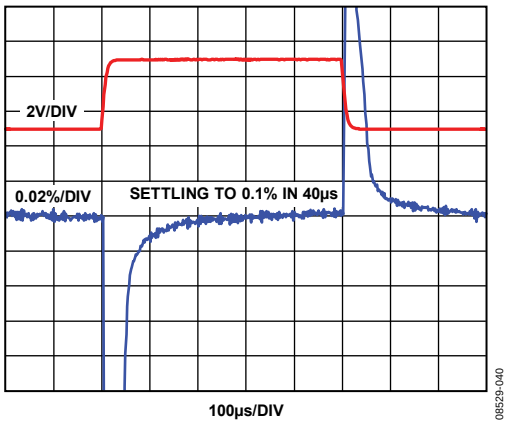

Figure 17. AD8495/AD8497 Large-Signal Step Response and Settling Time

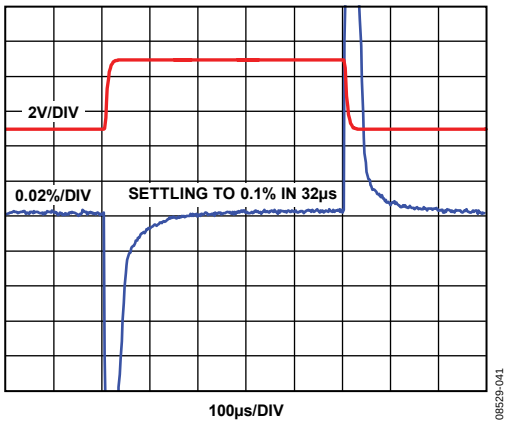

Figure 20. AD8496 Large-Signal Step Response and Settling Time

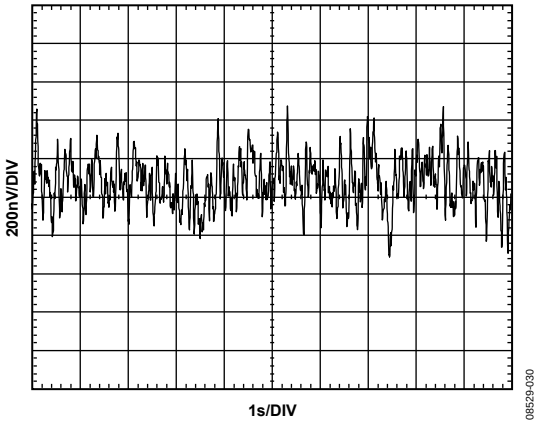

Figure 21. 0.1 Hz to 10 Hz RTI Voltage Noise

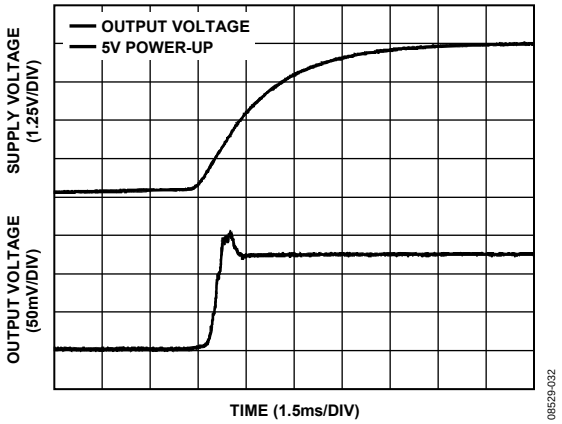

Figure 24. Output Voltage Start-Up

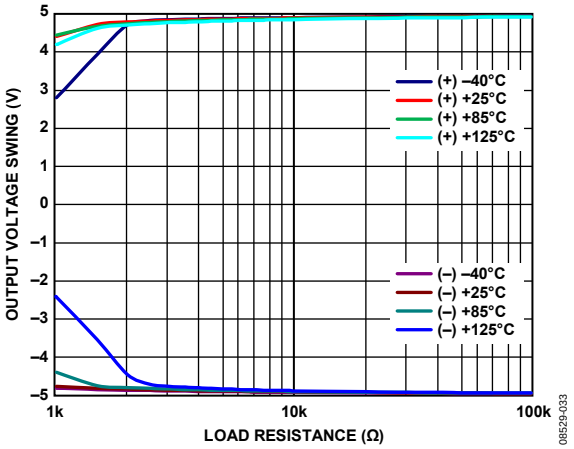

Figure 22. Output Voltage Swing vs. Load Resistance, V_S = ±5 V

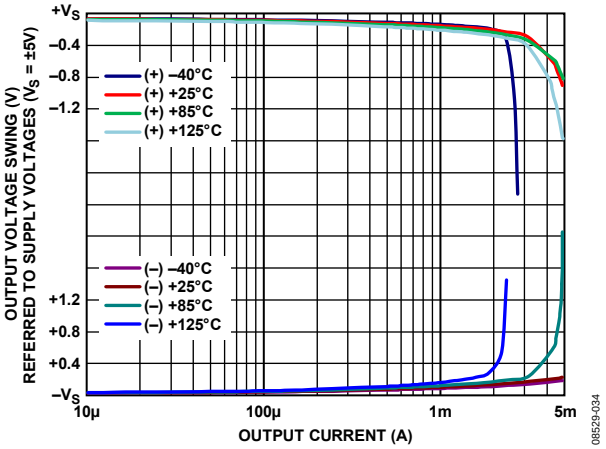

Figure 25. Output Voltage Swing vs. Output Current, V_S = ±5 V

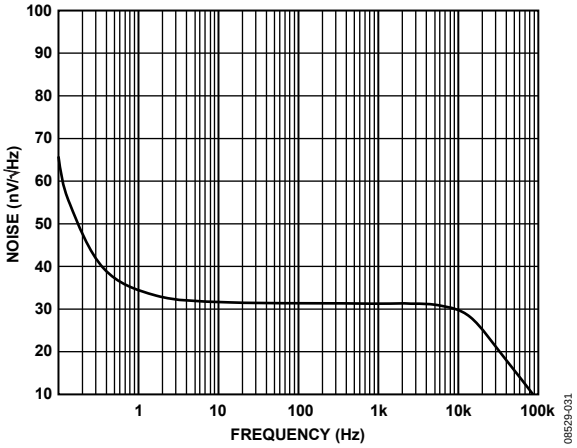

Figure 23. Voltage Noise Spectral Density vs. Frequency

THEORY OF OPERATION

THERMOCOUPLES

A thermocouple is a rugged, low cost temperature transducer whose output is proportional to the temperature difference between a measurement junction and a reference junction. It has a very wide temperature range. Its low level output (typically tens of microvolts per °C) requires amplification. Variation in the reference junction temperature results in measurement error unless the thermocouple signal is properly compensated.

A thermocouple consists of two dissimilar metals. These metals are connected at one end to form the measurement junction, also called the hot junction. The other end of the thermocouple is connected to the metal lines that lead to the measurement electronics. This connection forms a second junction: the reference junction, also called the cold junction.

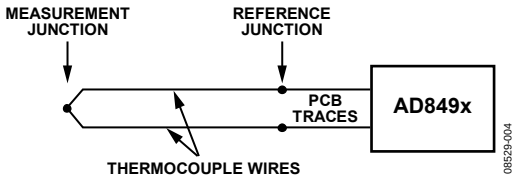

Figure 26. Thermocouple Junctions

To derive the temperature at the measurement junction (T_{MJ}), the user must know the differential voltage created by the thermocouple. The user must also know the error voltage generated by the temperature at the reference junction (T_{RJ}). Compensating for the reference junction error voltage is typically called cold junction compensation. The electronics must compensate for any changes in temperature at the reference (cold) junction so that the output voltage is an accurate representation of the hot junction measurement.

THERMOCOUPLE SIGNAL CONDITIONER

The AD8494/AD8495/AD8496/AD8497 thermocouple amplifiers provide a simple, low cost solution for measuring thermocouple temperatures. These amplifiers simplify many of the difficulties of measuring thermocouples. An integrated temperature sensor performs cold junction compensation. A fixed-gain instrumentation amplifier amplifies the small thermocouple voltage to provide a 5 mV/°C output. The high common-mode rejection of the amplifier blocks common-mode noise that the long thermocouple leads can pick up. For additional protection, the high impedance inputs of the amplifier make it easy to add extra filtering.

Table 6 shows an example of a J type thermocouple voltage for various combinations of 0°C and 50°C on the reference and measurement junctions. Table 6 also shows the performance of the AD8494 amplifying the thermocouple voltage and compensating for the reference junction temperature changes, thus eliminating the error.

Table 6. J Type Thermocouple Voltages and AD8494 Readings

Measurement Junction Temperature (T_{MJ})	Reference Junction Temperature (T_{RJ})	Thermocouple Voltage	AD8494 Reading
50°C	0°C	+2.585 mV	250 mV
50°C	50°C	0 mV	250 mV
0°C	0°C	0 mV	0 mV
0°C	50°C	−2.585 mV	0 mV

AD8494/AD8495/AD8496/AD8497 ARCHITECTURE

Figure 27 shows a block diagram of the AD849x circuitry. The AD849x consists of a low offset, fixed-gain instrumentation amplifier and a temperature sensor.

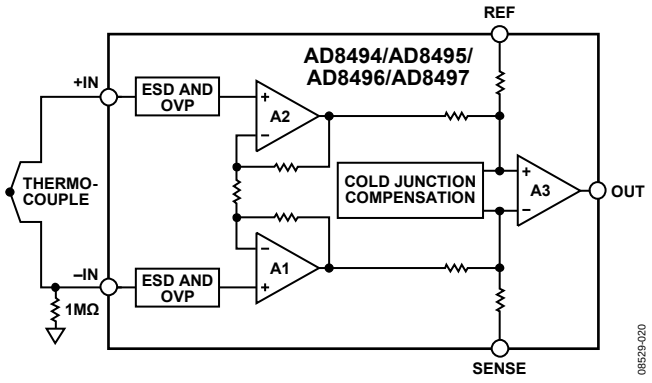

Figure 27. Block Diagram

The AD849x output is a voltage that is proportional to the temperature at the measurement junction of the thermocouple (T_{MJ}). To derive the measured temperature from the AD849x output voltage, use the following transfer function:

$$T_{MJ} = (V_{OUT} - V_{REF})/(5\ \text{mV/°C})$$

An ideal AD849x achieves this output with an error of less than ±2°C, within the specified operating ranges listed in Table 7.

Instrumentation Amplifier

A thermocouple signal is so small that considerable gain is required before it can be sampled properly by most ADCs. The AD849x has an instrumentation amplifier with a fixed gain that generates an output voltage of 5 mV/°C for J type and K type thermocouples.

$$V_{OUT} = (T_{MJ} \times 5\ \text{mV/°C}) + V_{REF}$$

To accommodate the nonlinear behavior of the thermocouple, each amplifier has a different gain so that the 5 mV/°C is accurately maintained for a given temperature measurement range.

- The AD8494 and AD8496 (J type) have an instrumentation amplifier with a gain of 96.7 and 90.35, respectively.
- The AD8495 and AD8497 (K type) have an instrumentation amplifier with a gain of 122.4.

The small thermocouple voltages mean that signals are quite vulnerable to interference, especially when measured with single-ended amplifiers. The AD849x addresses this issue in several ways. Low input bias currents and high input impedance allow for easy filtering at the inputs. The excellent common-mode rejection of the AD849x prevents variations in ground potential and other common-mode noise from affecting the measurement.

Temperature Sensor (Cold Junction Compensation)

The AD849x also includes a temperature sensor for cold junction compensation. This temperature sensor is used to measure the reference junction temperature of the thermocouple and to cancel its effect.

- The AD8494/AD8495 cold junction compensation is optimized for operation in a lab environment, where the ambient temperature is around 25°C. The AD8494/AD8495 are specified for an ambient range of 0°C to 50°C.
- The AD8496/AD8497 cold junction compensation is optimized for operation in a less controlled environment, where the temperature is around 60°C. The AD8496/AD8497 are specified for an ambient range of 25°C to 100°C. Application examples for the AD8496/AD8497 include automotive applications, autoclave, and ovens.

Thermocouple Break Detection

The AD849x offers open thermocouple detection. The inputs of the AD849x are PNP type transistors, which means that the bias current always flows out of the inputs. Therefore, the input bias current drives any unconnected input high, which rails the output. Connecting the negative input to ground through a 1 MΩ resistor causes the AD849x output to rail high in an open thermocouple condition (see Figure 6, Figure 28, and the Ground Connection section).

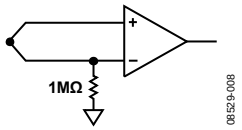

Figure 28. Ground the Negative Input Through a 1 MΩ Resistor for Open Thermocouple Detection

Input Voltage Protection

The AD849x has very robust inputs. Input voltages can be up to 25 V from the opposite supply rail. For example, with a +5 V positive supply and a −3 V negative supply, the part can safely withstand voltages at the inputs from −20 V to +22 V. Voltages at the reference and sense pins should not go beyond 0.3 V of the supply rails.

MAXIMUM ERROR CALCULATION

As is normally the case, the AD849x outputs are subject to calibration, gain, and temperature sensitivity errors. The user can calculate the maximum error from the AD849x using the following information.

The five primary sources of AD849x error are described in this section.

AD849x Initial Calibration Accuracy

Error at the initial calibration point can be easily calibrated out with a one-point temperature calibration. See Table 2 for the specifications.

AD849x Ambient Temperature Rejection

The specified ambient temperature rejection represents the ability of the AD849x to reject errors caused by changes in the ambient temperature/reference junction. For example, with 0.025°C/°C ambient temperature rejection, a 20°C change in the reference junction temperature adds less than 0.5°C error to the measurement. See Table 2 for the specifications.

AD849x Gain Error

Gain error is the amount of additional error when measuring away from the measurement junction calibration point. For example, if the part is calibrated at 25°C and the measurement junction is 100°C with a gain error of 0.1%, the gain error contribution is (100°C − 25°C) × (0.1%) = 0.075°C. This error can be calibrated out with a two-point calibration if needed, but it is usually small enough to ignore. See Table 2 for the specifications.

Manufacturing Tolerances of the Thermocouple

Consult the data sheet for your thermocouple to find the specified tolerance of the thermocouple.

Linearity Error of the Thermocouple

Each part in the AD849x family is precision trimmed to optimize a linear operating range for a specific thermocouple type and for the widest possible measurement and ambient temperature ranges. The AD849x achieves a linearity error of less than ±2°C, within the specified operating ranges listed in Table 7. This error is due only to the nonlinearity of the thermocouple.

Table 7. AD849x ±2°C Accuracy Temperature Ranges

Part	Thermocouple Type	Max Error	Ambient Temperature Range	Measurement Temperature Range
AD8494	J	±2°C	0°C to 50°C	−35°C to +95°C
AD8495	K	±2°C	0°C to 50°C	−25°C to +400°C
AD8496	J	±2°C	25°C to 100°C	+55°C to +565°C
AD8497	K	±2°C	25°C to 100°C	−25°C to +295°C

For temperature ranges outside those listed in Table 7 or for instructions on how to correct for thermocouple nonlinearity error with software, see the AN-1087 Application Note for additional details.

RECOMMENDATIONS FOR BEST CIRCUIT PERFORMANCE

Input Filter

A low-pass filter before the input of the AD849x is strongly recommended (see Figure 29), especially when operating in an electrically noisy environment. Long thermocouple leads can function as an excellent antenna and pick up many unwanted signals.

The filter should be set to a low corner frequency that still allows the input signal to pass through undiminished. The primary purpose of the filter is to remove RF signals, which, if allowed to reach the AD849x, can be rectified and appear as temperature fluctuations.

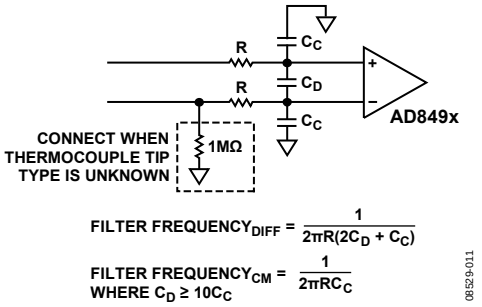

Figure 29. Filter for Any Thermocouple Style

To prevent input offset currents from affecting the measurement accuracy, the filter resistor values should be less than 50 kΩ.

Ground Connection

It is always recommended that the thermocouple be connected to ground through a 100 kΩ to 1 MΩ resistor placed at the negative (inverting) input of the amplifier on the PCB (see Figure 30). This solution works well regardless of the thermocouple tip style.

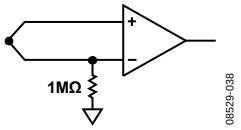

Figure 30. Ground the Thermocouple with a 1 MΩ Resistor

If there is no electrical connection at the measurement junction (insulated tip), the resistor value is small enough that no meaningful common-mode voltage is generated. If there is an electrical connection through a grounded or exposed tip, the resistor value is large enough that any current from the measurement tip to ground is very small, preventing measurement errors.

The AD849x inputs require only one ground connection or source of common-mode voltage. Any additional ground connection is detrimental to performance because ground loops can form through the thermocouple, easily swamping the small thermocouple signal. Grounding the thermocouple through a resistor as recommended prevents such problems.

Keeping the AD849x at the Same Temperature as the Reference Junction

The AD849x compensates for thermocouple reference junction temperature by using an internal temperature sensor. It is critical to keep the reference junction (thermocouple-to-PCB connection) as close to the AD849x as possible. Any difference in temperature between the AD849x and the reference junction appears directly as temperature error. Temperature difference between the device and the reference junction may occur if the AD849x is not physically close to the reference junction or if the AD849x is required to supply large amounts of output power.

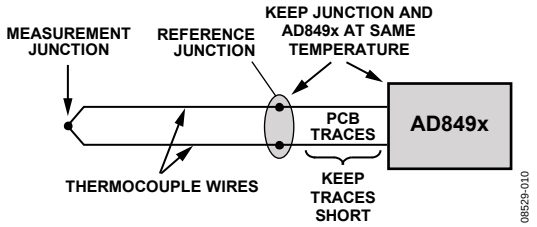

Figure 31. Compensating for Thermocouple Reference Junction Temperature

Driving the Reference Pin

The AD849x comes with a reference pin, which can be used to offset the output voltage. This is particularly useful when reading a negative temperature in a single-supply system.

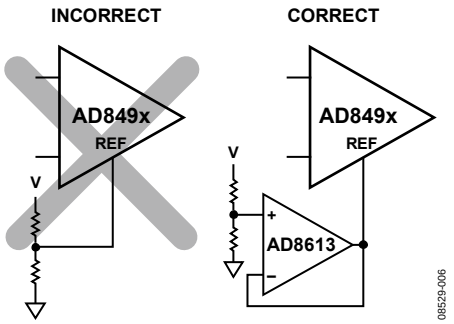

Figure 32. Driving the Reference Pin

For best performance, the reference pin should be driven with a low output impedance source, not a resistor divider. The AD8613 and the OP777 are good choices for the buffer amplifier.

Debugging Tip

If the AD849x is not providing the expected performance, a useful debugging step is to implement the ambient temperature configuration in Figure 34. If the ambient temperature sensor does not work as expected, the problem is likely with the AD849x or with the downstream circuitry. If the ambient temperature sensor configuration is working correctly, the problem typically lies with how the thermocouple is connected to the AD849x. Common errors include an incorrect grounding configuration or lack of filtering.

APPLICATIONS INFORMATION

BASIC CONNECTION

Figure 33 shows an example of a basic connection for the AD849x, with a J type or K type thermocouple input.

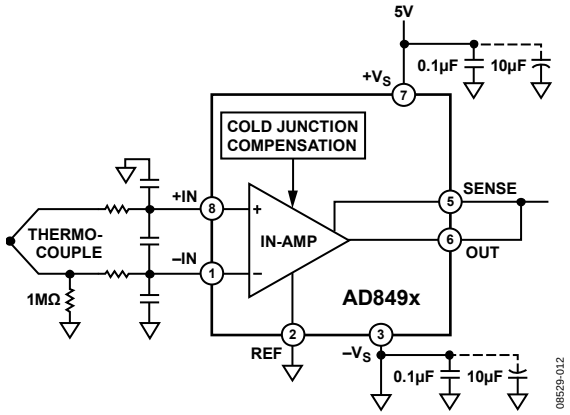

Figure 33. Basic Connection for the AD849x

To measure negative temperatures, apply a voltage at the reference pin to offset the output voltage at 0°C. The output voltage of the AD849x is

$$V_{OUT} = (T_{MJ} \times 5\ \text{mV/°C}) + V_{REF}$$

A filter at the input is recommended to remove high frequency noise. The 1 MΩ resistor to ground enables open thermocouple detection and proper grounding of the thermocouple. The sense pin should be connected to the output pin of the AD849x.

Decoupling capacitors should be used to ensure clean power supply voltages on $+V_S$ and, if using dual supplies, on $-V_S$, also. A 0.1 µF capacitor should be placed as close as possible to each AD849x supply pin. A 10 µF tantalum capacitor can be used farther away from the part and can be shared.

AMBIENT TEMPERATURE SENSOR

The AD849x can be configured as a standalone Celsius thermometer with a 5 mV/°C output, as shown in Figure 34. The thermocouple sensing functionality is disabled by shorting both AD849x inputs to ground; the AD849x simply outputs the value from the on-board temperature sensor.

As a temperature sensor, the AD8494 has a measurement temperature range of −40°C to +125°C with a precision output of

$$V_{OUT} = T_A \times 5\ \text{mV/°C}$$

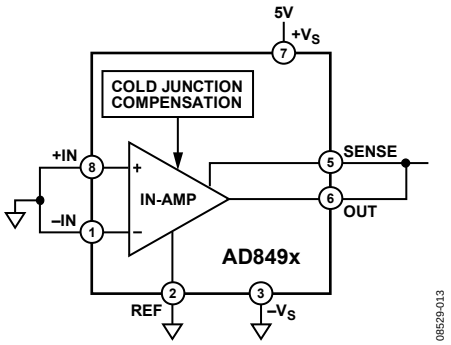

Figure 34. Ambient Temperature Sensor

The AD8494 is the best choice for use as an ambient temperature sensor. The AD8495, AD8496, and AD8497 can also be configured as ambient temperature sensors, but their output transfer functions are not precisely 5 mV/°C. For information about the exact transfer functions of the AD8494/AD8495/AD8496/AD8497, see the AN-1087 Application Note for additional details.

The thermometer mode can be particularly useful for debugging a misbehaving circuit. If the basic connection is not working, disconnect the thermocouple and short both inputs to ground. If the system reads the ambient temperature correctly, the problem is related to the thermocouple. If the system does not read the ambient temperature correctly, the problem is with the AD849x or with the downstream circuitry.

SETPOINT CONTROLLER

The AD849x can be used as a temperature setpoint controller, with a thermocouple input from a remote location or with the AD849x itself being used as a temperature sensor. When the measured temperature is below the setpoint temperature, the output voltage goes to $-V_S$. When the measured temperature is above the setpoint temperature, the output voltage goes to $+V_S$. For best accuracy and CMRR performance, the setpoint voltage should be created with a low impedance source. If the setpoint voltage is generated with a voltage divider, a buffer is recommended.

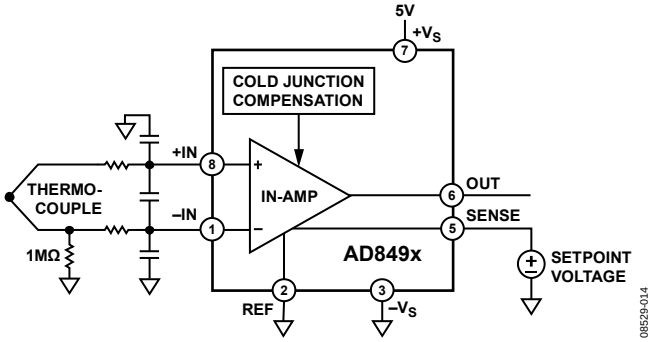

Figure 35. Setpoint Controller

Hysteresis can be added to the setpoint controller by using a resistor divider from the output to the reference pin, as shown in Figure 36. The hysteresis in °C is

$$T_{HYST} = \frac{V_S \times R1/(R1+R2)}{5\,\text{mV}/^\circ\text{C}}$$

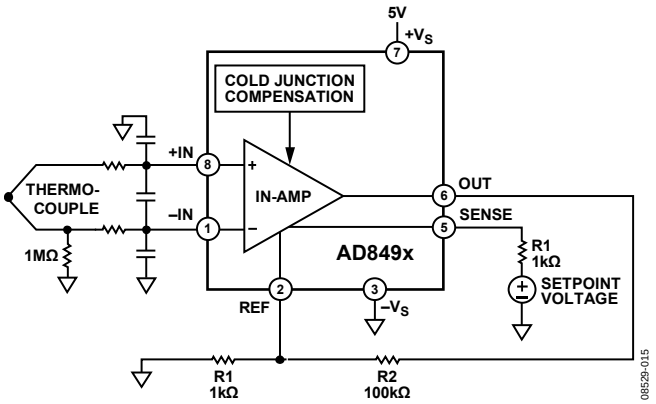

Figure 36. Adding 10 Degrees of Hysteresis

A resistor equivalent to the output resistance of the divider should be connected to the sense pin to ensure good CMRR.

MEASURING NEGATIVE TEMPERATURES

The AD849x can measure negative temperatures on dual supplies and on a single supply. When operating on dual supplies with the reference pin grounded, a negative output voltage indicates a negative temperature at the thermocouple measurement junction.

$$V_{OUT} = (T_{MJ} \times 5\ \text{mV}/^\circ\text{C}) + V_{REF}$$

When operating the AD849x on a single supply, level-shift the output by applying a positive voltage (less than $+V_S$) on the reference pin. An output voltage less than V_{REF} indicates a negative temperature at the thermocouple measurement junction.

REFERENCE PIN ALLOWS OFFSET ADJUSTMENT

The reference pin can be used to level-shift the AD849x output voltage. This is useful for measuring negative temperatures on a single supply and to match the AD849x output voltage range to the input voltage range of the subsequent electronics in the signal chain.

The reference pin can also be used to offset any initial calibration errors. Apply a small reference voltage proportional to the error to nullify the effect of the calibration error on the output.

OUTLINE DIMENSIONS

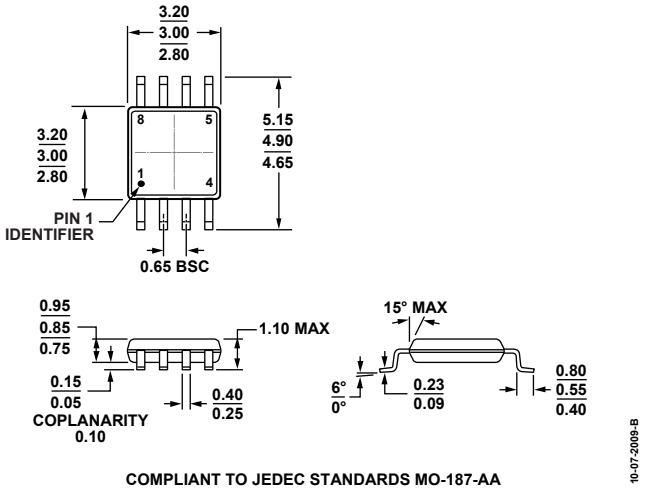

COMPLIANT TO JEDEC STANDARDS MO-187-AA

Figure 37. 8-Lead Mini Small Outline Package [MSOP]
(RM-8)
Dimensions shown in millimeters

ORDERING GUIDE

Model[1]	Temperature Range	Package Description	Package Option	Branding
AD8494ARMZ	−40°C to +125°C	8-Lead MSOP	RM-8	Y36
AD8494ARMZ-R7	−40°C to +125°C	8-Lead MSOP, 7″ Tape and Reel	RM-8	Y36
AD8494CRMZ	−40°C to +125°C	8-Lead MSOP	RM-8	Y37
AD8494CRMZ-R7	−40°C to +125°C	8-Lead MSOP, 7″ Tape and Reel	RM-8	Y37
AD8495ARMZ	−40°C to +125°C	8-Lead MSOP	RM-8	Y33
AD8495ARMZ-R7	−40°C to +125°C	8-Lead MSOP, 7″ Tape and Reel	RM-8	Y33
AD8495CRMZ	−40°C to +125°C	8-Lead MSOP	RM-8	Y34
AD8495CRMZ-R7	−40°C to +125°C	8-Lead MSOP, 7″ Tape and Reel	RM-8	Y34
AD8496ARMZ	−40°C to +125°C	8-Lead MSOP	RM-8	Y3C
AD8496ARMZ-R7	−40°C to +125°C	8-Lead MSOP, 7″ Tape and Reel	RM-8	Y3C
AD8496CRMZ	−40°C to +125°C	8-Lead MSOP	RM-8	Y3D
AD8496CRMZ-R7	−40°C to +125°C	8-Lead MSOP, 7″ Tape and Reel	RM-8	Y3D
AD8497ARMZ	−40°C to +125°C	8-Lead MSOP	RM-8	Y39
AD8497ARMZ-R7	−40°C to +125°C	8-Lead MSOP, 7″ Tape and Reel	RM-8	Y39
AD8497CRMZ	−40°C to +125°C	8-Lead MSOP	RM-8	Y3A
AD8497CRMZ-R7	−40°C to +125°C	8-Lead MSOP, 7″ Tape and Reel	RM-8	Y3A

[1] Z = RoHS Compliant Part.

©2010–2011 Analog Devices, Inc. All rights reserved. Trademarks and registered trademarks are the property of their respective owners.
D08529-0-6/11(C)

Компания «ЭлектроПласт» предлагает заключение долгосрочных отношений при поставках импортных электронных компонентов на взаимовыгодных условиях!

Наши преимущества:

- Оперативные поставки широкого спектра электронных компонентов отечественного и импортного производства напрямую от производителей и с крупнейших мировых складов;
- Поставка более 17-ти миллионов наименований электронных компонентов;
- Поставка сложных, дефицитных, либо снятых с производства позиций;
- Оперативные сроки поставки под заказ (от 5 рабочих дней);
- Экспресс доставка в любую точку России;
- Техническая поддержка проекта, помощь в подборе аналогов, поставка прототипов;
- Система менеджмента качества сертифицирована по Международному стандарту ISO 9001;
- Лицензия ФСБ на осуществление работ с использованием сведений, составляющих государственную тайну;
- Поставка специализированных компонентов (Xilinx, Altera, Analog Devices, Intersil, Interpoint, Microsemi, Aeroflex, Peregrine, Syfer, Eurofarad, Texas Instrument, Miteq, Cobham, E2V, MA-COM, Hittite, Mini-Circuits,General Dynamics и др.);

Помимо этого, одним из направлений компании «ЭлектроПласт» является направление «Источники питания». Мы предлагаем Вам помощь Конструкторского отдела:

- Подбор оптимального решения, техническое обоснование при выборе компонента;
- Подбор аналогов;
- Консультации по применению компонента;
- Поставка образцов и прототипов;
- Техническая поддержка проекта;
- Защита от снятия компонента с производства.

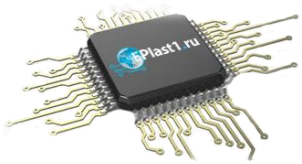

Как с нами связаться

Телефон: 8 (812) 309 58 32 (многоканальный)
Факс: 8 (812) 320-02-42
Электронная почта: org@eplast1.ru
Адрес: 198099, г. Санкт-Петербург, ул. Калинина, дом 2, корпус 4, литера А.