SLIDE SWITCHES

SEE PUSHBUTTON SWITCH SELECTION GUIDE ON NEXT PAGE

SPECIFICATIONS SUBJECT TO CHANGE WITHOUT NOTICE

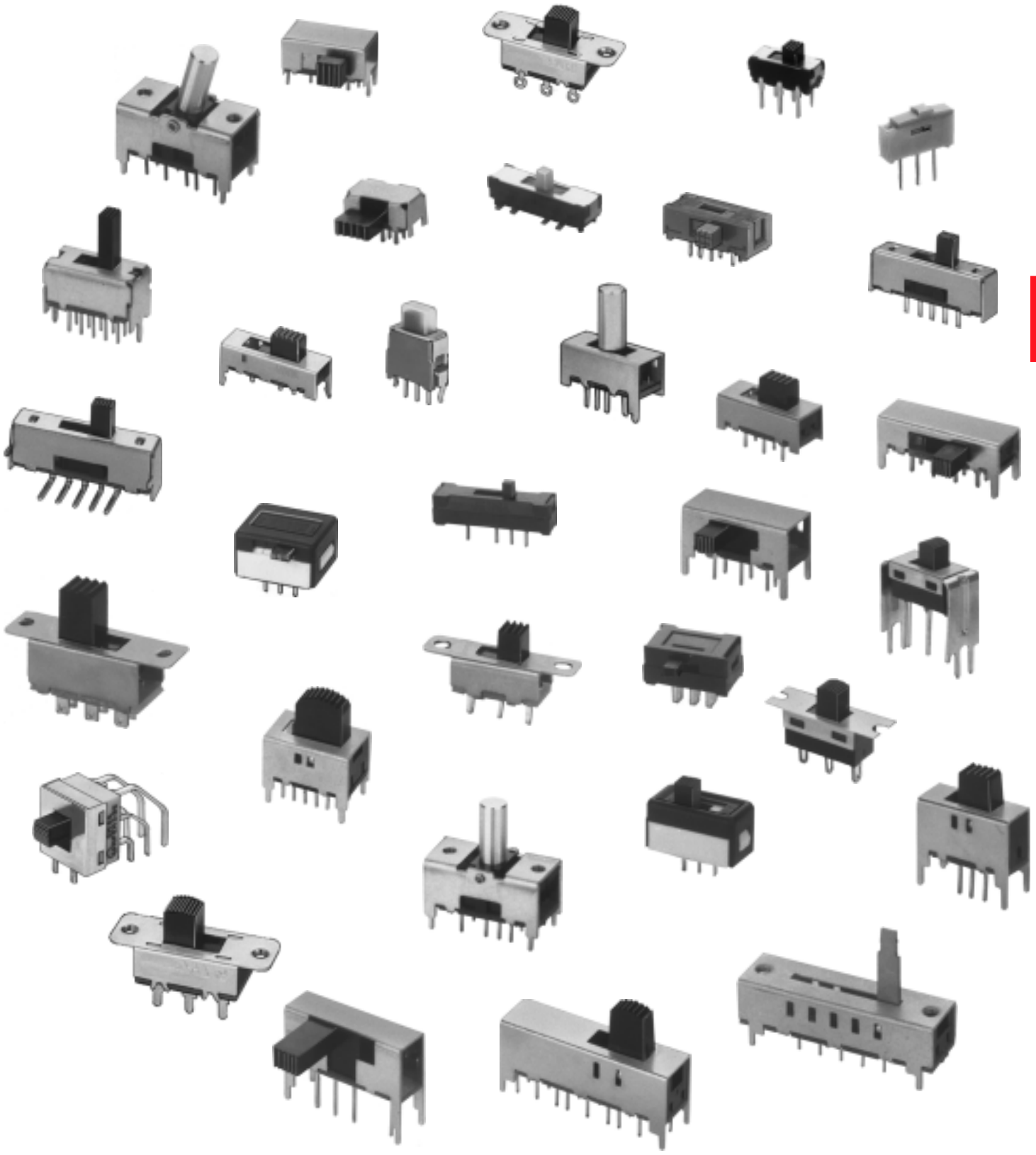

SLIDE SWITCHES

SLIDE SWITCH SELECTION GUIDE: This catalog contains an extensive variety of slide switches with numerous options and accessories. To facilitate easy selection of the desired switch for your application, the guide on page O2 lists the various Series with some key selection parameters.

SPECIFICATIONS SUBJECT TO CHANGE WITHOUT NOTICE

O

MICROMINIATURE SLIDE SWITCHES								
SERIES	POLES	POS-ITIONS	RATINGS	WASH-ABLE	LIFE CYCLES	MOUNTING	ACTUATION	PAGE(S)
MJS	1&2	2&3	100 ma @ 12VDC	No	10,000	P.C. thru-hole	Vert. & rt. angle	O3-O4
MSSA	2	2	100 ma @ 30VDC or 125VAC & dry circuit	No	10,000	P.C. thru-hole	Vert. & rt. angle	O5
MA	1	2&3	300 ma @ 4VDC	No	10,000	Surface	Rt. angle	O6
MHSS	1&2	2	300 ma @ 6VDC	No	5000	P.C. thru-hole	Vert. & rt. angle	O7
MS	1,2&4	2&3	300 ma @ 6VDC	No	10,000	P.C. thru-hole & surface	Vert. & rt, angle	O8-O10
MMS	1,2,4&6	2&3	300 ma @ 30VDC	No	10,000	P.C. thru-hole	Vert. & rt. angle	O11-O12

MINIATURE SLIDE SWITCHES								
SERIES	POLES	POS-ITIONS	RATINGS	WASH-ABLE	LIFE CYCLES	MOUNTING	ACTUATION	PAGE(S)
MSTS	1&2	3	300 ma @ 28VDC	Yes	10,000	P.C. thru-hole	Vertical	O13
MHS	1&2	2&3	300 ma @ 30VDC	Yes	10,000	P.C. thru-hole	Vertical	O14-O17
SLB	1&2	2,3,4&5	300 ma @ 30VDC or 125 VAC	Yes	10,000	P.C. thru-hole	Vert. & rt. angle	O18-O25
SLC	1&2	2	300 ma @ 30VDC or 125 VAC	Yes	10,000	Panel	Vertical	O26
SLG	1	2	300 ma @ 30VDC or 125 VAC	Yes	10,000	P.C. thru-hole & panel	Vertical	O27
SLA	1&2	2	500 ma @ 125VAC	Yes	10,000	P.C. thru-hole & panel	Vertical	O28-O29

ALPHA-NUMERIC INDEX BY SERIES

SERIES	Page (s)	SERIES	Page (s)
MA	O6	MSSA	O5
MHS	O14-O17	MSTS	O13
MHSS	O7	SLA	O28-O29
MJS	O3-O4	SLB	O18-O25
MMS	O11-O12	SLC	O26
MS	O8-O10	SLG	O27

APEM, PO BOX 8288, HAVERHILL, MA USA 01835-0788 TOLL FREE: (877) 246-7890 FAX: (978) 372-3534 E-mail: info@apem.com

MJS Series

Microminiature Slide Switches

SPECIFICATIONS SUBJECT TO CHANGE WITHOUT NOTICE

SPECIFICATIONS

Contact rating: 100 mA at 12 VDC
Initial contact resistance: 20 milliohms max.
Insulation resistance: 100 megohms min. at 500 VDC
Dielectric strength: 500 volts RMS at sea level
Electrical life: 10,000 cycles min.
Operating temperature range: -10°C to +60°C
Actuation force: 225g (average)
Solder heat resistance: 260°C max. for 5 seconds
Washing not recommended

FEATURES

- **Molded-in terminals minimize flux or solder entry.**
- **Molded-in high temperature phenolic base.**
- **Low Profile.**
- **Bifurcated wiping contact design.**

MATERIALS

Contacts & terminals: Silver plated
Case & actuator: Thermoplastic
Terminal seal: Molded-in

O

MODEL NO.
MJS12

VERTICAL ACTUATOR

1P2T

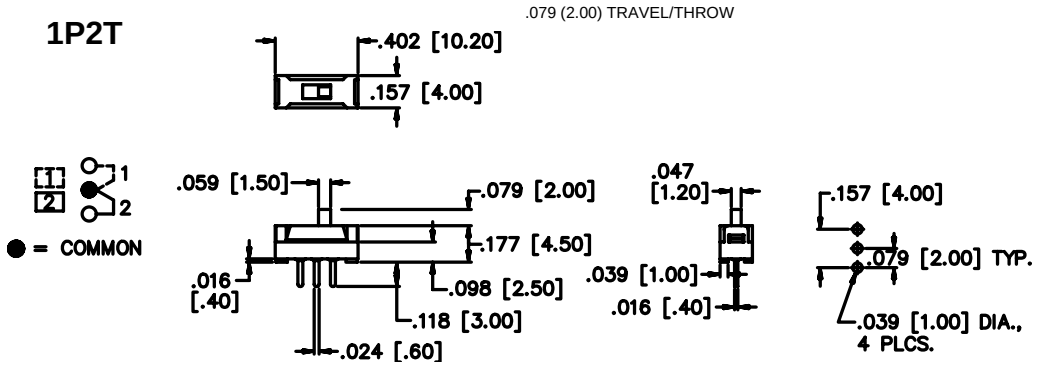

SCHEMATIC | MECHANICAL OUTLINE | P.C. BOARD LAYOUT

MODEL NO.
MJS12R

RIGHT ANGLE ACTUATOR

1P2T

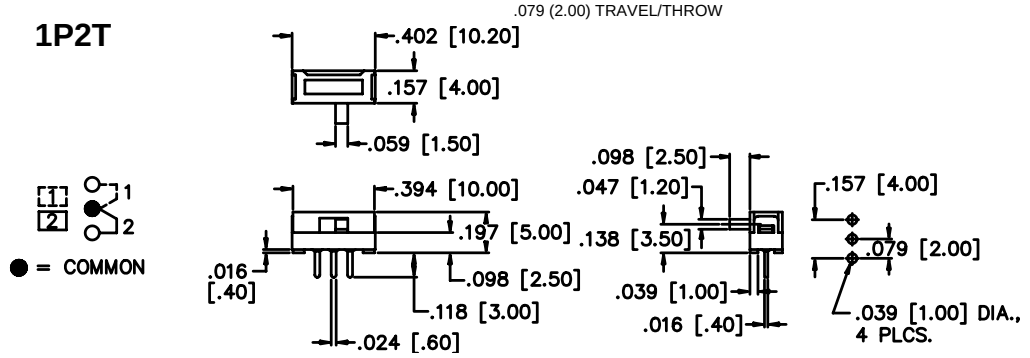

SCHEMATIC | MECHANICAL OUTLINE | P.C. BOARD LAYOUT

MODEL NO.
MJS13

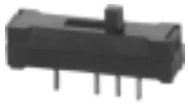

VERTICAL ACTUATOR

1P3T

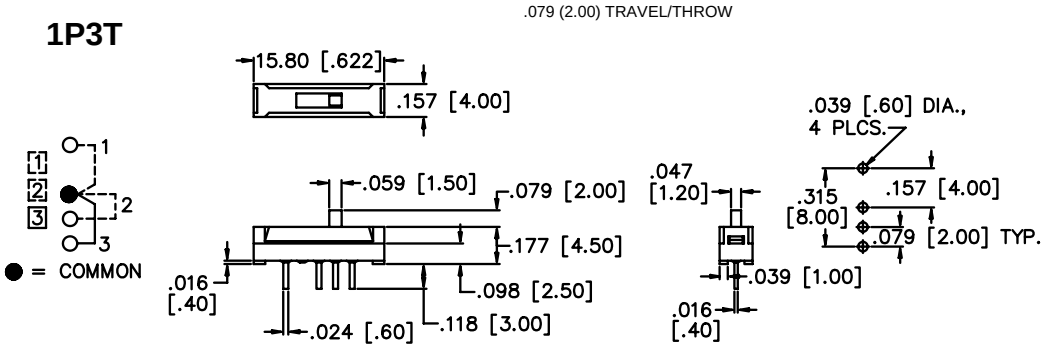

SCHEMATIC | MECHANICAL OUTLINE | P.C. BOARD LAYOUT

MJS Series

Microminiature Slide Switches

O

MODEL NO.

MJS13R

RIGHT ANGLE ACTUATOR

1P3T

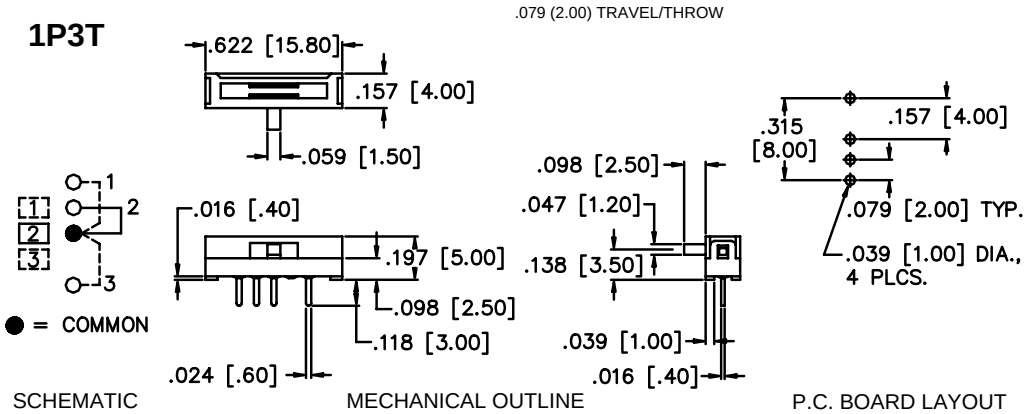

SCHEMATIC MECHANICAL OUTLINE P.C. BOARD LAYOUT

MODEL NO.

MJS22

VERTICAL ACTUATOR

2P2T

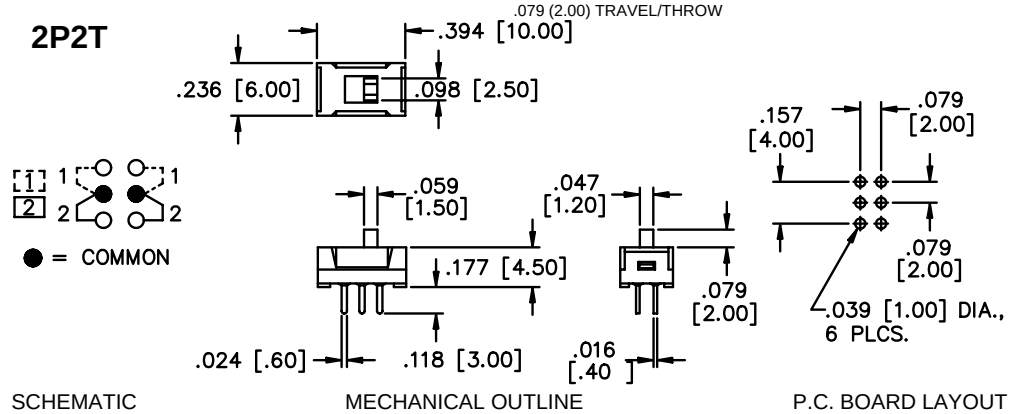

SCHEMATIC MECHANICAL OUTLINE P.C. BOARD LAYOUT

MODEL NO.

MJS22R

RIGHT ANGLE ACTUATOR

2P2T

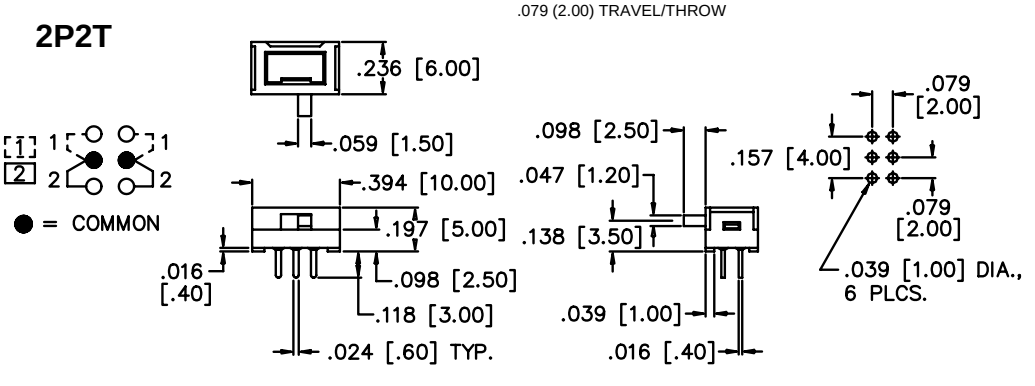

SCHEMATIC MECHANICAL OUTLINE P.C. BOARD LAYOUT

SPECIFICATIONS SUBJECT TO CHANGE WITHOUT NOTICE

APEM, PO BOX 8288, HAVERHILL, MA USA 01835-0788 TOLL FREE: (877) 246-7890 FAX: (978) 372-3534 E-mail: info@apem.com

MSSA Series

Microminiature Slide Switches

SPECIFICATIONS SUBJECT TO CHANGE WITHOUT NOTICE

SPECIFICATIONS

Contact ratings: Gold; 0.4 Volt-Amps (VA) max. at 20 V max. (AC or DC)
Silver; 100 mA at 125 VAC or 30 VDC
Initial contact resistance: 30 milliohms max.
Insulation resistance: 100 megohms min. at 250 VDC
Dielectric strength: 250 volts RMS at sea level
Electrical life: 10,000 cycles min.
Operating temperature range: -10°C to +60°C
Actuation force: 250g ± 150g
Solder heat resistance: 260°C max. for 3 seconds
Washing not recommended

FEATURES

- **Low Profile.**
- **Epoxy sealed terminals.**
- **Cosmetic molded case.**

MATERIALS

Contacts & terminals: Gold or silver available (see contact ratings)
Housing and Actuator: Thermoplastic
Base: High temperature thermoplastic
Terminal seal: Epoxy

MODEL NO.	PLATING
MSSA22G	GOLD

2P2T

VERTICAL ACTUATOR

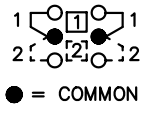

SCHEMATIC

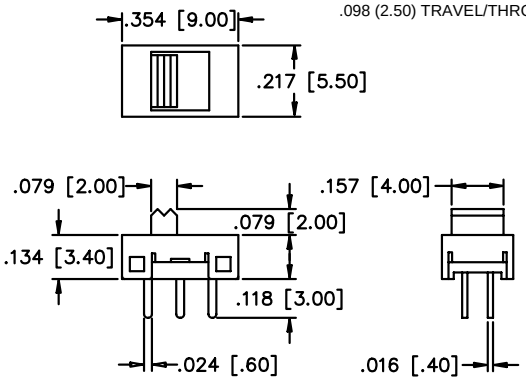

MECHANICAL OUTLINE

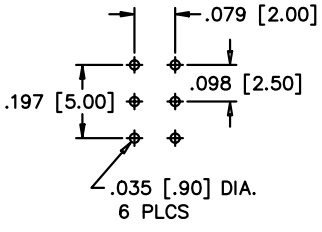

P.C. BOARD LAYOUT

O

MA Series

Microminiature Memory Card Slide Switches

O

SPECIFICATIONS

Contact rating: 300 mA at 4 VDC
Initial contact resistance: 70 milliohms max.
Insulation resistance: 100 megohms min. at 100 VDC
Dielectric strength: 100 VAC for 1 minute
Electrical life: 10,000 cycles min.
Operating temperature range: -10°C to +60°C
Actuation force: 200g ± 100g
Solder heat resistance: Reflow - 260°C max. for 1 min.
Manual - iron temperature
305 °C max. for 6 seconds.
Washing not recommended

FEATURES

- **Ultra-compact size.**
- **Low Profile.**
- **Surface mounting with restraining bosses.**
- **Reflow or hand solderable.**

MATERIALS

Contacts: Silver plated beryllium copper
Terminals: Silver plated brass
Base: Liquid crystal polymer **Cover:** Tin plated steel
Actuator: Liquid crystal polymer

MODEL NO.

MA12R

RIGHT ANGLE ACTUATOR

1P2T

SCHEMATIC

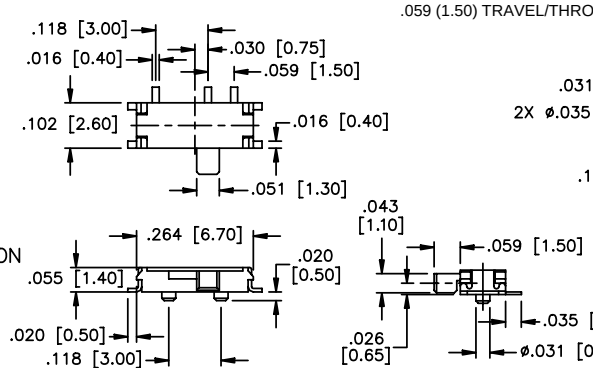

MECHANICAL OUTLINE

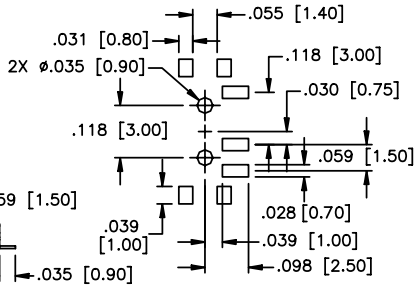

P.C. BOARD LAYOUT

MODEL NO.

MA12R/TR
MA13R/TR

Same as above models except supplied on tape & reel as shown.

Model No.	Dim. A	Dim. B	Dim. C
MA12RTR	.630 (16.0)	.217 (5.5)	.646 (16.4)
MA13R/TR	.945 (24.0)	.453 (11.5)	.960 (24.4)

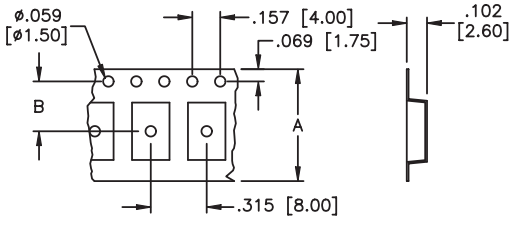

CARRIER TAPE

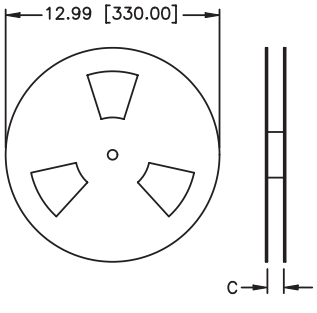

REEL DIMENSIONS

SPECIFICATIONS SUBJECT TO CHANGE WITHOUT NOTICE

APEM, PO BOX 8288, HAVERHILL, MA USA 01835-0788 TOLL FREE: (877) 246-7890 FAX: (978) 372-3534 E-mail: info@apem.com

MHSS Series

Microminiature Slide Switches

SPECIFICATIONS SUBJECT TO CHANGE WITHOUT NOTICE

SPECIFICATIONS

Contact ratings: 300 mA at 6 VDC

Initial contact resistance: 60 milliohms max.

Insulation resistance: 100 megohms min. at 100 VDC

Dielectric strength: 100 VAC for 1 minute

Electrical life: 5000 cycles min.

Operating temperature range: -20°C to +70°C

Solder heat resistance: 350°C max. for 3 seconds

Washing not recommended

FEATURES

- **Excellent tactile feed-back (detent action).**
- **Molded-in terminals minimize flux or solder entry.**
- **Ultra-compact case size.**
- **Low profile.**

MATERIALS

Contacts & terminals: Silver plated
Case: 30% Glass filled nylon, type 6/6, black
Actuator: Nylon, type 6/6, black (blue for MHSS2220 only)

O

MODEL NO.

MHSS1104

VERTICAL ACTUATOR

1P2T

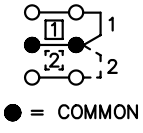

SCHEMATIC

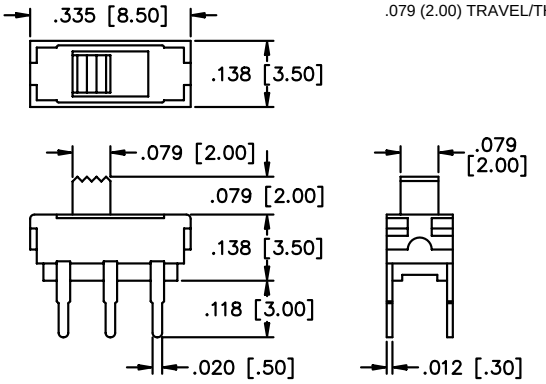

MECHANICAL OUTLINE

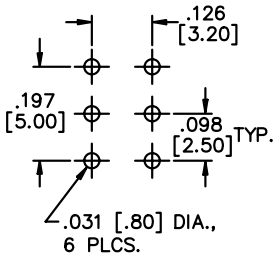

P.C. BOARD LAYOUT

MODEL NO.

MHSS1105

RIGHT ANGLE ACTUATOR

1P2T

SCHEMATIC

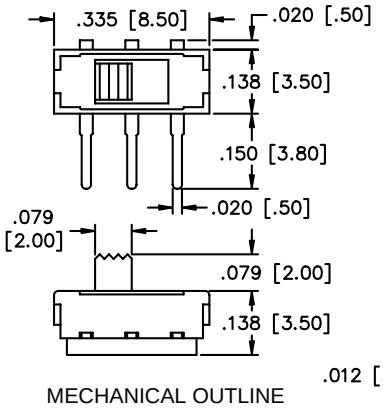

MECHANICAL OUTLINE

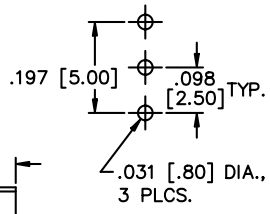

P.C. BOARD LAYOUT

MS Series

Microminiature Slide Switches

SPECIFICATIONS

Contact rating: 300 mA at 6 VDC

Initial contact resistance: 70 milliohms max.

Insulation resistance: 100 megohms max. at 500 VDC

Dielectric strength: 500 volts RMS at sea level

Electrical life: 10,000 cycles min.

Operating temperature range: -10°C to +60°C

Solder heat resistance: 260°C max. for 3 seconds

Washing not recommended

FEATURES

- **Low profile.**
- **Insert molded terminals.**
- **Stainless steel cover.**

MATERIALS

Contacts & terminals: Silver plated
Cover: Stainless steel
Actuator: Thermoplastic
Base: High temperature thermoplastic **Terminal seal:** Insert molded

O

SPECIFICATIONS SUBJECT TO CHANGE WITHOUT NOTICE

MODEL NO.
MS12

VERTICAL ACTUATOR

1P2T

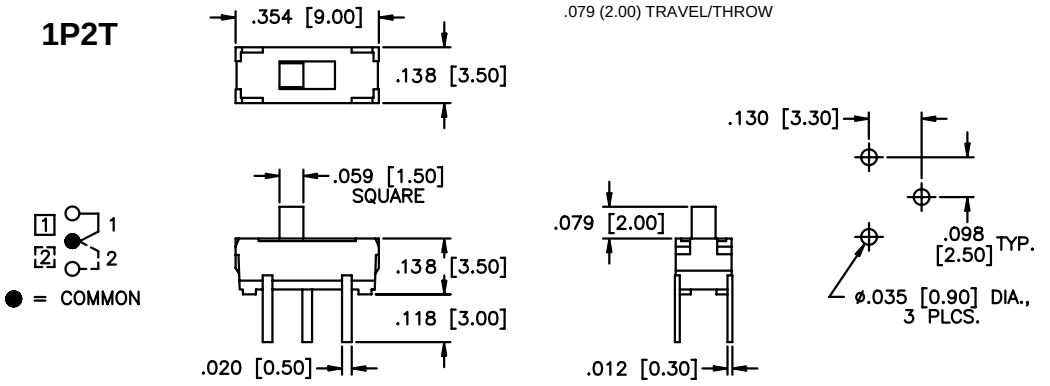

SCHEMATIC MECHANICAL OUTLINE P.C. BOARD LAYOUT

MODEL NO.
MS13

VERTICAL ACTUATOR

1P3T

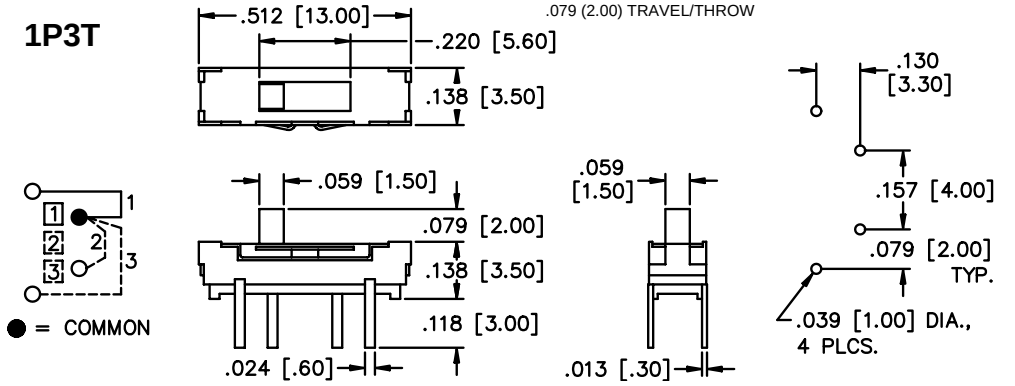

SCHEMATIC MECHANICAL OUTLINE P.C. BOARD CUTOUT

MODEL NO.
MS13S

VERTICAL ACTUATOR

1P3T

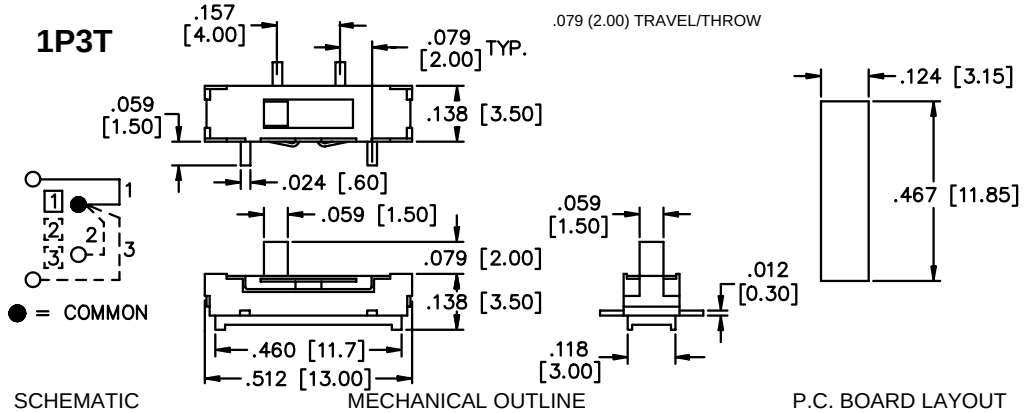

SCHEMATIC MECHANICAL OUTLINE P.C. BOARD LAYOUT

APEM, PO BOX 8288, HAVERHILL, MA USA 01835-0788 TOLL FREE: (877) 246-7890 FAX: (978) 372-3534 E-mail: info@apem.com

MS Series

Microminiature Slide Switches

SPECIFICATIONS SUBJECT TO CHANGE WITHOUT NOTICE

MODEL NO.

MS22

VERTICAL ACTUATOR

2P2T

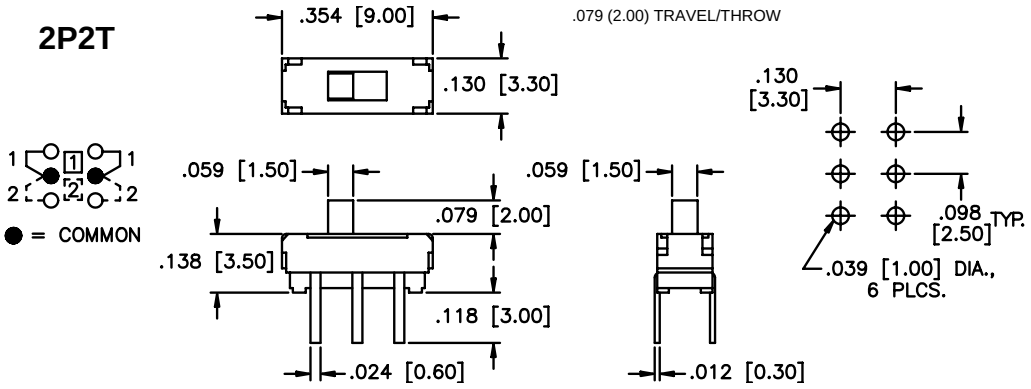

SCHEMATIC MECHANICAL OUTLINE P.C. BOARD LAYOUT

MODEL NO.

MS22R

RIGHT ANGLE ACTUATOR

2P2T

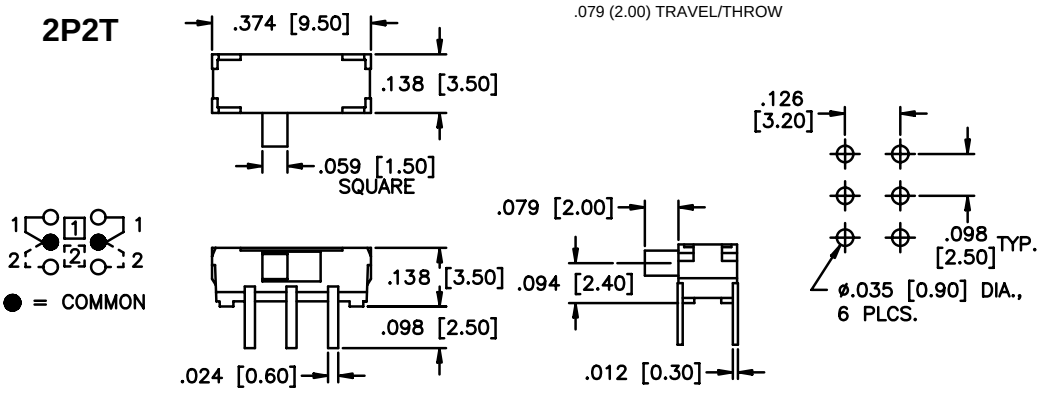

SCHEMATIC MECHANICAL OUTLINE P.C. BOARD LAYOUT

MODEL NO.

MS23

VERTICAL ACTUATOR

2P3T

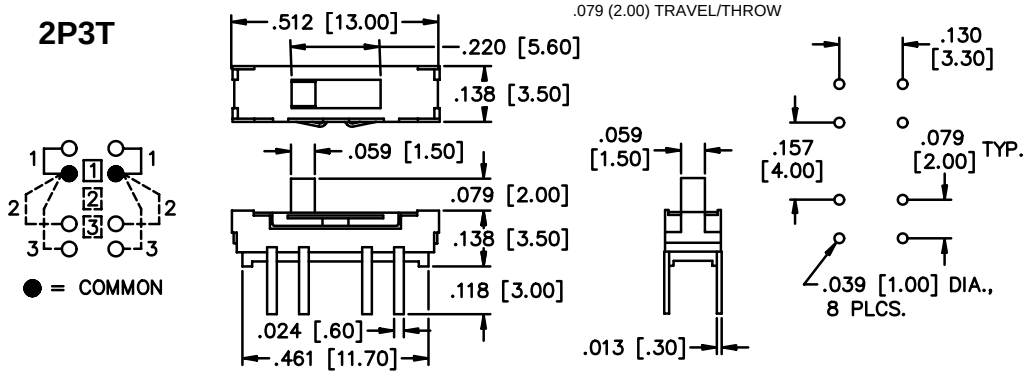

SCHEMATIC MECHANICAL OUTLINE P.C. BOARD LAYOUT

MODEL NO.

MS23R

RIGHT ANGLE ACTUATOR

2P3T

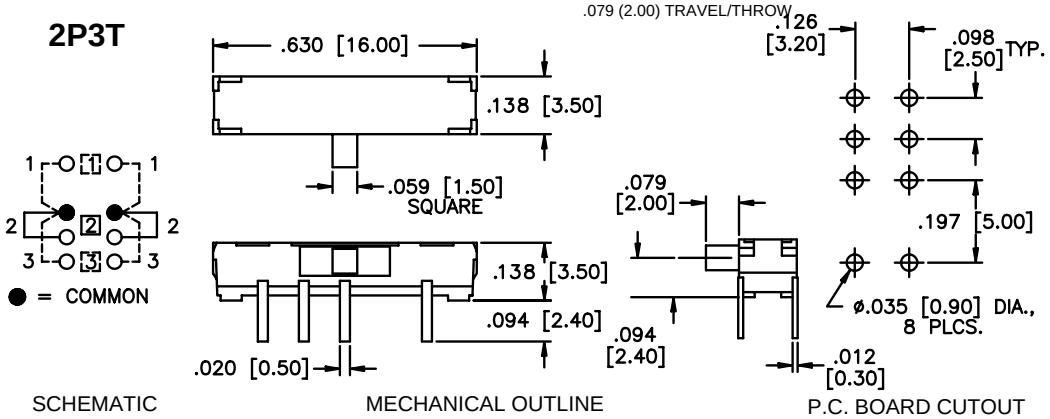

SCHEMATIC MECHANICAL OUTLINE P.C. BOARD CUTOUT

O

MODEL NO.
MS23S

VERTICAL ACTUATOR

2P3T

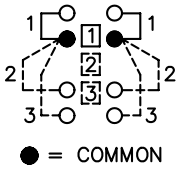

SCHEMATIC

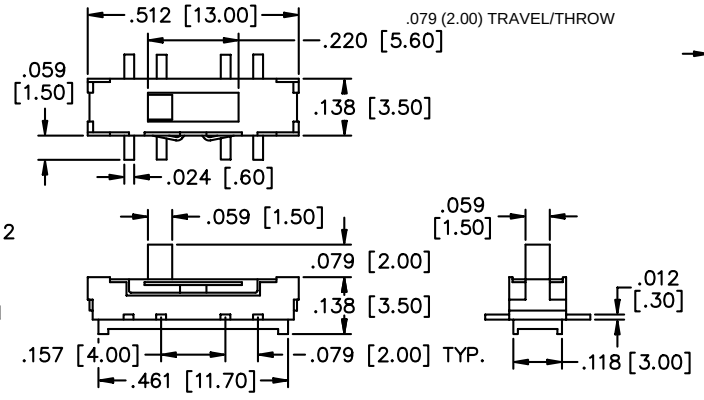

MECHANICAL OUTLINE

P.C. BOARD CUTOUT

MODEL NO.
MS42R

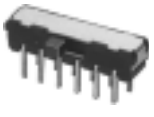

RIGHT ANGLE ACTUATOR

4P2T

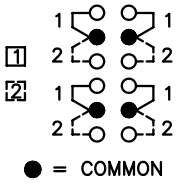

SCHEMATIC

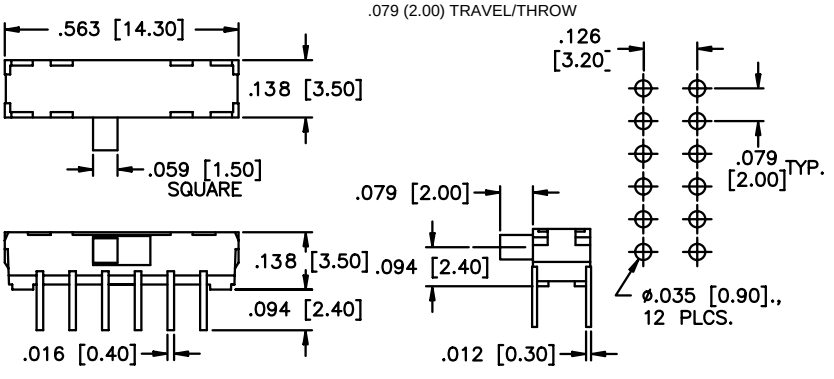

MECHANICAL OUTLINE

P.C. BOARD LAYOUT

SPECIFICATIONS SUBJECT TO CHANGE WITHOUT NOTICE

O

APEM, PO BOX 8288, HAVERHILL, MA USA 01835-0788 TOLL FREE: (877) 246-7890 FAX: (978) 372-3534 E-mail: info@apem.com

MMS Series

Microminiature Slide Switches

SPECIFICATIONS SUBJECT TO CHANGE WITHOUT NOTICE

SPECIFICATIONS

Contact ratings: 300 mA at 30 VDC

Initial contact resistance: 25 milliohms max.

Insulation resistance: 100 megohms min. at 500 VDC

Dielectric strength: 500 volts RMS for 1 minute

Electrical life: 10,000 cycles min.

Operating temperature range: -20°C to +70°C

Solder heat resistance: 255°C max. for 5 seconds max.

Washing not recommended

FEATURES

- **Bifurcated wiping contact design.**
- **Low Profile.**
- **Epoxy sealed terminals.**
- **Cosmetic molded case.**

MATERIALS

Contacts & terminals: Silver plated
Case: Polyacetal
Actuator: PBT **Base:** Glass filled PBT
Terminal seal: Epoxy or phenol resin

O

MODEL NO.
MMS22R

RIGHT ANGLE ACTUATOR

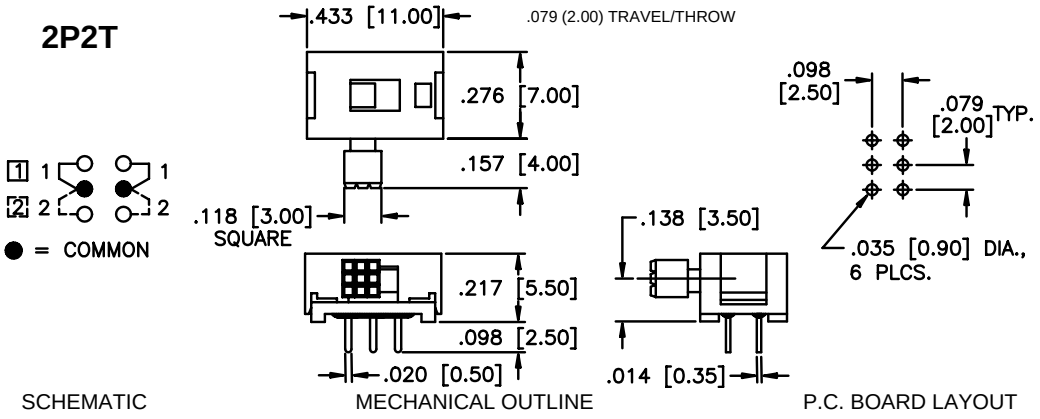

SCHEMATIC MECHANICAL OUTLINE P.C. BOARD LAYOUT

MODEL NO.
MMS23R

RIGHT ANGLE ACTUATOR

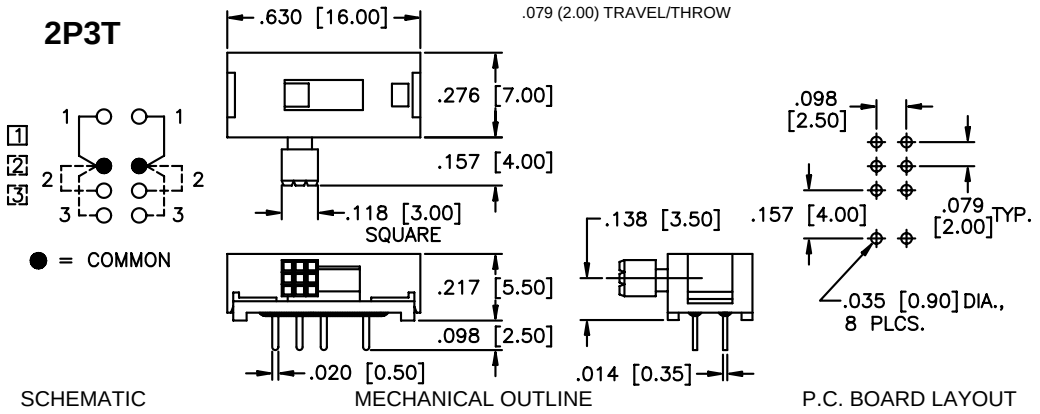

SCHEMATIC MECHANICAL OUTLINE P.C. BOARD LAYOUT

MODEL NO.
MMS42R

RIGHT ANGLE ACTUATOR

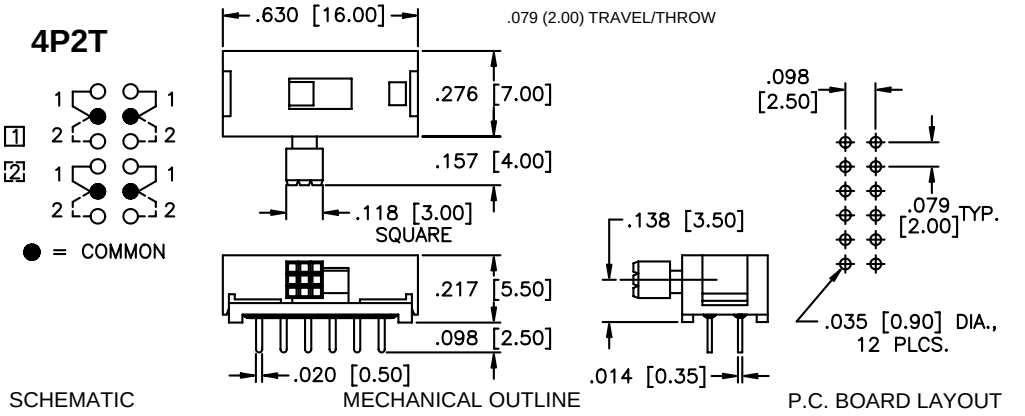

SCHEMATIC MECHANICAL OUTLINE P.C. BOARD LAYOUT

MMS Series

Microminiature Slide Switches

O

SPECIFICATIONS SUBJECT TO CHANGE WITHOUT NOTICE

MODEL NO.

MMS1208

VERTICAL ACTUATOR

1P2T

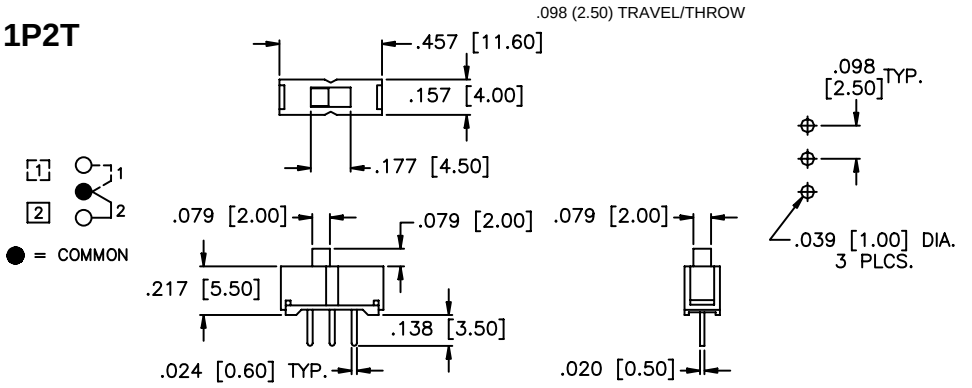

SCHEMATIC MECHANICAL OUTLINE P.C. BOARD LAYOUT

MODEL NO.

MMS2214

VERTICAL ACTUATOR

2P2T

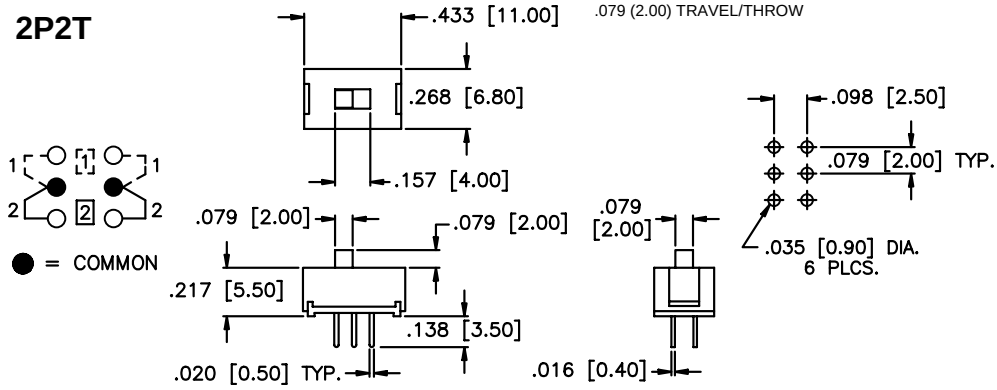

SCHEMATIC MECHANICAL OUTLINE P.C. BOARD LAYOUT

MODEL NO.

MMS42

VERTICAL ACTUATOR

4P2T

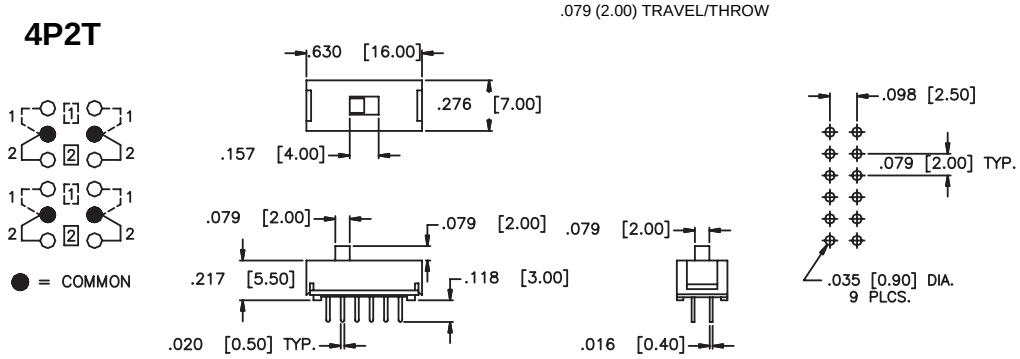

SCHEMATIC MECHANICAL OUTLINE P.C. BOARD LAYOUT

MODEL NO.

MMS6202

VERTICAL ACTUATOR

6P2T

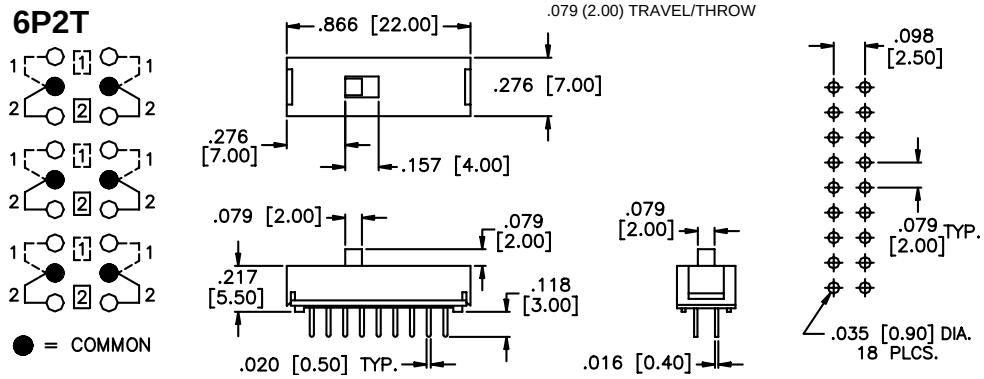

SCHEMATIC MECHANICAL OUTLINE P.C. BOARD LAYOUT

APEM, PO BOX 8288, HAVERHILL, MA USA 01835-0788 TOLL FREE: (877) 246-7890 FAX: (978) 372-3534 E-mail: info@apem.com

MSTS Series

Miniature Slide Switches

SPECIFICATIONS SUBJECT TO CHANGE WITHOUT NOTICE

SPECIFICATIONS

Contact rating: 300 mA at 28 VDC
Initial contact resistance: 20 milliohms max.
Insulation resistance: 100 megohms min. at 500 VDC
Dielectric strength: 500 VAC for 1 minute
Electrical life: 10,000 cycles min.
Operating temperature range: -20°C to +85°C
Solder heat resistance: 250°C max. for 5 seconds
Actuation force: 200-600 grams
Solvent washing permissible

FEATURES

- **Miniature compact size.**
- **Wash-through open frame construction.**
- **Snap-in p.c. mounting bracket design.**
- **Positive spring loaded ball detent mechanism.**
- **Epoxy sealed terminals.**
- **Gold plated contacts available - consult factory.**

MATERIALS

Contacts & terminals: Silver plated brass
Housing: Zinc plated steel
Actuator: Polyacetal, color black
Base: Phenolic laminated sheet **Terminal seal:** Epoxy

O

MODEL NO.
MSTS1332K

VERTICAL ACTUATOR

1P3T

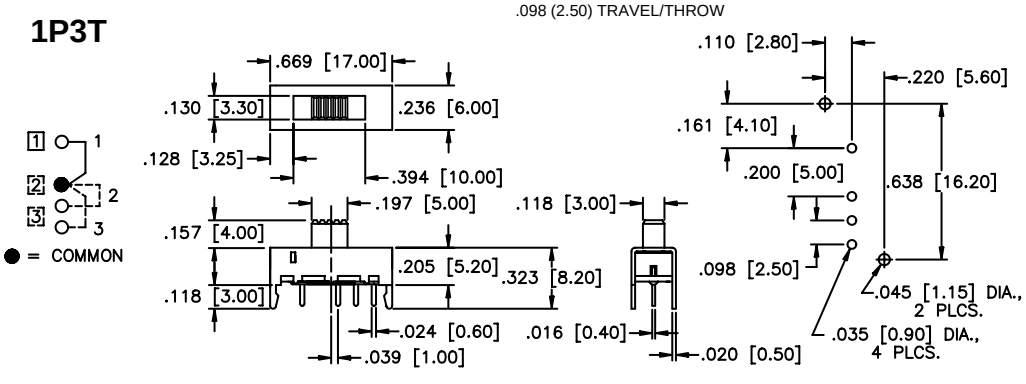

SCHEMATIC MECHANICAL OUTLINE P.C. BOARD LAYOUT

MODEL NO.
MSTS2332K

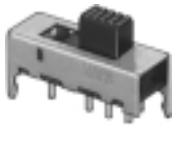

VERTICAL ACTUATOR

2P3T

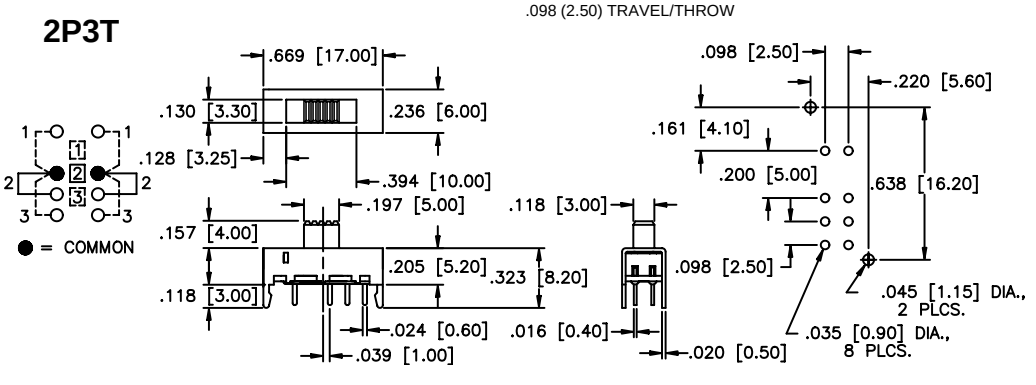

SCHEMATIC MECHANICAL OUTLINE P.C. BOARD LAYOUT

MHS Series

Miniature Slide Switches

with aluminum actuator

SPECIFICATIONS

Contact rating: 300 mA at 30 VDC
Initial contact resistance: 20 milliohms max.
Insulation resistance: 100 megohms min. at 500 VDC
Dielectric strength: 500 VAC for 1 minute
Electrical life: 10,000 cycles min.
Operating temperature range: -20°C to +85°C
Solder heat resistance: 260°C max. for 3 seconds
Actuation force: 250 ±150 grams
Solvent washing permissible

FEATURES

- **Miniature compact size.**
- **Wash-through open frame construction.**
- **Positive spring loaded ball detent mechanism.**
- **Epoxy sealed terminals.**

MATERIALS

Contacts & terminals: Silver plated brass
Housing: Tin plated steel
Actuator: Aluminum alloy
Base: Phenolic laminated sheet **Terminal seal:** Epoxy

O

MODEL NO.
MHS122K

VERTICAL ACTUATOR

1P2T

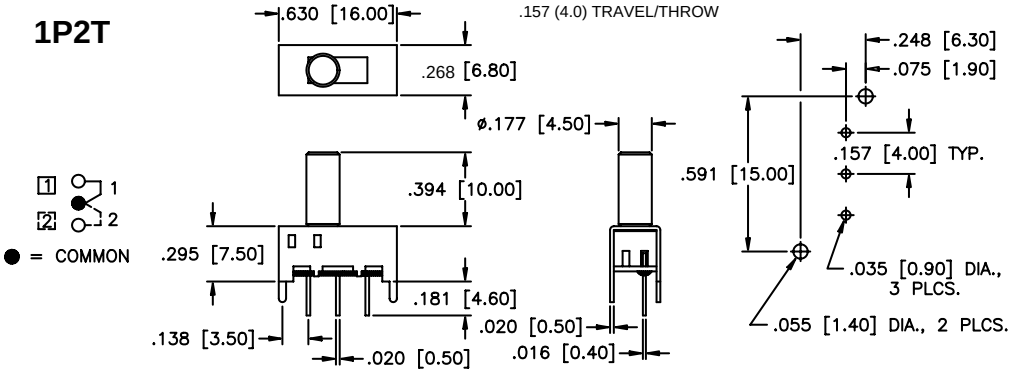

SCHEMATIC MECHANICAL OUTLINE P.C. BOARD LAYOUT

MODEL NO.
MHS133K

VERTICAL ACTUATOR

1P3T

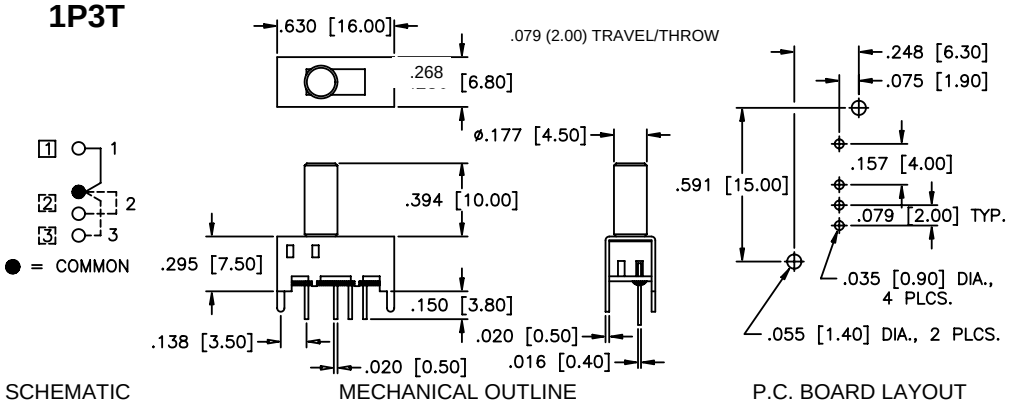

SCHEMATIC MECHANICAL OUTLINE P.C. BOARD LAYOUT

SPECIFICATIONS SUBJECT TO CHANGE WITHOUT NOTICE

APEM, PO BOX 8288, HAVERHILL, MA USA 01835-0788 TOLL FREE: (877) 246-7890 FAX: (978) 372-3534 E-mail: info@apem.com

MHS Series

Miniature Slide Switches

with aluminum actuator

SPECIFICATIONS SUBJECT TO CHANGE WITHOUT NOTICE

MODEL NO.

MHS222K

VERTICAL ACTUATOR

2P2T

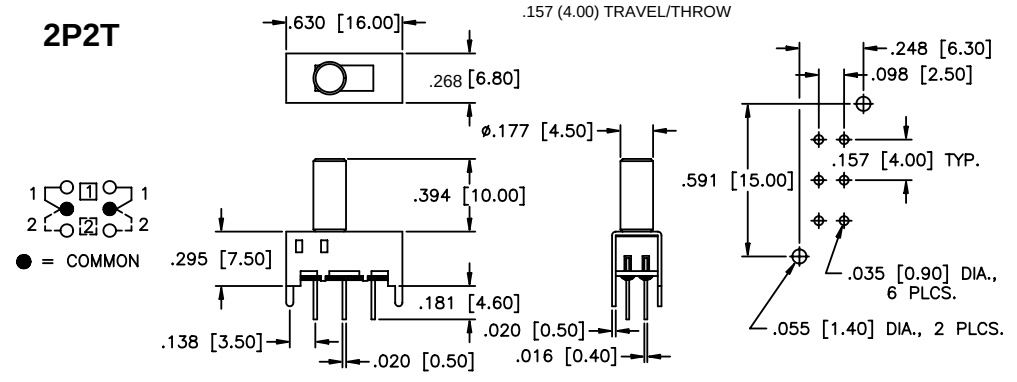

SCHEMATIC MECHANICAL OUTLINE P.C. BOARD LAYOUT

MODEL NO.

MHS223K

VERTICAL ACTUATOR

2P2T w/center OFF

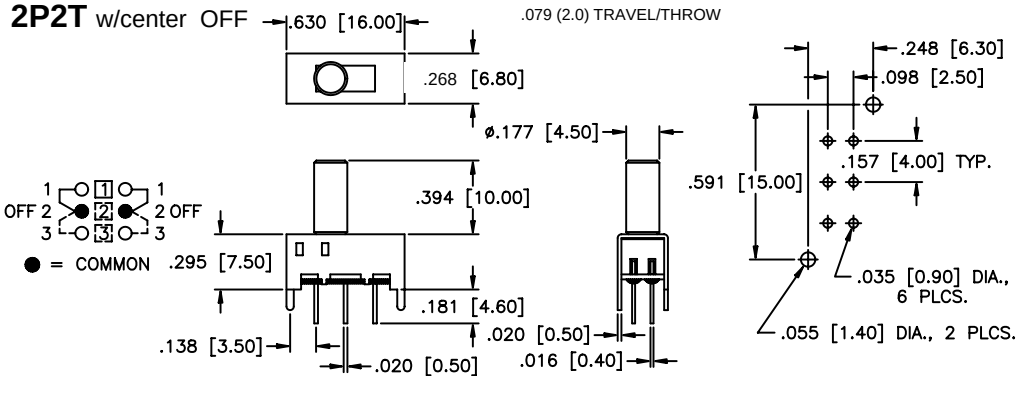

SCHEMATIC MECHANICAL OUTLINE P.C. BOARD LAYOUT

MODEL NO.

MHS233K

VERTICAL ACTUATOR

2P3T

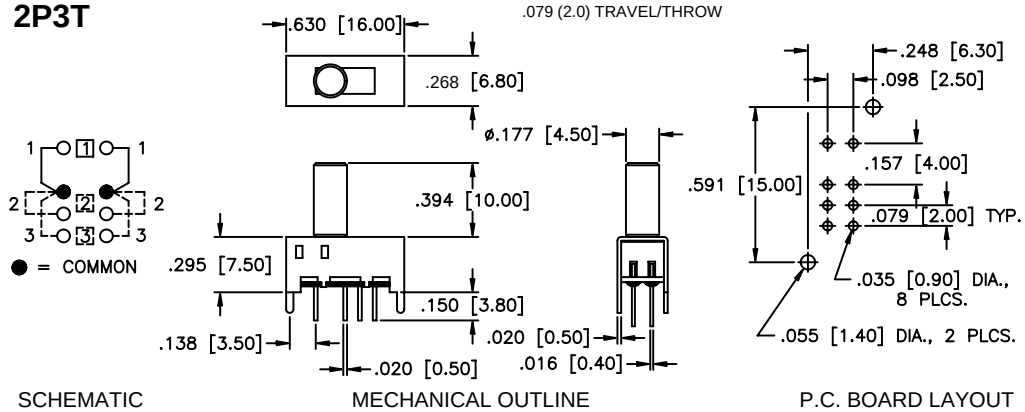

SCHEMATIC MECHANICAL OUTLINE P.C. BOARD LAYOUT

O

New!

MHS Series

Miniature Slide Switches

SPECIFICATIONS

Contact rating: 300 mA at 30 VDC
Initial contact resistance: 20 milliohms max.
Insulation resistance: 100 megohms min. at 500 VDC
Dielectric strength: 500 VAC for 1 minute
Electrical life: 10,000 cycles min.
Operating temperature range: -20°C to +85°C
Solder heat resistance: 260°C max. for 3 seconds
Actuation force: 250 ±150 grams
Solvent washing permissible

FEATURES

- **Miniature compact size.**
- **Wash-through open frame construction.**
- **Positive spring loaded ball detent mechanism.**
- **Epoxy sealed terminals.**

MATERIALS

Contacts & terminals: Silver plated brass
Housing: Tin plated steel
Actuator: Polyacetal
Base: Phenolic laminated sheet **Terminal seal:** Epoxy

SPECIFICATIONS SUBJECT TO CHANGE WITHOUT NOTICE

O

MODEL NO.
MHS122

VERTICAL ACTUATOR

1P2T

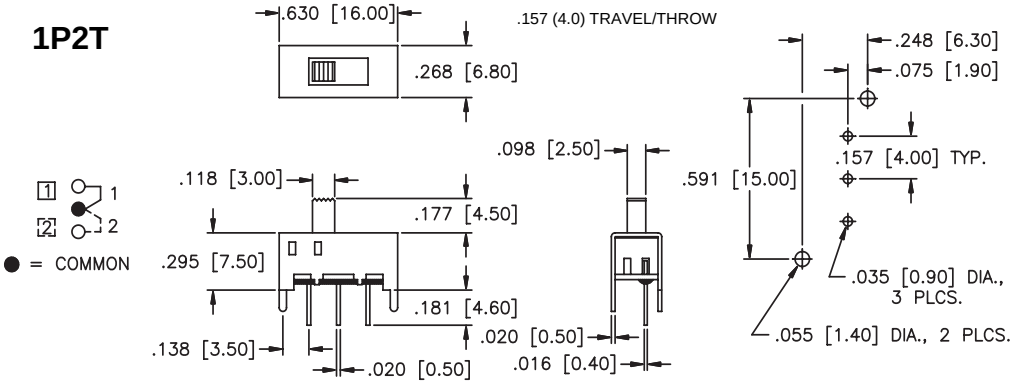

SCHEMATIC MECHANICAL OUTLINE P.C. BOARD LAYOUT

MODEL NO.
MHS123

VERTICAL ACTUATOR

1P2T w/center OFF

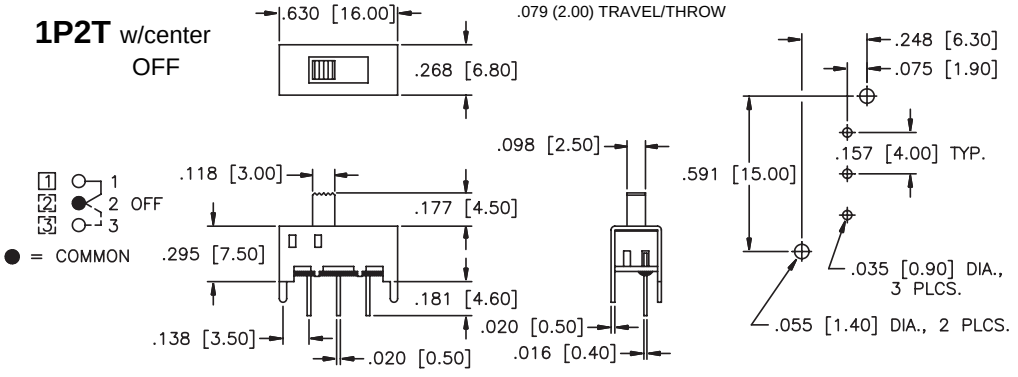

SCHEMATIC MECHANICAL OUTLINE P.C. BOARD LAYOUT

MODEL NO.
MHS133

VERTICAL ACTUATOR

1P3T

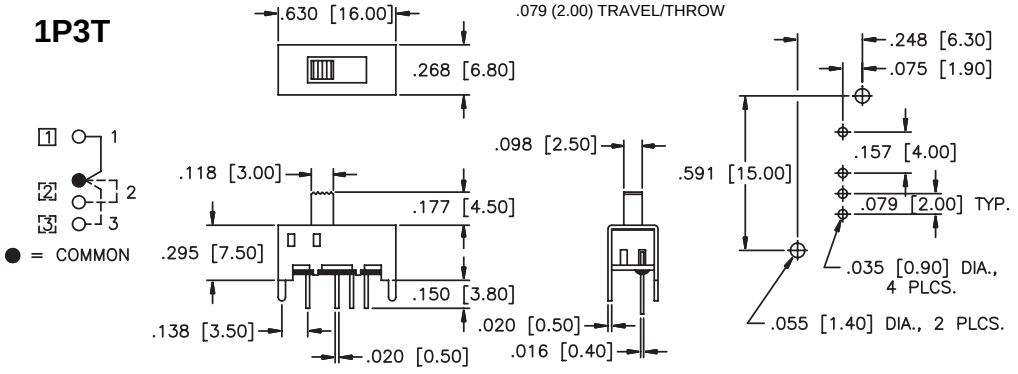

SCHEMATIC MECHANICAL OUTLINE P.C. BOARD LAYOUT

APEM, PO BOX 8288, HAVERHILL, MA USA 01835-0788 TOLL FREE: (877) 246-7890 FAX: (978) 372-3534 E-mail: info@apem.com

MHS Series
Miniature Slide Switches

New!

SPECIFICATIONS SUBJECT TO CHANGE WITHOUT NOTICE

MODEL NO.

MHS222

VERTICAL ACTUATOR

2P2T

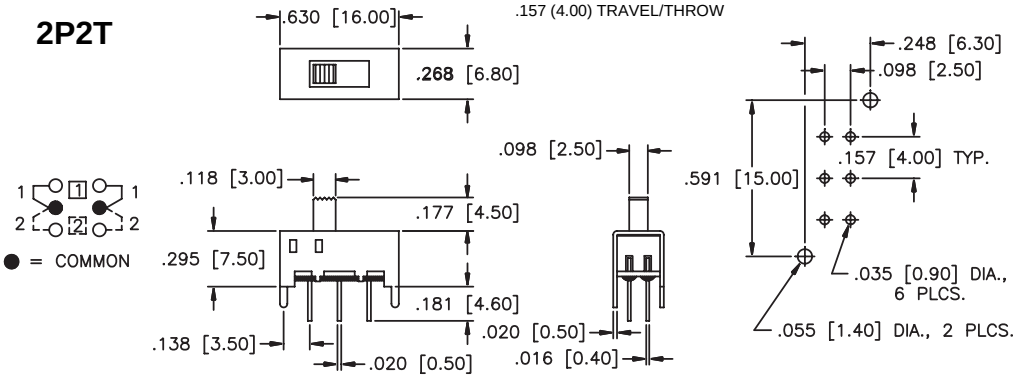

SCHEMATIC MECHANICAL OUTLINE P.C. BOARD LAYOUT

MODEL NO.

MHS223

VERTICAL ACTUATOR

2P2T w/center OFF

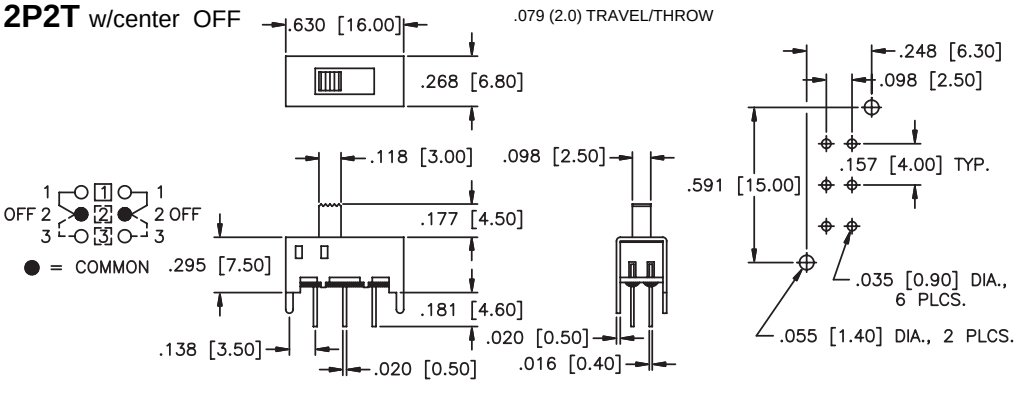

SCHEMATIC MECHANICAL OUTLINE P.C. BOARD LAYOUT

MHS233

VERTICAL ACTUATOR

2P3T

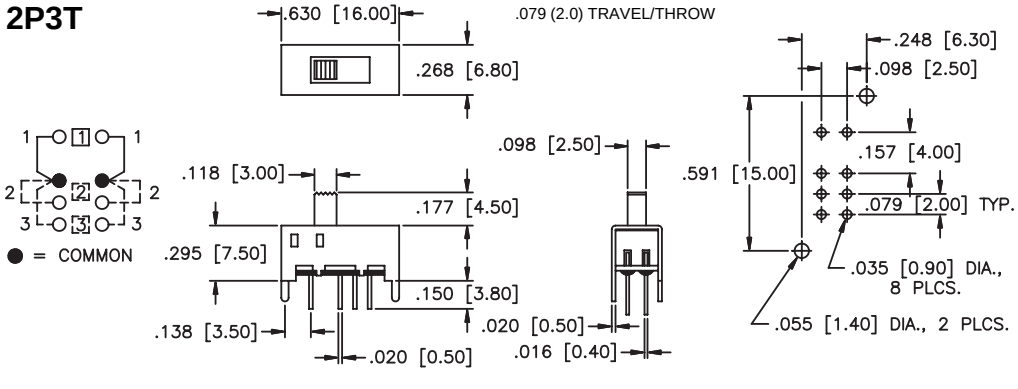

SCHEMATIC MECHANICAL OUTLINE P.C. BOARD LAYOUT

O

SLB Series

(with p.c. board stand-off bracket)

Miniature Slide Switches

SPECIFICATIONS

Contact ratings: 300 mA at 125 VAC or 30 VDC
Initial contact resistance: 20 milliohms max.
Insulation resistance: 100 megohms min. at 500 VDC
Dielectric strength: 500 volts RMS for 1 minute
Electrical life: 10,000 cycles min.
Operating temperature range: -20°C to +85°C
Actuation force: 220g ± 100g
Solder heat resistance: 260°C max. for 3 seconds
Solvent washing permissible

FEATURES

- **Miniature compact size.**
- **Wash-through open frame construction.**
- **Positive spring loaded ball detent mechanism.**
- **Epoxy sealed terminals.**

MATERIALS

Contacts & terminals: Silver plated
Frame: Zinc plated steel
Actuator: Thermoplastic
Base: Phenolic laminated sheet **Terminal seal:** Epoxy

O

SPECIFICATIONS SUBJECT TO CHANGE WITHOUT NOTICE

MODEL NO.
SLB12814

VERTICAL ACTUATOR

1P2T

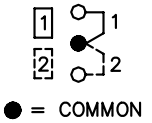

SCHEMATIC

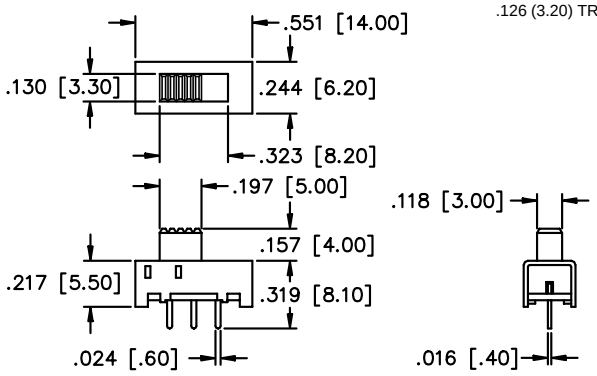

MECHANICAL OUTLINE

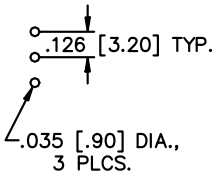

P.C. BOARD LAYOUT

MODEL NO.
SLB1281R5

RIGHT ANGLE ACTUATOR

1P2T

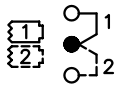

SCHEMATIC

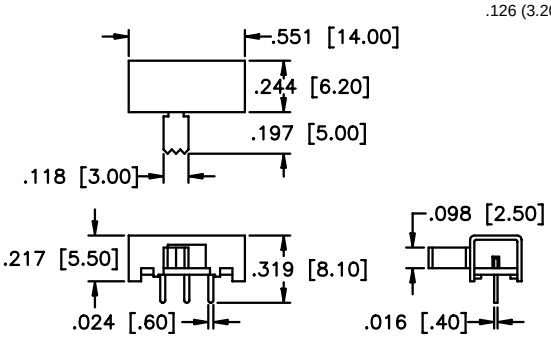

MECHANICAL OUTLINE

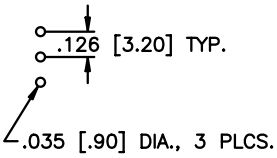

P.C. BOARD LAYOUT

MODEL NO.
SLB1370

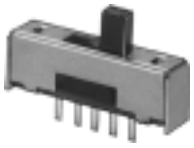

VERTICAL ACTUATOR

1P3T

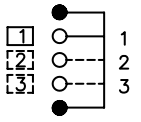

SCHEMATIC

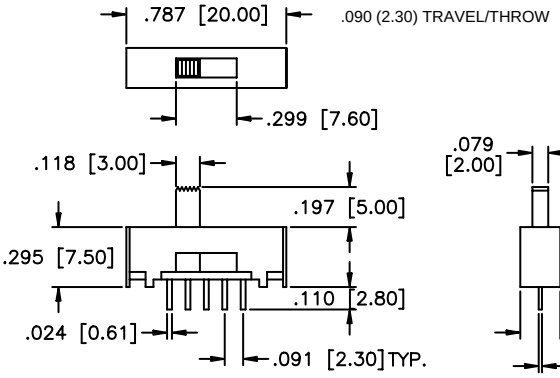

MECHANICAL OUTLINE

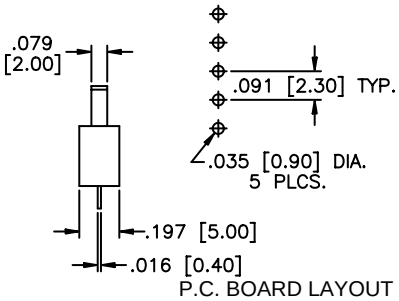

P.C. BOARD LAYOUT

APEM, PO BOX 8288, HAVERHILL, MA USA 01835-0788 TOLL FREE: (877) 246-7890 FAX: (978) 372-3534 E-mail: info@apem.com

SLB Series

(with p.c. board stand-off bracket)

Miniature Slide Switches

SPECIFICATIONS SUBJECT TO CHANGE WITHOUT NOTICE

MODEL NO.

SLB13814

VERTICAL ACTUATOR

1P3T

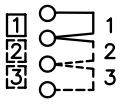

SCHEMATIC

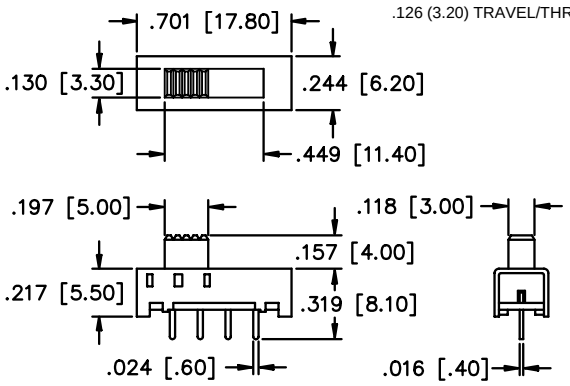

MECHANICAL OUTLINE

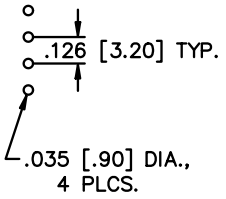

P.C. BOARD LAYOUT

MODEL NO.

SLB1381R5

RIGHT ANGLE ACTUATOR

1P3T

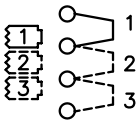

SCHEMATIC

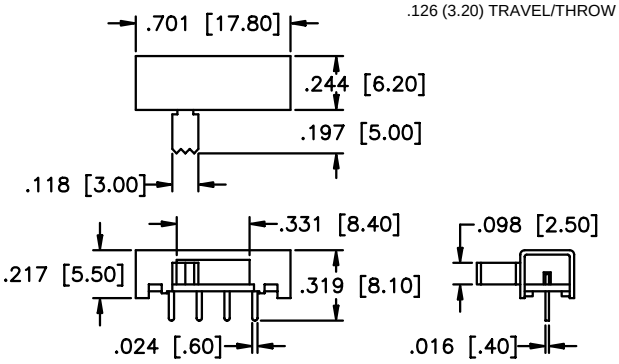

MECHANICAL OUTLINE

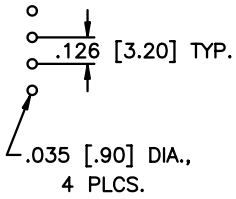

P.C. BOARD LAYOUT

MODEL NO.

SLB1470

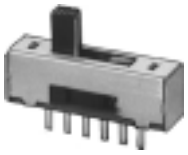

VERTICAL ACTUATOR

1P4T

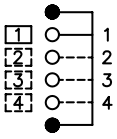

SCHEMATIC

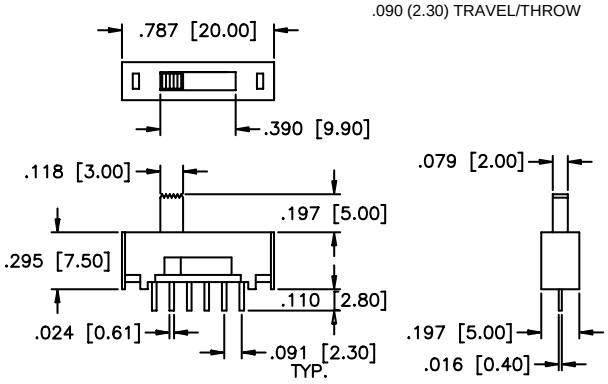

MECHANICAL OUTLINE

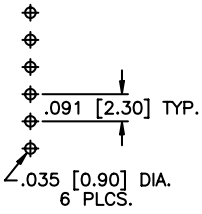

P.C. BOARD LAYOUT

MODEL NO.

SLB1570

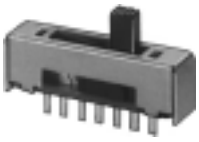

VERTICAL ACTUATOR

1P5T

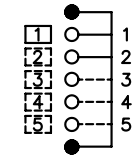

SCHEMATIC

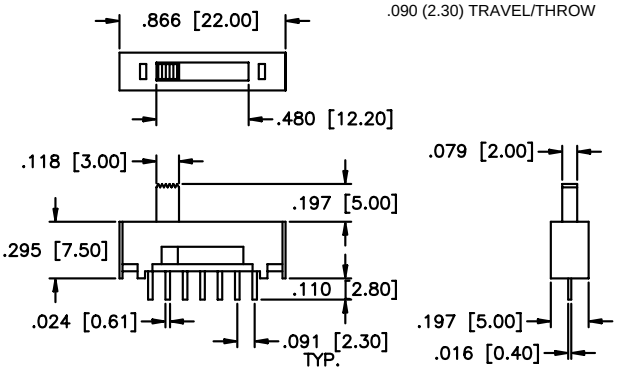

MECHANICAL OUTLINE

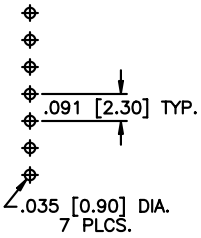

P.C. BOARD LAYOUT

O

SLB Series

(with p.c. board stand-off bracket)

Miniature Slide Switches

O

MODEL NO.

SLB22814

VERTICAL ACTUATOR

2P2T

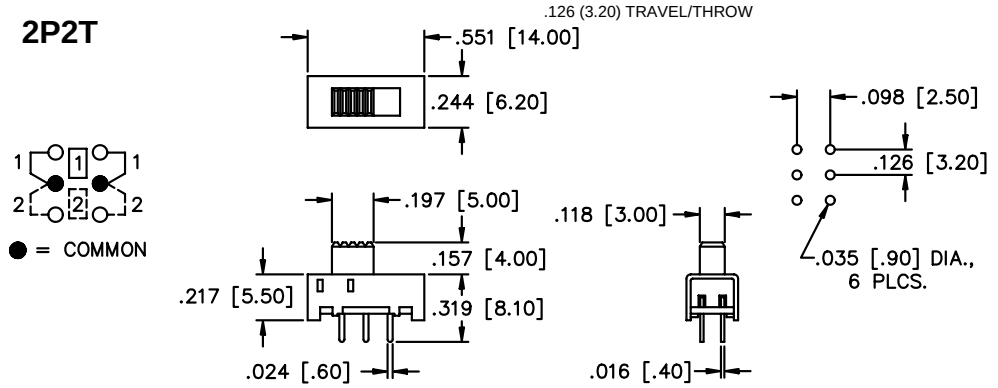

SCHEMATIC MECHANICAL OUTLINE P.C. BOARD LAYOUT

MODEL NO.

SLB2281R5

RIGHT ANGLE ACTUATOR

2P2T

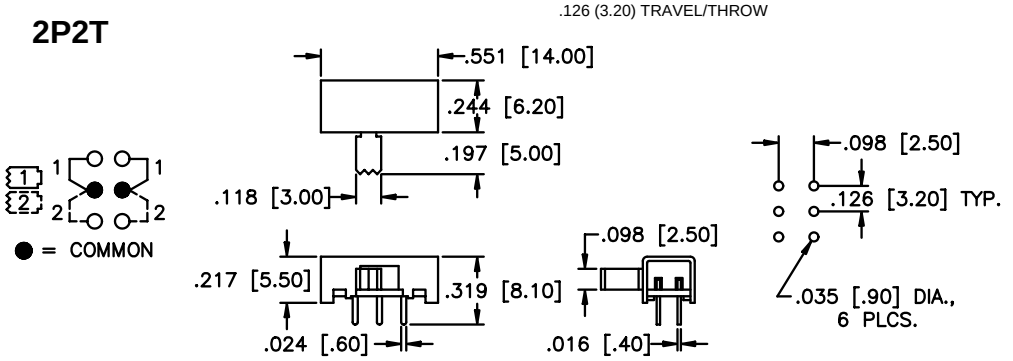

SCHEMATIC MECHANICAL OUTLINE P.C. BOARD LAYOUT

MODEL NO.

SLB23814

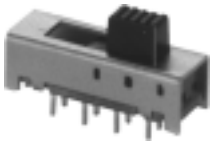

VERTICAL ACTUATOR

2P3T

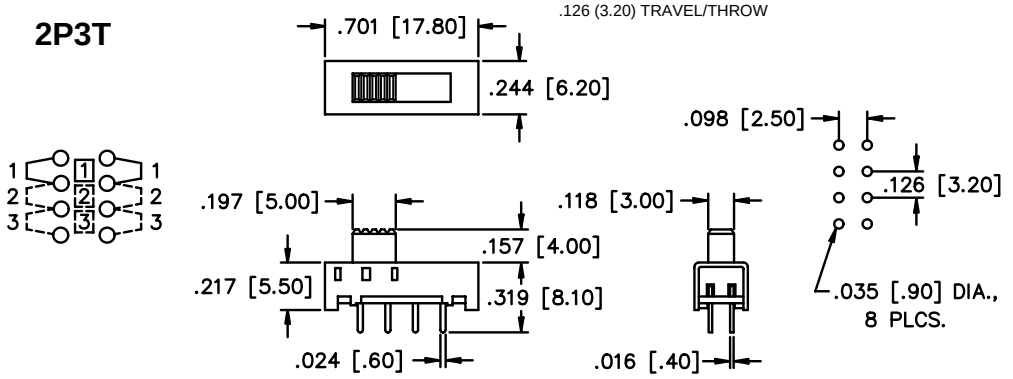

SCHEMATIC MECHANICAL OUTLINE P.C. BOARD LAYOUT

MODEL NO.

SLB2381R5

RIGHT ANGLE ACTUATOR

2P3T

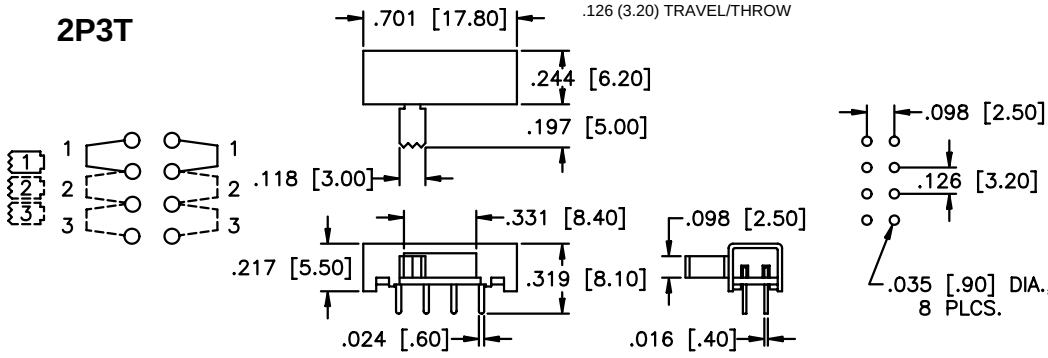

SCHEMATIC MECHANICAL OUTLINE P.C. BOARD LAYOUT

SPECIFICATIONS SUBJECT TO CHANGE WITHOUT NOTICE

APEM, PO BOX 8288, HAVERHILL, MA USA 01835-0788 TOLL FREE: (877) 246-7890 FAX: (978) 372-3534 E-mail: info@apem.com

SLB Series

(with thru- p.c. board hole mounting bracket)

Miniature Slide Switches

SPECIFICATIONS SUBJECT TO CHANGE WITHOUT NOTICE

SPECIFICATIONS

Contact ratings: 300 mA at 125 VAC or 30 VDC
Initial contact resistance: 20 milliohms max.
Insulation resistance: 100 megohms min. at 500 VDC
Dielectric strength: 500 volts RMS for 1 minute
Electrical life: 10,000 cycles min.
Operating temperature range: -20°C to +85°C
Actuation force: 220g ± 100g
Solder heat resistance: 260°C max. for 3 seconds
Solvent washing permissible

FEATURES

- **Miniature compact size.**
- **Wash-through open frame construction.**
- **Positive spring loaded ball detent mechanism.**
- **Epoxy sealed terminals.**

MATERIALS

Contacts & terminals: Silver plated
Frame: Zinc plated steel
Actuator: Thermoplastic
Base: Phenolic laminated sheet **Terminal seal:** Epoxy

O

MODEL NO.
SLB12804

VERTICAL ACTUATOR

1P2T

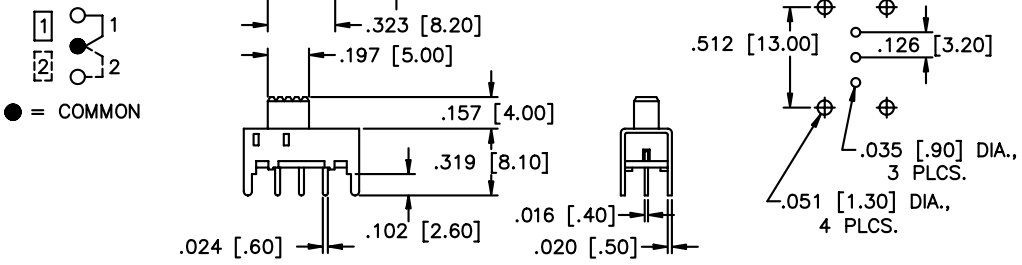

SCHEMATIC MECHANICAL OUTLINE P.C. BOARD LAYOUT

MODEL NO.
SLB124145

VERTICAL ACTUATOR

1P2T

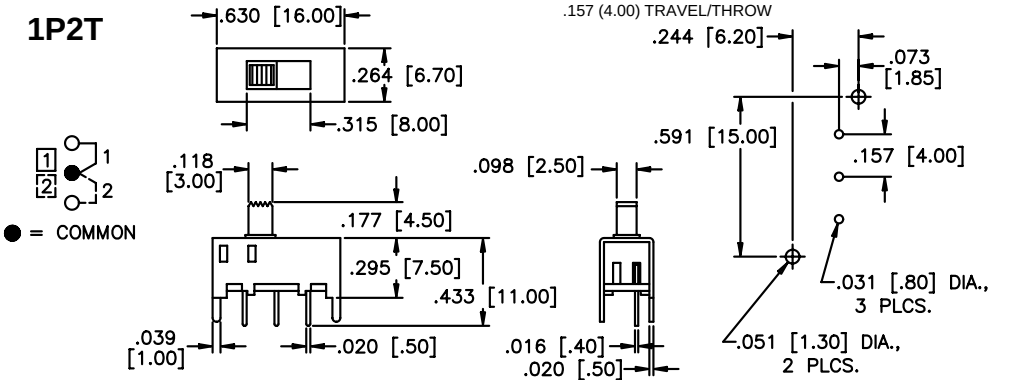

SCHEMATIC MECHANICAL OUTLINE P.C. BOARD LAYOUT

MODEL NO.
SLB1240R45

RIGHT ANGLE ACTUATOR

1P2T

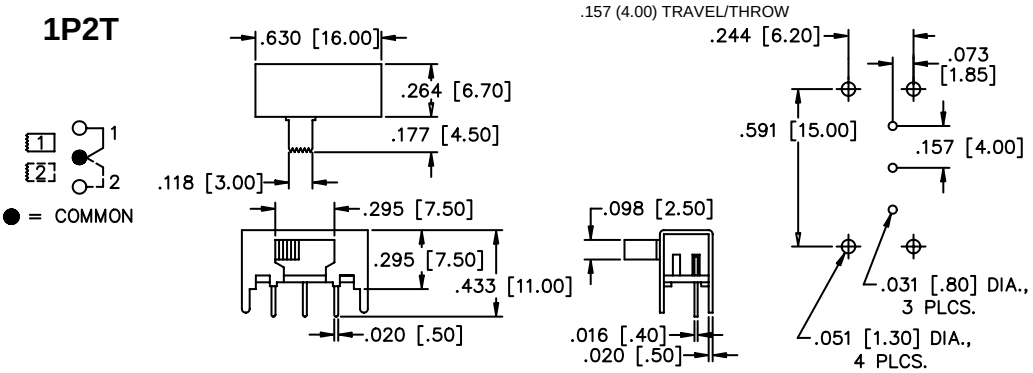

SCHEMATIC MECHANICAL OUTLINE P.C. BOARD LAYOUT

SLB Series

(with thru- p.c. board hole mounting bracket)

Miniature Slide Switches

O

MODEL NO.	
SLB1280R5	1P2T

RIGHT ANGLE ACTUATOR

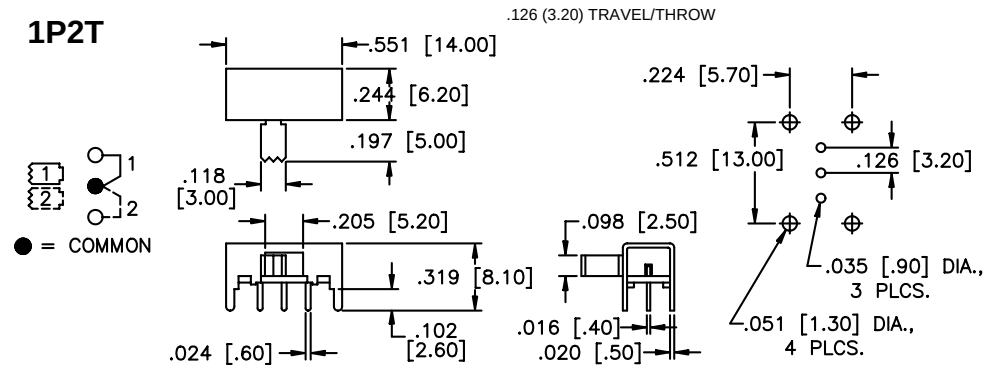

SCHEMATIC MECHANICAL OUTLINE P.C. BOARD LAYOUT

MODEL NO.	
SLB1250R8	1P2T

RIGHT ANGLE ACTUATOR

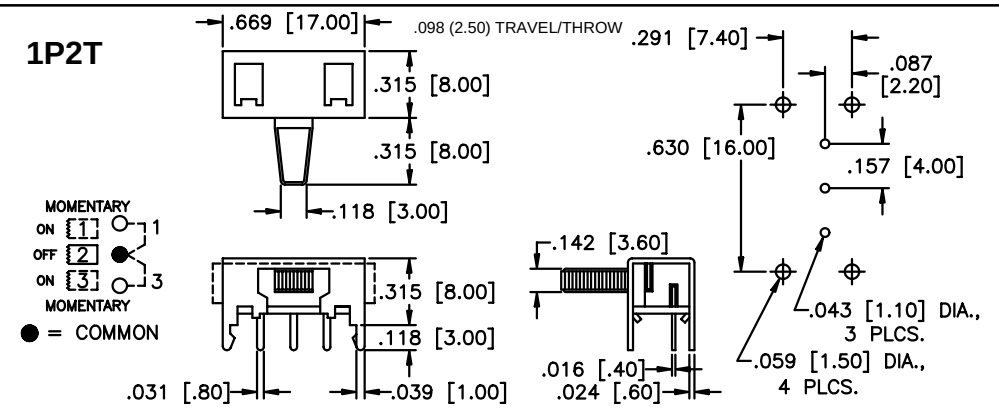

SCHEMATIC MECHANICAL OUTLINE P.C. BOARD LAYOUT

MODEL NO.	
SLB1370R	1P3T

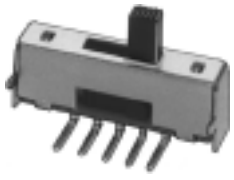

RIGHT ANGLE ACTUATOR

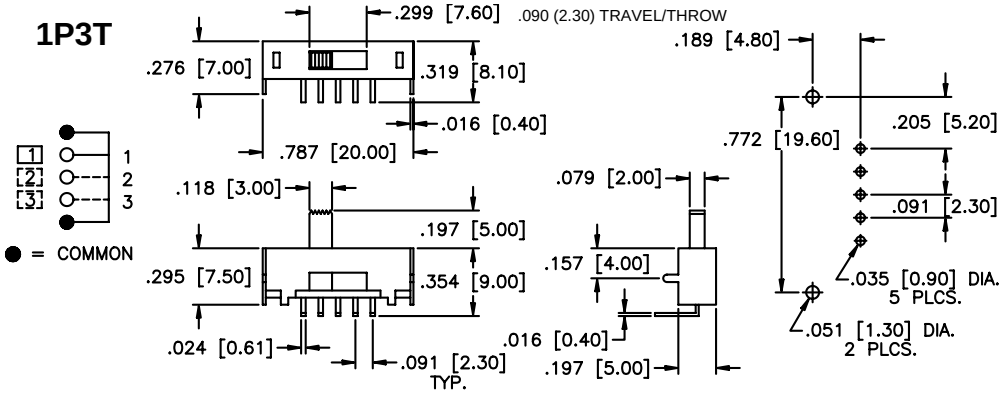

SCHEMATIC MECHANICAL OUTLINE P.C. BOARD LAYOUT

MODEL NO.	
SLB13804	1P3T

VERTICAL ACTUATOR

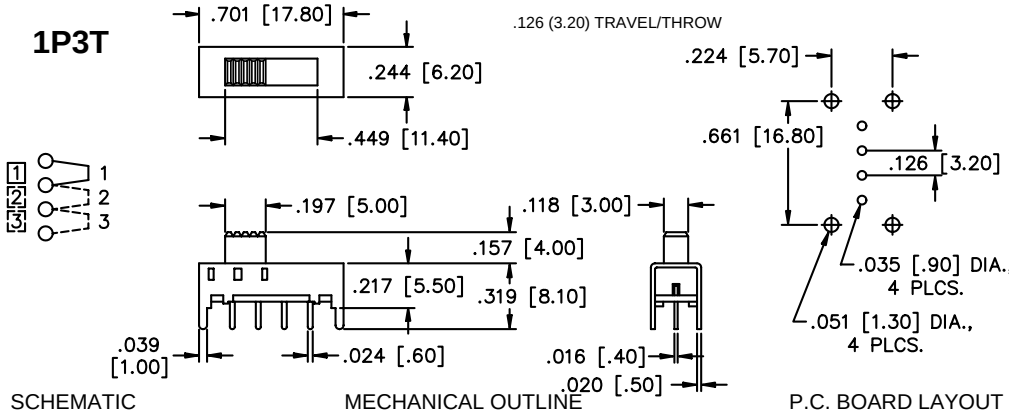

SCHEMATIC MECHANICAL OUTLINE P.C. BOARD LAYOUT

SPECIFICATIONS SUBJECT TO CHANGE WITHOUT NOTICE

APEM, PO BOX 8288, HAVERHILL, MA USA 01835-0788 TOLL FREE: (877) 246-7890 FAX: (978) 372-3534 E-mail: info@apem.com

SLB Series

(with thru-p.c. board hole mounting bracket)

Miniature Slide Switches

SPECIFICATIONS SUBJECT TO CHANGE WITHOUT NOTICE

MODEL NO.

SLB134145

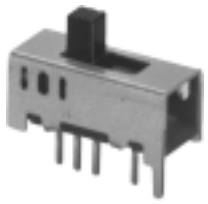

VERTICAL ACTUATOR

1P3T

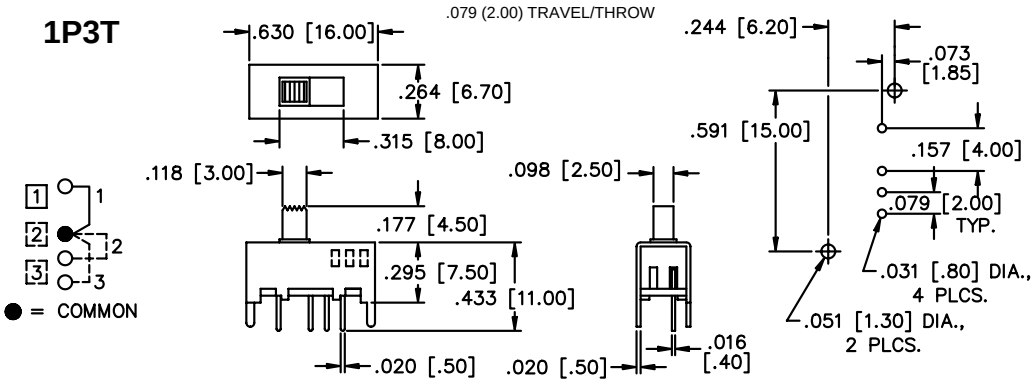

SCHEMATIC MECHANICAL OUTLINE P.C. BOARD LAYOUT

MODEL NO.

SLB1340R45

RIGHT ANGLE ACTUATOR

1P3T

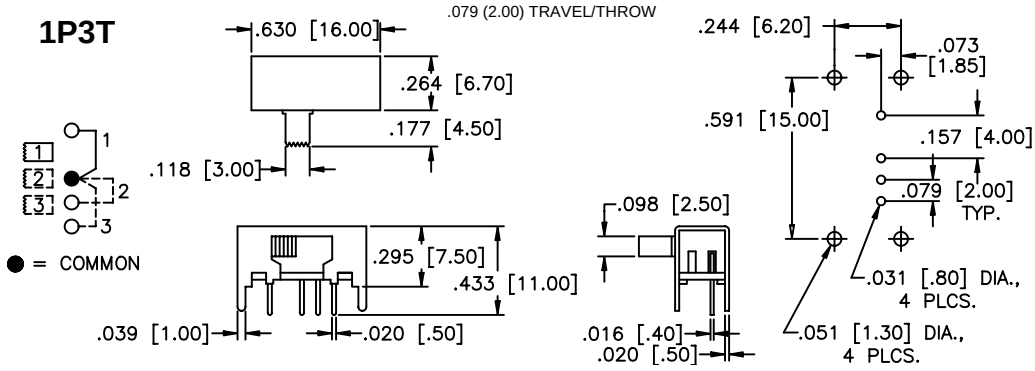

SCHEMATIC MECHANICAL OUTLINE P.C. BOARD LAYOUT

MODEL NO.

SLB1380R5

RIGHT ANGLE ACTUATOR

1P3T

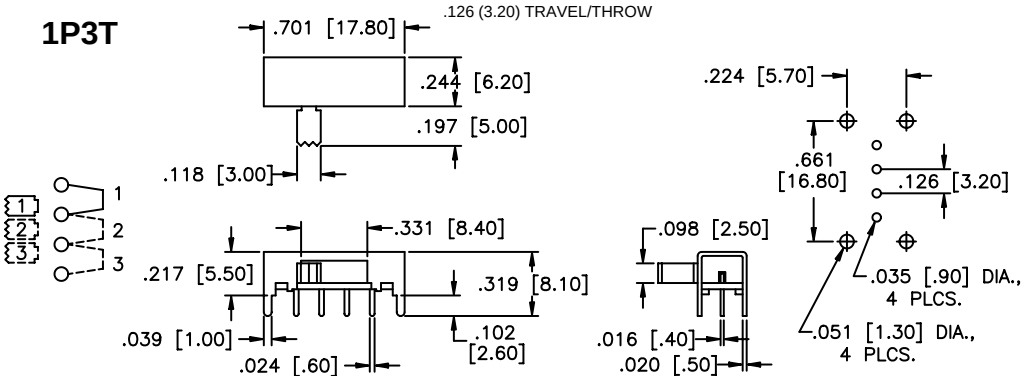

SCHEMATIC MECHANICAL OUTLINE P.C. BOARD LAYOUT

MODEL NO.

SLB1470R

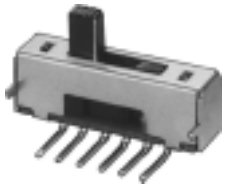

RIGHT ANGLE ACTUATOR

1P4T

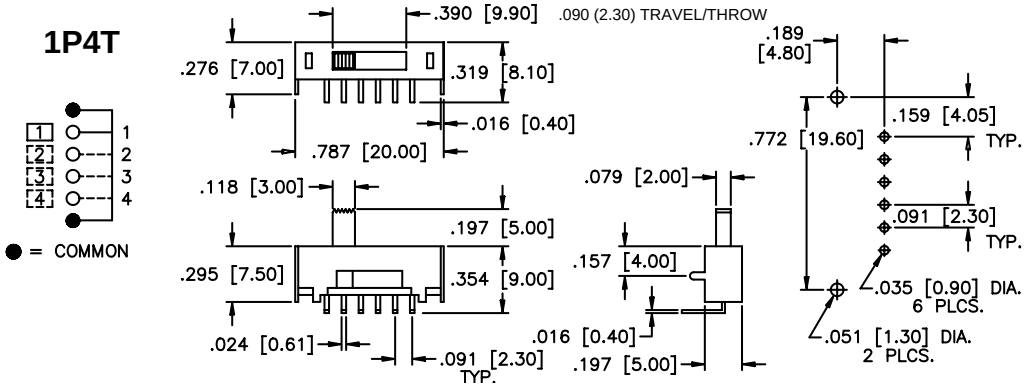

SCHEMATIC MECHANICAL OUTLINE P.C. BOARD LAYOUT

O

SLB Series

(with thru-p.c. board hole mounting bracket)

Miniature Slide Switches

O

SPECIFICATIONS SUBJECT TO CHANGE WITHOUT NOTICE

MODEL NO.

SLB1570R

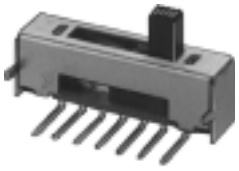

RIGHT ANGLE ACTUATOR

1P5T

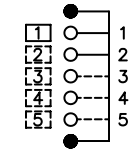

SCHEMATIC

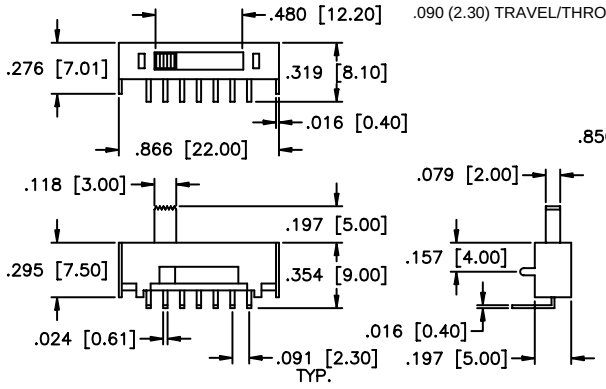

MECHANICAL OUTLINE

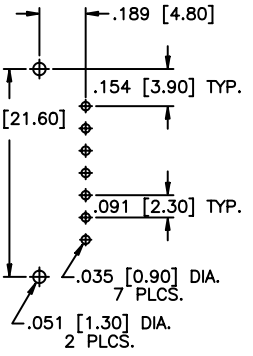

P.C. BOARD LAYOUT

MODEL NO.

SLB22804

VERTICAL ACTUATOR

2P2T

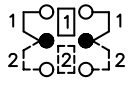

SCHEMATIC

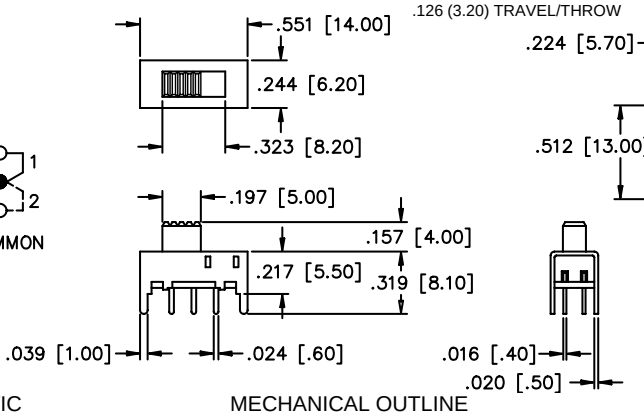

MECHANICAL OUTLINE

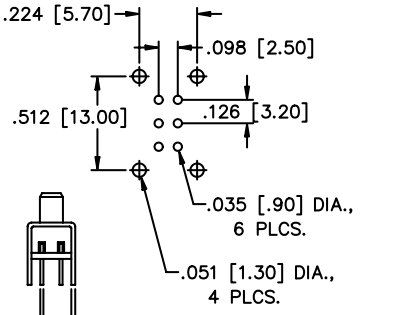

P.C. BOARD LAYOUT

MODEL NO.

SLB224145

VERTICAL ACTUATOR

2P2T

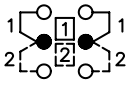

SCHEMATIC

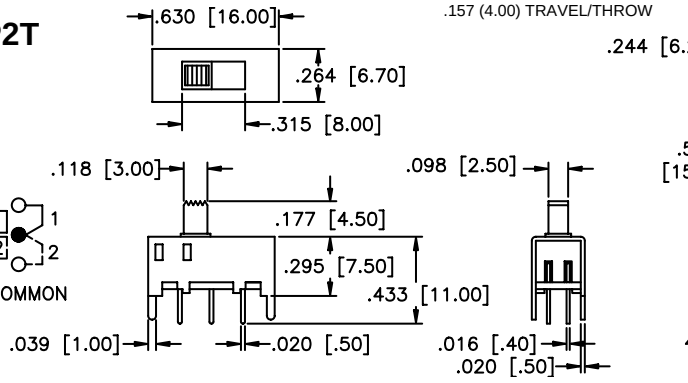

MECHANICAL OUTLINE

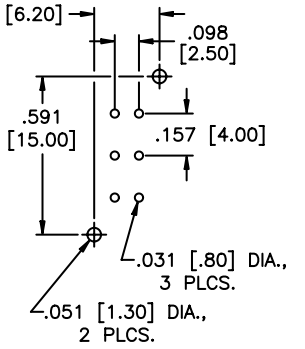

P.C. BOARD LAYOUT

MODEL NO.

SLB2240R45

RIGHT ANGLE ACTUATOR

2P2T

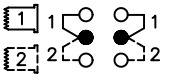

SCHEMATIC

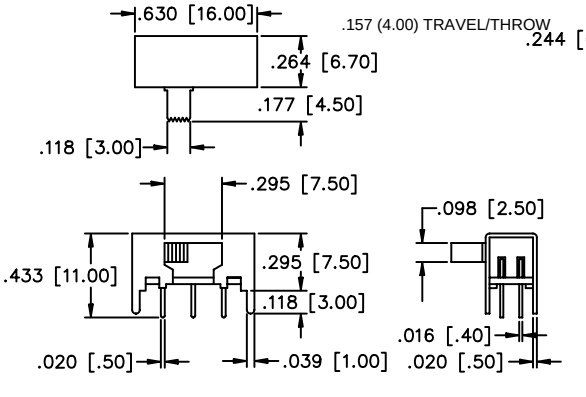

MECHANICAL OUTLINE

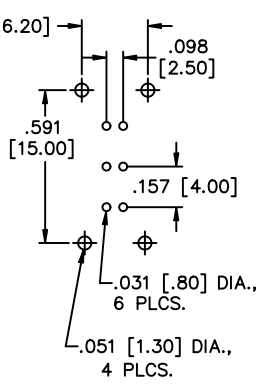

P.C. BOARD LAYOUT

APEM, PO BOX 8288, HAVERHILL, MA USA 01835-0788 TOLL FREE: (877) 246-7890 FAX: (978) 372-3534 E-mail: info@apem.com

SLB Series

(with thru-p.c. board hole mounting bracket)

Miniature Slide Switches

SPECIFICATIONS SUBJECT TO CHANGE WITHOUT NOTICE

MODEL NO.

SLB2280R5

RIGHT ANGLE ACTUATOR

2P2T

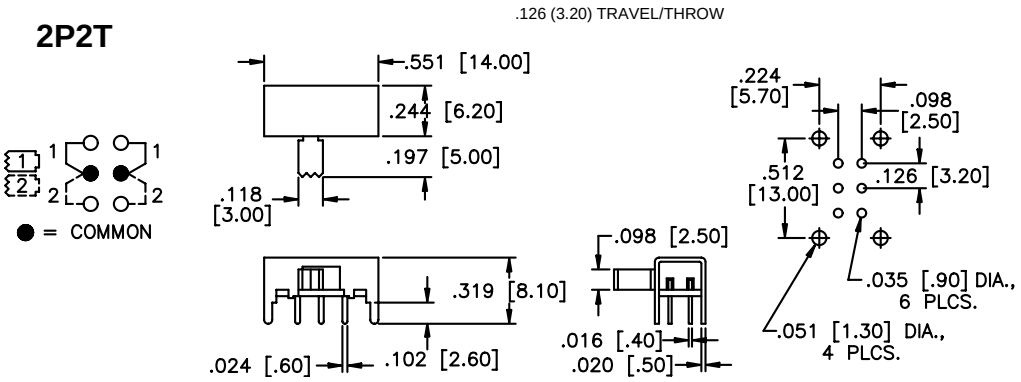

SCHEMATIC MECHANICAL OUTLINE P.C. BOARD LAYOUT

MODEL NO.

SLB23804

VERTICAL ACTUATOR

2P3T

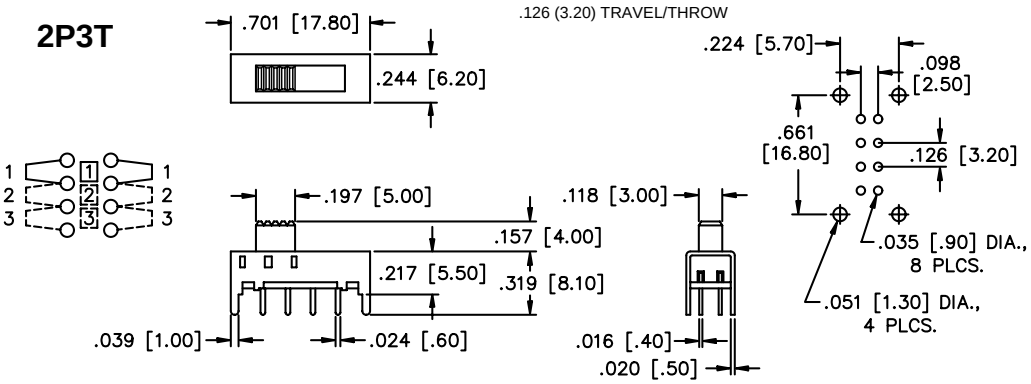

SCHEMATIC MECHANICAL OUTLINE P.C. BOARD LAYOUT

MODEL NO.

SLB234145

VERTICAL ACTUATOR

2P3T

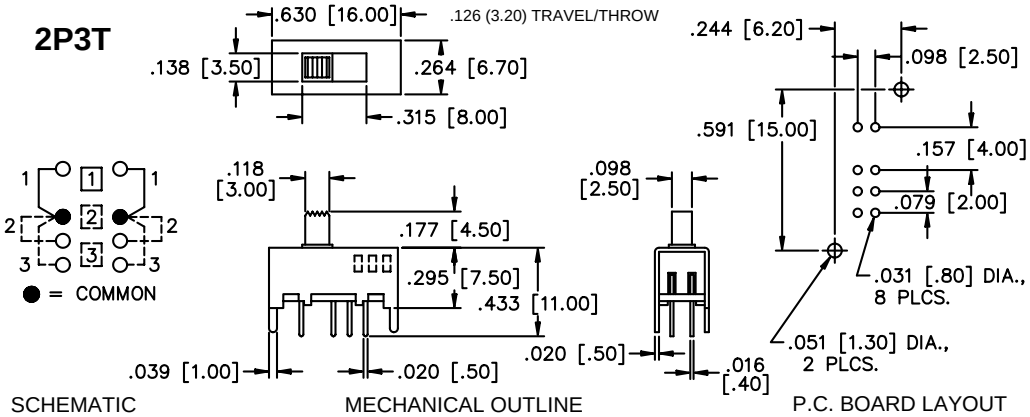

SCHEMATIC MECHANICAL OUTLINE P.C. BOARD LAYOUT

MODEL NO.

SLB2340R45

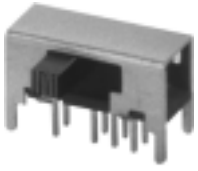

RIGHT ANGLE ACTUATOR

2P3T

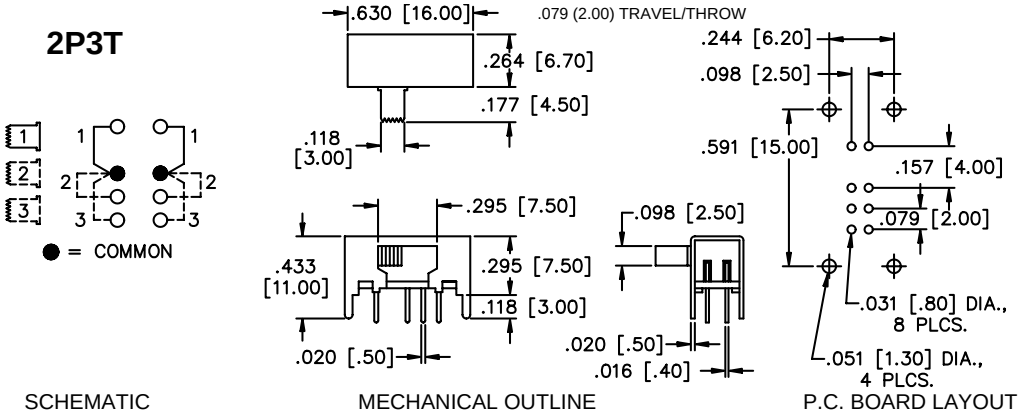

SCHEMATIC MECHANICAL OUTLINE P.C. BOARD LAYOUT

O

SLC Series

Miniature Slide Switches

SPECIFICATIONS

Contact ratings: 300 mA at 125 VAC or 30 VDC
Initial contact resistance: 20 milliohms max.
Insulation resistance: 100 megohms min. at 500 VDC
Dielectric strength: 500 volts RMS for 1 minute
Electrical life: 10,000 cycles min.
Operating temperature range: -20°C to +85°C
Actuation force: 220g ± 100g
Solder heat resistance: 260°C max. for 3 seconds
Solvent washing permissible

FEATURES

- **Panel mounting with solder lug terminals.**
- **Wash-through open frame construction.**
- **Positive spring loaded ball detent mechanism.**

MATERIALS

Contacts & terminals: Silver plated
Frame: Zinc plated steel
Actuator: Thermoplastic
Base: Phenolic laminated sheet

SPECIFICATIONS SUBJECT TO CHANGE WITHOUT NOTICE

O

MODEL NO.
SLC12007

1P2T

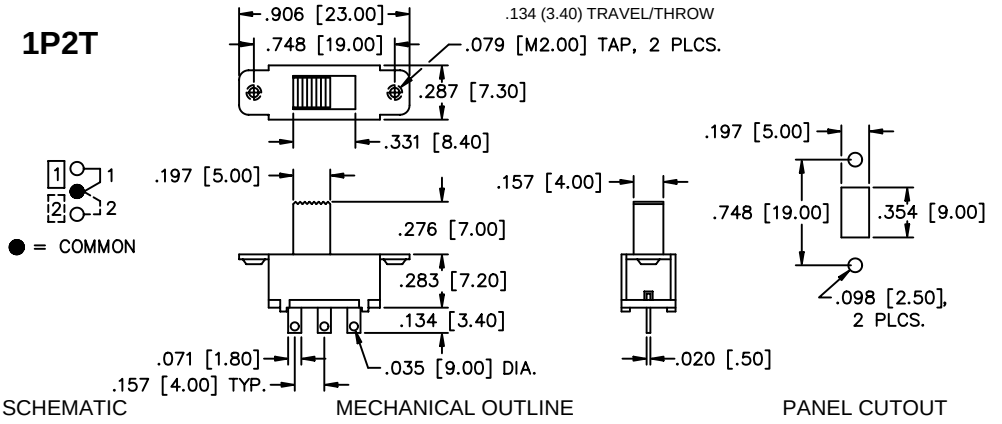

MODEL NO.
SLC120025

1P2T

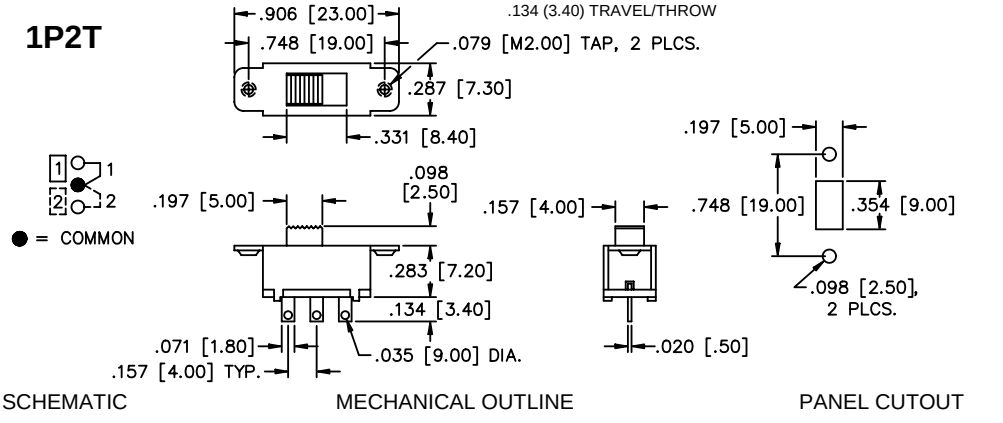

MODEL NO.
SLC22007

2P2T

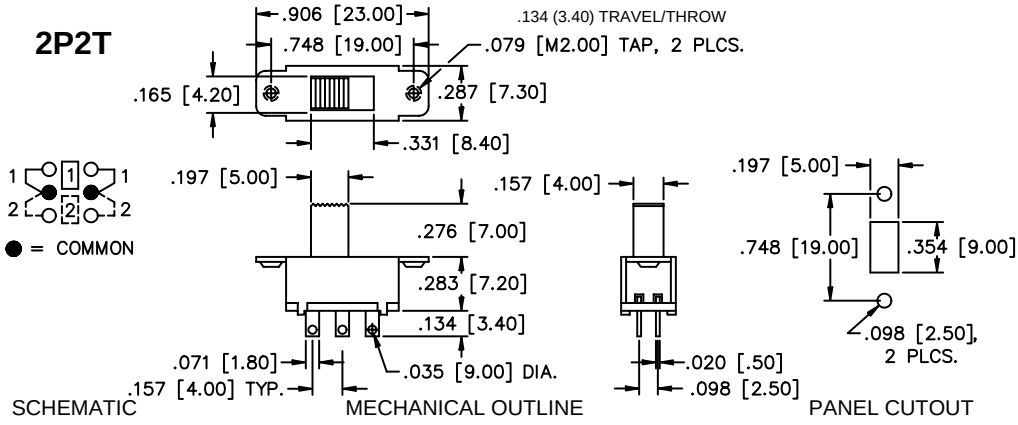

APEM, PO BOX 8288, HAVERHILL, MA USA 01835-0788 TOLL FREE: (877) 246-7890 FAX: (978) 372-3534 E-mail: info@apem.com

SLG Series

Miniature Slide Switches

SPECIFICATIONS SUBJECT TO CHANGE WITHOUT NOTICE

SPECIFICATIONS

Contact ratings: 300 mA at 125 VAC or 30 VDC
Initial contact resistance: 20 milliohms max.
Insulation resistance: 100 megohms min. at 500 VDC
Dielectric strength: 500 volts RMS for 1 minute
Electrical life: 10,000 cycles min.
Operating temperature range: -20°C to +85°C
Actuation force: 200g ± 75g
Solder heat resistance: 260°C max. for 3 seconds
Solvent washing permissible

FEATURES

- **Wash-through open frame construction.**
- **Panel and p.c. mounting models.**
- **Positive spring loaded ball detent mechanism.**

MATERIALS

Contacts & terminals: Silver plated
Frame: Zinc plated steel
Actuator: Thermoplastic
Base: Phenolic laminated sheet

O

MODEL NO.
SLG12004

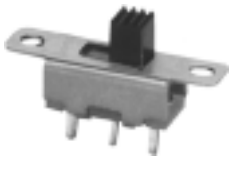

1P2T

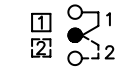

SCHEMATIC

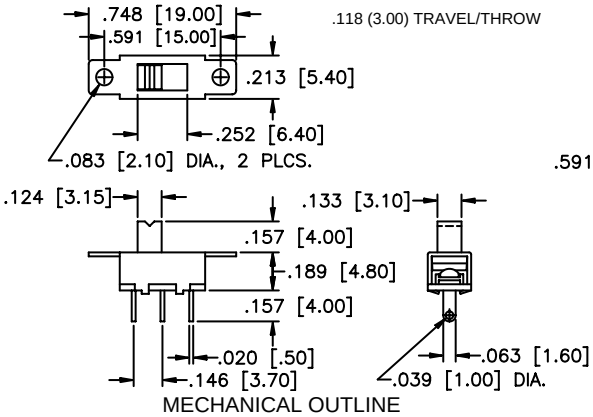

MECHANICAL OUTLINE

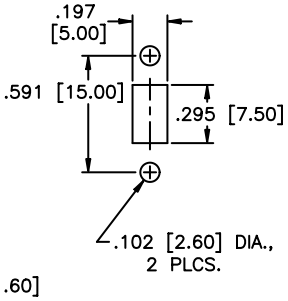

PANEL CUTOUT

MODEL NO.
SLG12014

VERTICAL MOUNTING

1P2T

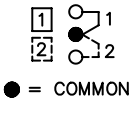

SCHEMATIC

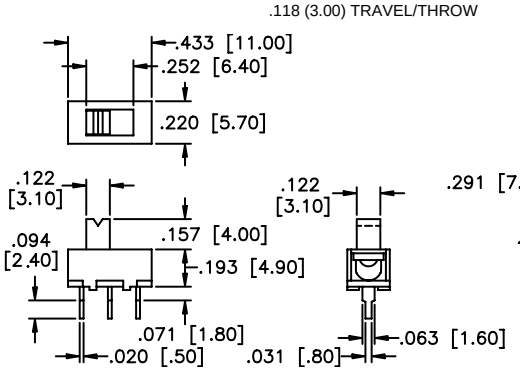

MECHANICAL OUTLINE

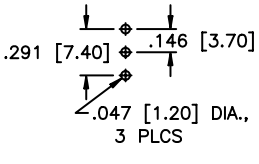

P.C. BOARD LAYOUT

SLA Series

Miniature Slide Switches

SPECIFICATIONS

Contact ratings: 500 mA at 125 VAC
Initial contact resistance: 20 milliohms max.
Insulation resistance: 100 megohms min. at 500 VDC
Dielectric strength: 500 volts RMS for 1 minute
Electrical life: 10,000 cycles min.
Operating temperature range: -20°C to +85°C
Actuation force: 350g ± 200g
Solder heat resistance: 260°C max. for 3 seconds
Solvent washing permissible

FEATURES

- **Miniature compact size.**
- **Wash-through open frame construction.**
- **Panel and p.c. mounting models.**

MATERIALS

Contacts & terminals: Silver plated brass
Frame: Zinc plated steel
Actuator: PBT Thermoplastic
Base: Phenolic laminated sheet

SPECIFICATIONS SUBJECT TO CHANGE WITHOUT NOTICE

O

MODEL NO.
SLA1200

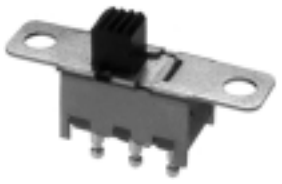

1P2T

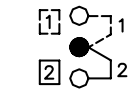

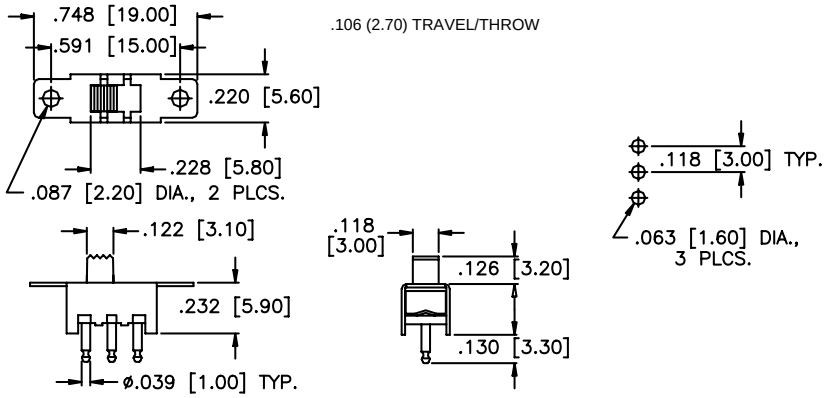

SCHEMATIC MECHANICAL OUTLINE P.C. BOARD LAYOUT

MODEL NO.
SLA1201

1P2T

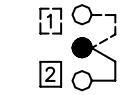

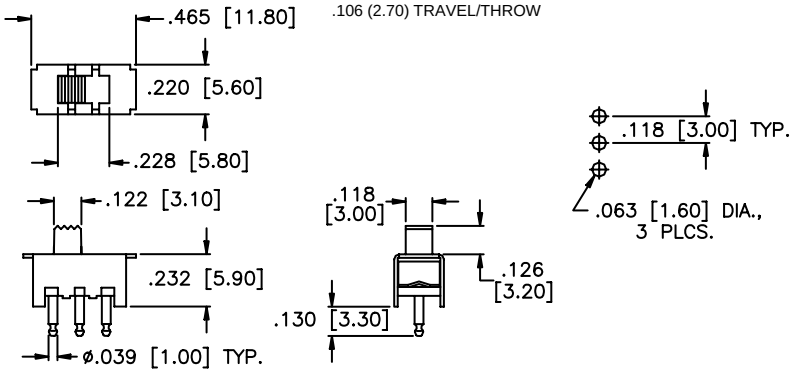

SCHEMATIC MECHANICAL OUTLINE P.C. BOARD LAYOUT

MODEL NO.
SLA2200

2P2T

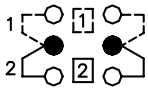

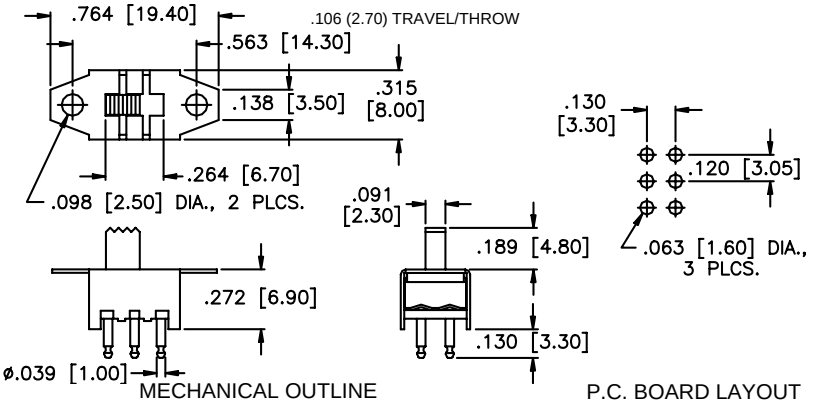

SCHEMATIC MECHANICAL OUTLINE P.C. BOARD LAYOUT

APEM, PO BOX 8288, HAVERHILL, MA USA 01835-0788 TOLL FREE: (877) 246-7890 FAX: (978) 372-3534 E-mail: info@apem.com

MODEL NO.
SLA2201

2P2T

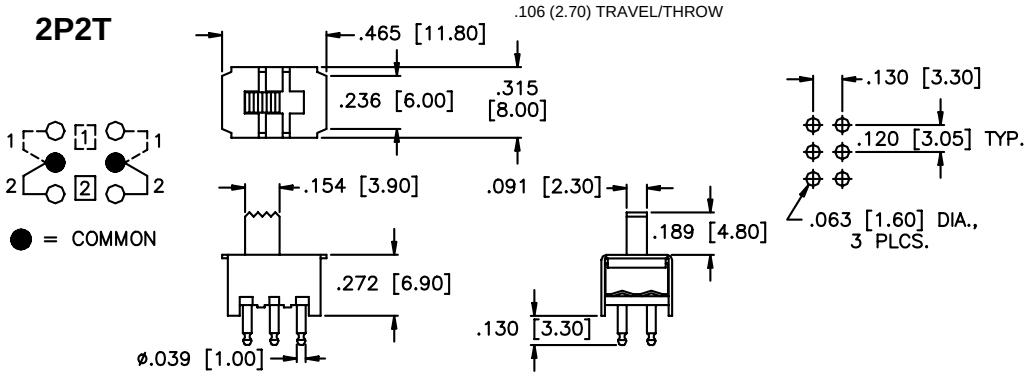

SCHEMATIC MECHANICAL OUTLINE P.C. BOARD LAYOUT

SPECIFICATIONS SUBJECT TO CHANGE WITHOUT NOTICE

O

Компания «ЭлектроПласт» предлагает заключение долгосрочных отношений при поставках импортных электронных компонентов на взаимовыгодных условиях!

Наши преимущества:

- Оперативные поставки широкого спектра электронных компонентов отечественного и импортного производства напрямую от производителей и с крупнейших мировых складов;
- Поставка более 17-ти миллионов наименований электронных компонентов;
- Поставка сложных, дефицитных, либо снятых с производства позиций;
- Оперативные сроки поставки под заказ (от 5 рабочих дней);
- Экспресс доставка в любую точку России;
- Техническая поддержка проекта, помощь в подборе аналогов, поставка прототипов;
- Система менеджмента качества сертифицирована по Международному стандарту ISO 9001;
- Лицензия ФСБ на осуществление работ с использованием сведений, составляющих государственную тайну;
- Поставка специализированных компонентов (Xilinx, Altera, Analog Devices, Intersil, Interpoint, Microsemi, Aeroflex, Peregrine, Syfer, Eurofarad, Texas Instrument, Miteq, Cobham, E2V, MA-COM, Hittite, Mini-Circuits,General Dynamics и др.);

Помимо этого, одним из направлений компании «ЭлектроПласт» является направление «Источники питания». Мы предлагаем Вам помощь Конструкторского отдела:

- Подбор оптимального решения, техническое обоснование при выборе компонента;
- Подбор аналогов;
- Консультации по применению компонента;
- Поставка образцов и прототипов;
- Техническая поддержка проекта;
- Защита от снятия компонента с производства.

Как с нами связаться

Телефон: 8 (812) 309 58 32 (многоканальный)
Факс: 8 (812) 320-02-42
Электронная почта: org@eplast1.ru
Адрес: 198099, г. Санкт-Петербург, ул. Калинина, дом 2, корпус 4, литера А.