General Description

The MAX3109 advanced dual universal asynchronous receiver-transmitter (UART) has 128 words of receive and transmit first-in/first-out (FIFO) and a high-speed SPI or I²C controller interface. The 2x and 4x rate modes allow a maximum of 24Mbps data rates. A phase-locked loop (PLL) and the fractional baud-rate generators allow a high degree of flexibility in baud-rate programming and reference clock selection.

Independent logic-level translation on the transceiver and controller interfaces allows ease of interfacing to microcontrollers, FPGAs, and transceivers that are powered by differing supply voltages. Automatic hardware and software flow control with selectable FIFO interrupt triggering offloads low-level activity from the host controller. Automatic half-duplex transceiver control with programmable setup and hold times allow the MAX3109 to be used in high-speed applications such as PROFIBUSDP. The 128-word FIFOs have advanced FIFO control, reducing host processor data flow management.

The MAX3109 is available in a 32-pin TQFN (5mm x 5mm) package and is specified over the -40°C to +85°C extended temperature range.

Applications

- Handheld Devices
- Power Meters
- Programmable Logic Controllers (PLCs)
- Medical Systems
- Point-of-Sales Systems
- HVAC or Building Control

Functional Diagram

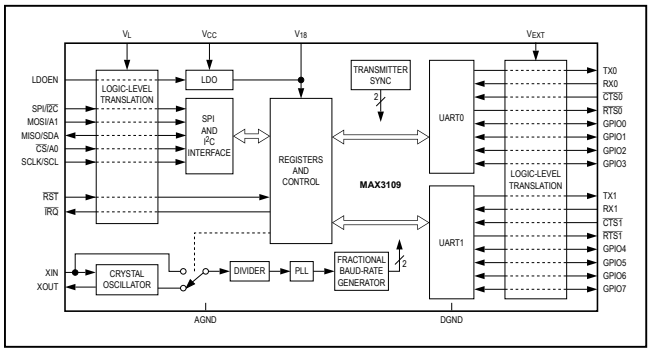

IrDA is a service mark of Infrared Data Association Corporation.

Benefits and Features

- Bridges an SPI/MICROWIRE or I²C Microprocessor Bus to an Asynchronous Interface Such as RS-485, RS-232, or IrDA℠
  - SIR- and MIR-Compliant IrDA Encoder/Decoder
  - Line Noise Indication Ensures Data Link Integrity
- Deep, 128-Word Buffer and Automated Control Features Help Offload Activity on the Microcontroller
  - Automatic $\overline{RTS}$_ and $\overline{CTS}$_ Flow Control
  - Automatic XON/XOFF Software Flow Control
  - 9-Bit Multidrop-Mode Data Filtering
    - Special Character Detection
    - GPIO-Based Character Detection
    - Two Timers Routed to GPIOs
    - 8 Flexible GPIOs with 20mA Drive Capability
- Saves Board Space
  - TQFN (5mm x 5mm) Package
  - Dual UART in a Single Package
- Fast Data Rates Allow Maximum System Flexibility Across Interface Standards
  - 24Mbps (max) Data Rate
  - High-Resolution Programmable Baud-Rate
  - SPI Up to 26MHz Clock Rate
  - Fast Mode Plus I²C Up to 1MHz
- Integrated Internal Oscillator Eliminates the Need for an External Oscillator and Reduces the BOM Cost
  - Integrated PLL and Divider
- Power Management Control Features Minimize Power Consumption for Portable Applications
  - 1.71V to 3.6V Supply Range
  - Shutdown and Autosleep Modes
    - 1µA Shutdown Current
- Logic-Level Translation on the Controller and Transceiver Interfaces Ensure System Compatibility
- Register Compatible with MAX3107, MAX3108, and MAX148301

19-5806; Rev 5; 8/16

TABLE OF CONTENTS

Absolute Maximum Ratings . . . 7
Package Thermal Characteristics . . . 7
DC Electrical Characteristics . . . 7
AC Electrical Characteristics . . . 10
Timing Diagrams . . . 12
Typical Operating Characteristics . . . 13
Pin Configuration . . . 14
Pin Description . . . 14
Detailed Description . . . 16
- Receive and Transmit FIFOs . . . 16
- Transmitter Operation . . . 17
- Receiver Operation . . . 17
- Line Noise Indication . . . 18
- Clock Selection . . . 19
  - Crystal Oscillator . . . 19
  - External Clock Source . . . 19
- PLL and Predivider . . . 19
- Fractional Baud-Rate Generators . . . 19
- 2x and 4x Rate Modes . . . 20
- Low-Frequency Timer . . . 20
- UART Clock to GPIO . . . 21
- Multidrop Mode . . . 21
- Auto Data Filtering in Multidrop Mode . . . 21
- Auto Transceiver Direction Control . . . 21
- Transmitter Triggering and Synchronization . . . 21
  - Transmitter Synchronization . . . 22
  - Intrachip and Interchip Synchronization . . . 22
  - Delayed Triggering . . . 22
  - Trigger Accuracy . . . 22
  - Synchronization Accuracy . . . 23
  - Auto Transmitter Disable . . . 24
- Echo Suppression . . . 24
- Auto Hardware Flow Control . . . 24
- AutoRTS Control . . . 24
  - AutoCTS Control . . . 25
- Auto Software (XON/XOFF) Flow Control . . . 25
  - Receiver Flow Control . . . 25
  - Transmitter Flow Control . . . 26

TABLE OF CONTENTS (continued)

FIFO Interrupt Triggering . . . 26
Low-Power Standby Modes . . . 26
Forced-Sleep Mode . . . 26
Auto-Sleep Mode . . . 26
Shutdown Mode . . . 27
Power-Up and $\overline{IRQ}$ . . . 27
Interrupt Structure . . . 27
Interrupt Enabling . . . 27
Interrupt Clearing . . . 27
Register Map . . . 28
Detailed Register Descriptions . . . 29
Serial Controller Interface . . . 57
SPI Interface . . . 57
SPI Single-Cycle Access . . . 57
SPI Burst Access . . . 58
Fast Read Cycle . . . 58
I^2C Interface . . . 58
START, STOP, and Repeated START Conditions . . . 58
Slave Address . . . 59
Bit Transfer . . . 59
Single-Byte Write . . . 60
Burst Write . . . 60
Single-Byte Read . . . 61
Burst Read . . . 61
Acknowledge Bits . . . 62
Applications Information . . . 62
Startup and Initialization . . . 62
Low-Power Operation . . . 63
Interrupts and Polling . . . 63
Logic-Level Translation . . . 63
Power-Supply Sequencing . . . 64
Connector Sharing . . . 64
RS-232 5x3 Application . . . 64
Typical Application Circuit . . . 65
Chip Information . . . 65
Package Information . . . 65
Revision History . . . 66

LIST OF FIGURES

Figure 1. I²C Timing Diagram . . . 12
Figure 2. SPI Timing Diagram . . . 12
Figure 3. Transmit FIFO Signals . . . 17
Figure 4. Receive Data Format . . . 17
Figure 5. Receive FIFO . . . 18
Figure 6. Midbit Sampling . . . 18
Figure 7. Clock Selection Diagram. . . . 19
Figure 8. 2x and 4x Baud Rates . . . 20
Figure 9. GPIO_ Clock Pulse Generator . . . 20
Figure 10. Auto Transceiver Direction Control. . . . 22
Figure 11. Setup and Hold Times in Auto Transceiver Direction Control . . . 22
Figure 12. Single Transmitter Trigger Accuracy. . . . 23
Figure 13. Multiple Transmitter Synchronization Accuracy . . . 23
Figure 14. Half-Duplex with Echo Suppression . . . 24
Figure 15. Echo Suppression Timing. . . . 25
Figure 16. Simplified Interrupt Structure . . . 27
Figure 17. PLL Signal Path. . . . 49
Figure 18. SPI Write Cycle. . . . 57
Figure 19. SPI Ready Cycle. . . . 57
Figure 20. SPI Fast Read Cycle. . . . 58
Figure 21. I²C START, STOP, and Repeated START Conditions . . . 59
Figure 22. Write Byte Sequence . . . 60
Figure 23. Burst Write Sequence. . . . 60
Figure 24. Read Byte Sequence . . . 61
Figure 25. Burst Read Sequence. . . . 61
Figure 26. Acknowledge. . . . 62
Figure 27. Startup and Initialization Flowchart. . . . 62
Figure 28. Logic-Level Translation. . . . 63
Figure 29. Connector Sharing with a USB Transceiver. . . . 64
Figure 30. RS-232 Application. . . . 64
Figure 31. RS-485 Half-Duplex Application. . . . 65

LIST OF TABLES

Table 1. StopBits Truth Table . . . 40
Table 2. Lengthx Truth Table . . . 40
Table 3. SwFlow[3:0] Truth Table . . . 45
Table 4. PLLFactorx Selection Guide . . . 49
Table 5. GloblComnd Command Descriptions . . . 53
Table 6. Extended Mode Addressing (SPI Only) . . . 53
Table 7. SPI Command Byte Configuration . . . 57
Table 8. I2C Address Map . . . 59

LIST OF REGISTERS

Receive Hold Register (RHR) . . . 29
Transmit Hold Register (THR) . . . 29
IRQ Enable Register (IRQEn) . . . 30
Interrupt Status Register (ISR) . . . 31
Line Status Interrupt Enable Register (LSRIntEn) . . . 32
Line Status Register (LSR) . . . 33
Special Character Interrupt Enable Register (SpclChrIntEn) . . . 34
Special Character Interrupt Register (SpclCharInt) . . . 35
STS Interrupt Enable Register (STSIntEn) . . . 36
Status Interrupt Register (STSInt) . . . 37
MODE1 Register . . . 38
MODE2 Register . . . 39
Line Control Register (LCR) . . . 40
Receiver Timeout Register (RxTimeOut) . . . 41
HDplxDelay Register . . . 41
IrDA Register . . . 42
Flow Level Register (FlowLvl) . . . 42
FIFO Interrupt Trigger Level Register (FIFOTrgLvl) . . . 43
Transmit FIFO Level Register (TxFIFOLvl) . . . 43
Receive FIFO Level Register (RxFIFOLvl) . . . 43
Flow Control Register (FlowCtrl) . . . 44
XON1 Register . . . 45
XON2 Register . . . 46
XOFF1 Register . . . 46
XOFF2 Register . . . 47
GPIO Configuration Register (GPIOConfg) . . . 47

LIST OF REGISTERS (continued)

GPIO Data Register (GPIOData) 48
PLL Configuration Register (PLLConfig) 49
Baud-Rate Generator Configuration Register (BRGConfig) 50
Baud-Rate Generator LSB Divisor Register (DIVLSB) 50
Baud-Rate Generator MSB Divisor Register (DIVMSB) 51
Clock Source Register (CLKSource) 51
Global IRQ Register (GlobalIRQ) 52
Global Command Register (GloblComnd) 53
Transmitter Synchronization Register (TxSynch) 54
Synchronization Delay Register 1 (SynchDelay1) 55
Synchronization Delay Register 2 (SynchDelay2) 55
Timer Register 1 (TIMER1) 56
Timer Register 2 (TIMER2) 56
Revision Identification Register (RevID) 56

Absolute Maximum Ratings

(Voltages referenced to AGND.)
V_L, V_{CC}, V_{EXT}, XIN.....-0.3V to +4.0V
XOUT.....-0.3V to (V_{CC} + 0.3V)
V_{18}.....-0.3V to the lesser of (V_{CC} + 0.3V) and 2.0V
$\overline{RST}$, $\overline{IRQ}$, MOSI/A1, $\overline{CS}$/A0, SCLK/SCL,
MISO/SDA, LDOEN, SPI/$\overline{I2C}$.....-0.3V to (V_L + 0.3V)
TX_, RX_, $\overline{CTS}$_, GPIO_ .....-0.3V to (V_{EXT} + 0.3V)
DGND.....-0.3V to +0.3V

Continuous Power Dissipation (T_A = +70ºC)
TQFN (derate 34.5mW/ºC above +70ºC).....2758.6mW
Operating Temperature Range.....-40ºC to +85ºC
Maximum Junction Temperature .....+150ºC
Storage Temperature Range.....-65ºC to +150ºC
Lead Temperature (soldering, 10s) .....+300ºC
Soldering Temperature (reflow).....+260ºC

Stresses beyond those listed under "Absolute Maximum Ratings" may cause permanent damage to the device. These are stress ratings only, and functional operation of the device at these or any other conditions beyond those indicated in the operational sections of the specifications is not implied. Exposure to absolute maximum rating conditions for extended periods may affect device reliability.

Package Thermal Characteristics (Note 1)

TQFN
Junction-to-Ambient Thermal Resistance (θ_{JA}) 47ºC/W
Junction-to-Case Thermal Resistance (θ_{JC}).....1.7ºC/W

Note 1: Package thermal resistances were obtained using the method described in JEDEC specification JESD51-7, using a four-layer board. For detailed information on package thermal considerations, refer to **www.maximintegrated.com/thermal-tutorial**.

DC Electrical Characteristics

(V_{CC} = 1.71V to 3.6V, V_L = 1.71V to 3.6V, V_{EXT} = 1.71V to 3.6V, T_A = -40ºC to +85ºC, unless otherwise noted. Typical values are at V_{CC} = 2.8V, V_L = 1.8V, V_{EXT} = 2.5V, T_A = +25ºC.) (Notes 2, 3)

PARAMETER	SYMBOL	CONDITIONS	MIN	TYP	MAX	UNITS
Digital Interface Supply Voltage	V_L		1.71		3.6	V
Analog Supply Voltage	V_{CC}	Internal PLL disabled and bypassed	1.71		3.6	V
		Internal PLL enabled	2.35		3.6	
UART Interface Logic Supply Voltage	V_{EXT}		1.71		3.6	V
Logic Supply Voltage	V_{18}		1.65		1.95	V
CURRENT CONSUMPTION						
V_{CC} Supply Current	I_{CC}	1.8MHz crystal oscillator active, PLL disabled, SPI/I²C interface idle, UART interfaces idle, LDOEN = high			500	µA
		Baud rate = 1Mbps, 20MHz external clock, SPI/I²C interface idle, PLL disabled, all UARTs in loopback mode, LDOEN = low			500	
V_{18} Input Power-Supply Current in Shutdown Mode	I_{18SHDN}	$\overline{RST}$ = low, all inputs and outputs are idle			100	µA
V_{CC} + V_L + V_A Shutdown Supply Current	I_{SHDN}	$\overline{RST}$ = low, MISO, SCLK, MOSI, SPI_I2C, $\overline{CS}$, LDOEN = 0/V_L, CTSB0/1 = 0/V_{EXT}, CTSB0/1 = 0/V_{EXT}		0	1	µA

DC Electrical Characteristics (continued)

(V_{CC} = 1.71V to 3.6V, V_L = 1.71V to 3.6V, V_{EXT} = 1.71V to 3.6V, T_A = -40ºC to +85ºC, unless otherwise noted. Typical values are at V_{CC} = 2.8V, V_L = 1.8V, V_{EXT} = 2.5V, T_A = +25ºC.) (Notes 2, 3)

PARAMETER	SYMBOL	CONDITIONS	MIN	TYP	MAX	UNITS
V_{18} Input Power-Supply Current	I_{18}	Baud rate = 1Mbps, 20MHz external clock, PLL disabled, UART in loopback mode, LDOEN = low (Note 4)			4	mA
SCLK/SCL, MISO/SDA						
MISO/SDA Output Logic-Low Voltage in I²C Mode	V_{OLI2C}	Sink current = 3mA, V_L > 2V			0.4	V
		Sink current = 3mA, V_L < 2V			0.2 x V_L	
MISO/SDA Output Low Voltage in SPI Mode	V_{OLSPI}	Sink current = 2mA			0.4	V
MISO/SDA Output High Voltage in SPI Mode	V_{OHSPI}	Source current = 2mA	V_L - 0.4			V
Input Logic-Low Voltage	V_{IL}	SPI and I²C mode			0.3 x V_L	V
Input Logic-High Voltage	V_{IH}	SPI and I²C mode	0.7 x V_L			V
Input Hysteresis	V_{HYST}	SPI and I²C mode		0.05 x V_L		V
Input Leakage Current	I_{IL}	V_{IN} = 0 to V_L, SPI and I²C mode	-1		+1	µA
Input Capacitance	C_{IN}	SPI and I²C mode		5		pF
SPI/$\overline{I2C}$, $\overline{CS}$/A0, MOSI/A1 INPUTS						
Input Logic-Low Voltage	V_{IL}	SPI and I²C mode			0.3 x V_L	V
Input Logic-High Voltage	V_{IH}	SPI and I²C mode	0.7 x V_L			V
Input Hysteresis	V_{HYST}	SPI and I²C mode		50		mV
Input Leakage Current	I_{IL}	V_{IN} = 0 to V_L, SPI and I²C mode	-1		+1	µA
Input Capacitance	C_{IN}	SPI and I²C mode		5		pF
$\overline{IRQ}$ OUTPUT (OPEN DRAIN)						
Output Logic-Low Voltage	V_{OL}	Sink current = 2mA			0.4	V
Output Leakage Current	I_{OL}	$V_{\overline{IRQ}}$ = 0 to V_L, $\overline{IRQ}$ is not asserted	-1		+1	µA
LDOEN AND $\overline{RST}$ INPUTS						
Input Logic-Low Voltage	V_{IL}				0.3 x V_L	V
Input Logic-High Voltage	V_{IH}		0.7 x V_L			V
Input Hysteresis	V_{HYST}			50		mV
Input Leakage Current	I_{IL}	V_{IN} = 0 to V_L	-1		+1	µA

DC Electrical Characteristics (continued)

(V_{CC} = 1.71V to 3.6V, V_L = 1.71V to 3.6V, V_{EXT} = 1.71V to 3.6V, T_A = -40ºC to +85ºC, unless otherwise noted. Typical values are at V_{CC} = 2.8V, V_L = 1.8V, V_{EXT} = 2.5V, T_A = +25ºC.) (Notes 2, 3)

PARAMETER	SYMBOL	CONDITIONS	MIN	TYP	MAX	UNITS
UART INTERFACE						
$\overline{RTS}$_, TX_ OUTPUTS						
Output Logic-Low Voltage	V_{OL}	Sink current = 2mA			0.4	V
Output Logic-High Voltage	V_{OH}	Source current = 2mA	0.7 x V_{EXT}			V
Input Leakage Current	I_{IL}	Output is three-stated, $V_{\overline{RTS}}$ = 0 to V_{EXT}	-1		+1	µA
Input Capacitance	C_{IN}	High-Z mode		5		pF
$\overline{CTS}$_, RX_ INPUTS						
Input Logic-Low Voltage	V_{IL}				0.3 x V_{EXT}	V
Input Logic-High Voltage	V_{IH}		0.7 x V_{EXT}			V
Input Hysteresis	V_{HYST}			50		mV
$\overline{CTS}$_ Input Leakage Current	I_{IL}	$V_{\overline{CTS}}$ = 0 to V_{EXT}	-1		+1	µA
RX_ Pullup Current	I_{PU}	V_{RX} = 0V, V_{EXT} = 3.6V	-7.5	-5.5	-3.5	µA
Input Capacitance	C_{IN}			5		pF
GPIO_ INPUTS/OUTPUTS						
Output Logic-Low Voltage	V_{OL}	Sink current = 20mA, push-pull or open-drain output type, V_{EXT} > 2.3V			0.45	V
		Sink current = 20mA, push-pull or open-drain output type, V_{EXT} < 2.3V			0.55	
Output Logic-High Voltage	V_{OH}	Source current = 5mA, push-pull output type	V_{EXT} - 0.4			V
Input Logic-Low Voltage	V_{IL}	GPIO_ is configured as an input			0.4	V
Input Logic-High Voltage	V_{IH}	GPIO_ is configured as an input	2/3 x V_{EXT}			V
Pulldown Current	I_{PD}	$V_{GPIO_}$ = V_{EXT} = 3.6V, GPIO_ is configured as an input	3.5	5.5	7.5	µA
XIN						
Input Logic-Low Voltage	V_{IL}				0.6	V
Input Logic-High Voltage	V_{IH}		1.2			V
Input Capacitance	C_{XIN}			16		pF
XOUT						
Input Capacitance	C_{XOUT}			16		pF

AC Electrical Characteristics

(V_{CC} = 1.71V to 3.6V, V_L = 1.71V to 3.6V, V_{EXT} = 1.71V to 3.6V T_A = -40ºC to +85ºC, unless otherwise noted. Typical values are at V_{CC} = 2.8V, V_L = 1.8V, V_{EXT} = 2.5V, T_A = +25ºC.) (Notes 2, 3)

PARAMETER	SYMBOL	CONDITIONS	MIN	TYP	MAX	UNITS
External Crystal Frequency	f_{XOSC}		1		4	MHz
External Clock Frequency	f_{CLK}		0.5		35	MHz
External Clock Duty Cycle		(Note 5)	45		55	%
Baud-Rate Generator Clock Input Frequency	f_{REF}	(Note 5)			96	MHz
I²C BUS: TIMING CHARACTERISTICS (Figure 1)						
SCL Clock Frequency	f_{SCL}	Standard mode			100	kHz
		Fast mode			400	
		Fast mode plus			1000	
Bus Free Time Between a STOP and START Condition	t_{BUF}	Standard mode	4.7			µs
		Fast mode	1.3			
		Fast mode plus	0.5			
Hold Time for START Condition and Repeated START Condition	$t_{HD:STA}$	Standard mode	4.0			µs
		Fast mode	0.6			
		Fast mode plus	0.26			
Low Period of the SCL Clock	t_{LOW}	Standard mode	4.7			µs
		Fast mode	1.3			
		Fast mode plus	0.5			
High Period of the SCL Clock	t_{HIGH}	Standard mode	4.0			µs
		Fast mode	0.6			
		Fast mode plus	0.26			
Data Hold Time	$t_{HD:DAT}$	Standard mode	0		0.9	µs
		Fast mode	0		0.9	
		Fast mode plus	0			
Data Setup Time	$t_{SU:DAT}$	Standard mode	250			ns
		Fast mode	100			
		Fast mode plus	50			
Setup Time for Repeated START Condition	$t_{SU:STA}$	Standard mode	4.7			µs
		Fast mode	0.2			
		Fast mode plus	0.26			
Rise Time of Incoming SDA and SCL Signals	t_R	Standard mode (0.3 x V_L to 0.7 x V_L) (Note 6)	20 + $0.1C_B$		1000	ns
		Fast mode (0.3 x V_L to 0.7 x V_L) (Note 6)	20 + $0.1C_B$		300	
		Fast mode plus			120	
Fall Time of SDA and SCL Signals	t_F	Standard mode (0.3 x V_L to 0.7 x V_L) (Note 6)	20 + $0.1C_B$		1000	ns
		Fast mode (0.3 x V_L to 0.7 x V_L) (Note 6)	20 + $0.1C_B$		300	
		Fast mode plus			120	

AC Electrical Characteristics (continued)

(V_{CC} = 1.71V to 3.6V, V_L = 1.71V to 3.6V, V_{EXT} = 1.71V to 3.6V T_A = -40ºC to +85ºC, unless otherwise noted. Typical values are at V_{CC} = 2.8V, V_L = 1.8V, V_{EXT} = 2.5V, T_A = +25ºC.) (Notes 2, 3)

PARAMETER	SYMBOL	CONDITIONS	MIN	TYP	MAX	UNITS
Setup Time for STOP Condition	$t_{SU:STO}$	Standard mode	4.7			µs
		Fast mode	0.6			
		Fast mode plus	0.26			
Capacitive Load for SDA and SCL	C_B	Standard mode (Note 5)			400	pF
		Fast mode (Note 5)			400	
		Fast mode plus (Note 5)			550	
SCL and SDA I/O Capacitance	$C_{I/O}$	(Note 5)			10	pF
Pulse Width of Spike Suppressed	t_{SP}				50	ns
SPI BUS: TIMING CHARACTERISTICS (Figure 2)						
SCLK Clock Period	$t_{CH}+t_{CL}$		38.4			ns
SCLK Pulse Width High	t_{CH}		16			ns
SCLK Pulse Width Low	t_{CL}		16			ns
$\overline{CS}$ Fall to SCLK Rise Time	t_{CSS}		0			ns
MOSI Hold Time	t_{DH}		3			ns
MOSI Setup Time	t_{DS}		5			ns
Output Data Propagation Delay	t_{DO}				20	ns
MISO Rise and Fall Times	t_{FT}				10	ns
$\overline{CS}$ Hold Time	t_{CSH}		30			ns

Note 2: All units are production tested at T_A = +25ºC. Specifications over temperature are guaranteed by design.
Note 3: Currents entering the IC are negative and currents exiting the IC are positive.
Note 4: When V_{18} is powered by an external voltage supply, it must have current capability above or equal to I_{18}.
Note 5: Guaranteed by design; not production tested.
Note 6: C_B is the total capacitance of either the clock or data line of the synchronous bus in pF.

Timing Diagrams

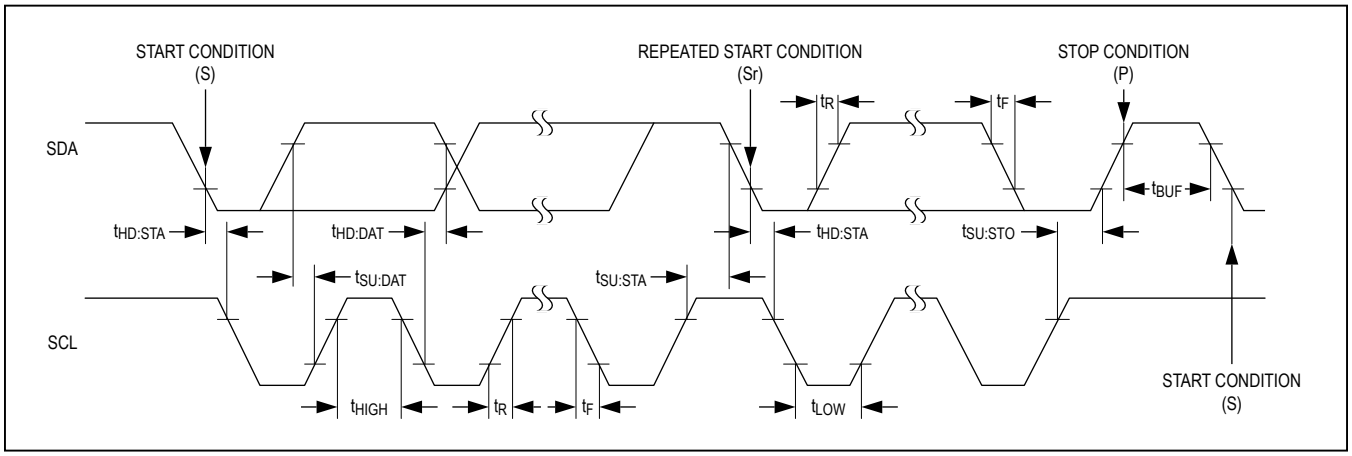

Figure 1. I²C Timing Diagram

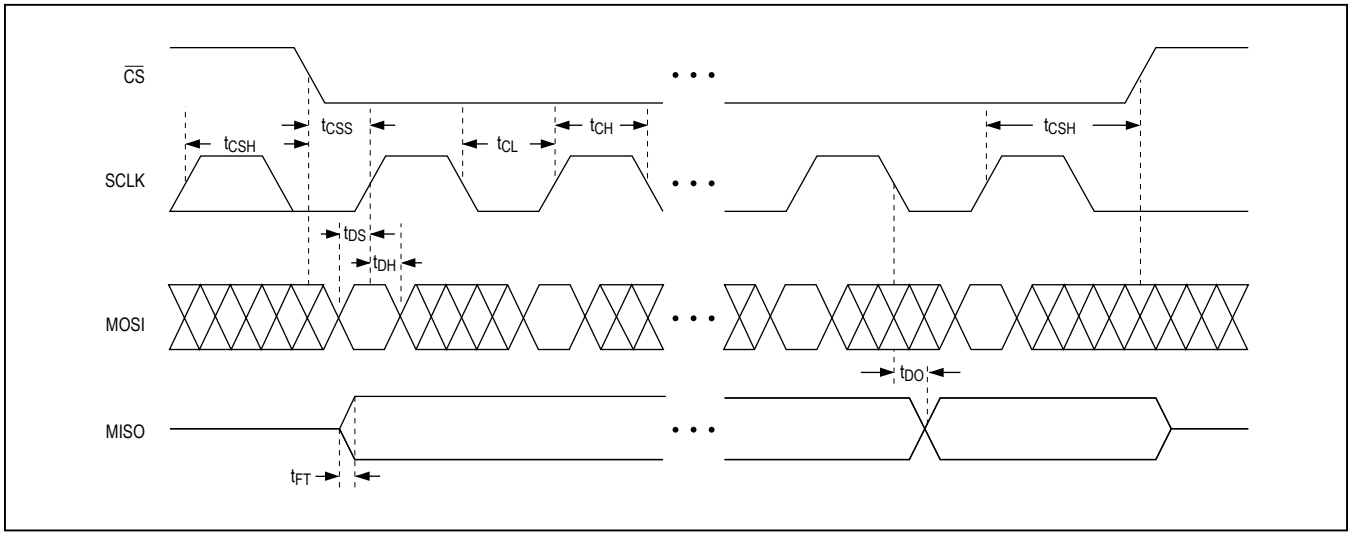

Figure 2. SPI Timing Diagram

Typical Operating Characteristics

(V_{CC} = 2.5V, V_L = 2.5V, V_{EXT} = 2.5V, V_{LDOEN} = V_L, UART1 in sleep mode, T_A = +25°C unless otherwise noted.)

SINK CURRENT (OPEN DRAIN) vs. GPIO_ OUTPUT LOW VOLTAGE

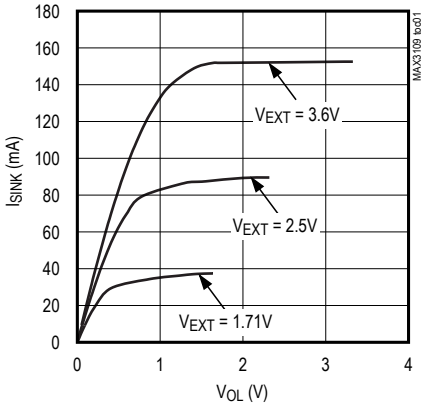

SOURCE CURRENT (PUSH-PULL) vs. GPIO_OUTPUT HIGH VOLTAGE

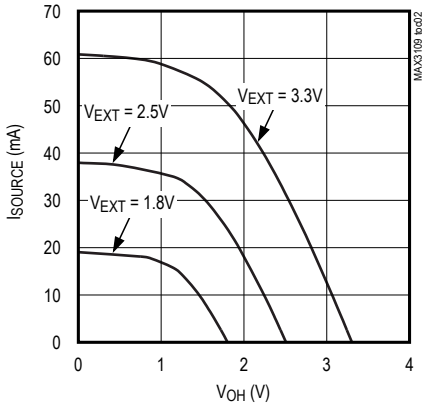

TRANSMITTER SYNCHRONIZATION

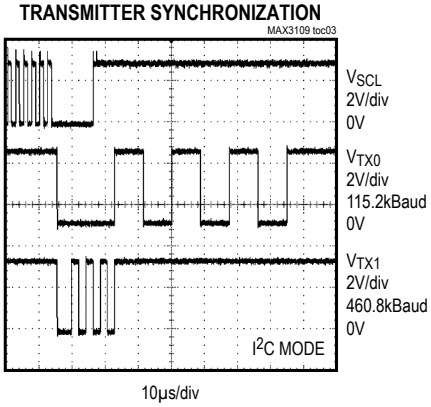

Pin Configuration

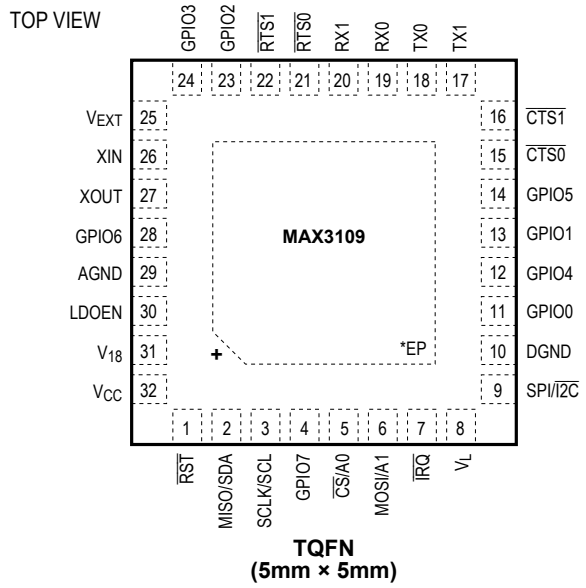

*CONNECT EP TO AGND.

Pin Description

PIN	NAME	FUNCTION
1	$\overline{RST}$	Active-Low Reset Input. Drive $\overline{RST}$ low to force all of the UARTs into hardware reset mode. Driving $\overline{RST}$ low also enables low-power shutdown mode. When $\overline{RST}$ is low, the internal V18 LDO is switched off, even if the LDOEN input is kept high.
2	MISO/SDA	Serial-Data Output. When SPI/$\overline{I2C}$ is high, MISO/SDA functions as the SPI master input-slave output (MISO). When SPI/$\overline{I2C}$ is low, MISO/SDA functions as the SDA, I^2C serial-data input/output. MISO/SDA is high impedance when $\overline{RST}$ is driven low or when the externally supplied V18 is powered off.
3	SCLK/SCL	Serial-Clock Input. When SPI/$\overline{I2C}$ is high, SCLK/SCL functions as the SCLK SPI serial-clock input (up to 26MHz). When SPI/$\overline{I2C}$ is low, SCLK/SCL functions as the SCL, I^2C serial-clock input (up to 1MHz in fast mode plus).
4	GPIO7	General-Purpose Input/Output 7. GPIO7 is user-programmable as an input or output (push-pull or open drain) or an external event-driven interrupt source. GPIO7 has a weak pulldown resistor to DGND when configured as an input.
5	$\overline{CS}$/A0	Active-Low Chip-Select and Address 0 Input. When SPI/I2C is high, $\overline{CS}$/A0 functions as the $\overline{CS}$, SPI active-low chip-select. When SPI/$\overline{I2C}$ is low, $\overline{CS}$/A0 functions as the A0 I^2C device address programming input. Connect CS/A0 to DGND, V_L, SCL, or SDA when SPI/$\overline{I2C}$ is low.
6	MOSI/A1	Serial-Data Input and Address 1 Input. When SPI/$\overline{I2C}$ is high, MOSI/A1 functions as the SPI master output-slave input (MOSI). When SPI/$\overline{I2C}$ is low, MOSI/A1 functions as the A1 I^2C device address programming input. Connect MOSI/A1 to DGND, VL, SCL, or SDA when SPI/$\overline{I2C}$ is low.
7	$\overline{IRQ}$	Active-Low Interrupt Open-Drain Output. $\overline{IRQ}$ is asserted when an interrupt is pending. $\overline{IRQ}$ is high impedance when $\overline{RST}$ is driven low.

Pin Description (continued)

PIN	NAME	FUNCTION
8	V_L	Digital Interface Power Supply. V_L powers the internal logic-level translators for $\overline{RST}$, $\overline{IRQ}$, MOSI/A1, $\overline{CS}$/A0, SCLK/SCL, MISO/SDA, LDOEN, and SPI/$\overline{I2C}$. Bypass V_L with a 0.1µF ceramic capacitor to DGND.
9	SPI/$\overline{I2C}$	SPI Selector Input or Active-Low I^2C. Drive SPI/$\overline{I2C}$ low to enable I^2C. Drive SPI/$\overline{I2C}$ high to enable SPI.
10	DGND	Digital Ground
11	GPIO0	General-Purpose Input/Output 0. GPIO0 is user-programmable as an input or output (push-pull or open drain) or an external event-driven interrupt source. GPIO0 has a weak pulldown resistor to DGND when configured as an input. GPIO0 is the reference clock output when bit 7 of the TxSynch register is set to high (see the *UART Clock to GPIO* section for more information).
12	GPIO4	General-Purpose Input/Output 4. GPIO4 is user-programmable as an input or output (push-pull or open drain) or an external event-driven interrupt source. GPIO4 has a weak pulldown resistor to DGND when configured as an input. GPIO4 is the reference clock output when bit 7 of the TxSynch register is set to high (see the *UART Clock to GPIO* section for more information).
13	GPIO1	General-Purpose Input/Output 1. GPIO1 is user-programmable as an input or output (push-pull or open drain) or an external event-driven interrupt source. GPIO1 has a weak pulldown resistor to DGND when configured as an input. GPIO1 is the TIMER output when bit 7 of the TIMER2 register is set high.
14	GPIO5	General-Purpose Input/Output 5. GPIO5 is user-programmable as an input or output (push-pull or open drain) or an external event-driven interrupt source. GPIO5 has a weak pulldown resistor to DGND when configured as an input. GPIO5 is the TIMER output when bit 7 of the TIMER2 register is set high.
15	$\overline{CTS0}$	Active-Low Clear-to-Send Input for UART0. $\overline{CTS0}$ is a flow-control status input.
16	$\overline{CTS1}$	Active-Low Clear-to-Send Input for UART1. $\overline{CTS1}$ is a flow-control status input.
17	TX1	Serial Transmitting Data Output for UART1. TX1 is logic-high when $\overline{RST}$ is low or when the externally supplied V18 is not powered.
18	TX0	Serial Transmitting Data Output for UART0. TX0 is logic-high when $\overline{RST}$ is low or when the externally supplied V18 is not powered.
19	RX0	Serial Receiving Data Input for UART0. RX0 has an internal weak pullup resistor to V_{EXT}.
20	RX1	Serial Receiving Data Input for UART1. RX1 has an internal weak pullup resistor to V_{EXT}.
21	$\overline{RTS0}$	Active-Low Request-to-Send Output for UART0. $\overline{RTS0}$ can be set high or low by programming the LCR register. $\overline{RTS0}$ is the UART system clock/fractional divider output when bit 7 of the CLKSource register is set high. $\overline{RTS0}$ is logic-high when $\overline{RST}$ is low or when the externally supplied V18 is not powered.
22	$\overline{RTS1}$	Active-Low Request-to-Send Output for UART1. $\overline{RTS1}$ can be set high or low by programming the LCR register. $\overline{RTS1}$ is the UART system clock/fractional divider output when bit 7 of the CLKSource register is set high. $\overline{RTS1}$ is logic-high when $\overline{RST}$ is low or when the externally supplied V18 is not powered.
23	GPIO2	General-Purpose Input/Output 2. GPIO2 is user-programmable as input or output (push-pull or open drain) or an external event-driven interrupt source. GPIO2 has a weak pulldown resistor to DGND when configured as an input.
24	GPIO3	General-Purpose Input/Output 3. GPIO3 is user-programmable as input or output (push-pull or open drain) or an external event-driven interrupt source. GPIO3 has a weak pulldown resistor to DGND when configured as an input.
25	V_{EXT}	Transceiver Interface Power Supply. V_{EXT} powers the internal logic-level translators for RX_, TX_, $\overline{RTS_}$, $\overline{CTS_}$, and GPIO_. Bypass V_{EXT} with a 0.1µF ceramic capacitor to DGND.
26	XIN	Crystal/Clock Input. When using an external crystal, connect one end of the crystal to XIN and the other end to XOUT. When using an external clock source, drive XIN with the single-ended external clock.

Pin Description (continued)

PIN	NAME	FUNCTION
27	XOUT	Crystal Output. When using an external crystal, connect one end of the crystal to XOUT and the other end to XIN. When using an external clock source, leave XOUT unconnected.
28	GPIO6	General-Purpose Input/Output 6. GPIO6 is user-programmable as input or output (push-pull or open drain) or an external event-driven interrupt source. GPIO6 has a weak pulldown resistor to DGND when configured as an input.
29	AGND	Analog Ground
30	LDOEN	LDO Enable Input. Drive LDOEN high to enable the internal 1.8V LDO. Drive LDOEN low to disable the internal LDO. Supply V_{18} with an external voltage source when LDOEN is low.
31	V_{18}	Internal 1.8V LDO Output and 1.8V Power-Supply Input. Bypass V_{18} with a 1µF ceramic capacitor to DGND.
32	V_{CC}	Analog Power Supply. V_{CC} powers the PLL and internal LDO. Bypass V_{CC} with a 0.1µF ceramic capacitor to AGND.
—	EP	Exposed Pad. Connect EP to AGND. Do not use EP as the main AGND connection.

Detailed Description

The MAX3109 dual universal asynchronous receiver-transmitter (UART) bridges an SPI/MICROWIRE® or I²C microprocessor bus to an asynchronous serial-data communication link, such as RS-485, RS-232, or IrDA. The MAX3109 is configured through 8-bit registers, which are accessed through the SPI or I²C interface. These registers are organized by related function as shown in the *Register Map* section.

The host controller loads data into the Transmit Hold register (**THR**) through the SPI or I²C interface. This data is automatically pushed into the transmit FIFOs, formatted, and sent out at TX_. The MAX3109 adds START, STOP, and parity bits to the data before transmitting the data out at the selected baud rate. The clock configuration registers determine the baud rates, clock source selection, clock frequency prescaling, and fractional baud-rate generator settings for each UART.

The MAX3109 receivers detect a START bit as a high-to-low transition on RX_. An internal clock samples this data at 16 times the baud rate. The received data is automatically placed in the receive FIFOs and can then be read out by the host controller through the Receiver Hold register (**RHR**).

The device features two identical UARTs that are completely independent except for the input clock. Text in this data sheet references individual UART operation, unless otherwise noted.

The MAX3109's register set is compatible with the MAX3107. Refer to Application Note 4938: *Differences Between Maxim's Advanced UART Devices* for information on how to transfer firmware from the MAX3107 to the MAX3109.

MICROWIRE is a registered trademark of National Semiconductor Corp.

Receive and Transmit FIFOs

Each UART's receiver and transmitter has a 128-word-deep FIFOs, reducing the number of intervals that the host processor needs to dedicate for high-speed, high-volume data transfer to and from the device. As the data rates of the asynchronous RX_/TX_ interfaces increase and get closer to those of the host controller's SPI/I2C data rates, UART management and flow-control can make up a significant portion of the host's activity. By increasing FIFO size, the host is interrupted less often and can use data block transfers to and from the FIFOs.

FIFO trigger levels can generate interrupts to the host controller, signaling that programmed FIFO fill levels have been reached. The transmitter and receiver trigger levels are programmed through the **FIFOTrgLvl** register with a resolution of eight FIFO locations. The receive FIFO trigger signals to the host either that the receive FIFO has a defined number of words waiting to be read out in a block or that a known number of vacant FIFO locations are available and ready to be filled. The transmit FIFO trigger generates an interrupt when the transmit FIFO fill level is above the programmed trigger level. The host then knows to throttle data writing to the transmit FIFO through **THR**.

The host can read out the number of words present in each of the FIFOs through the **TxFIFOLvl** and **RxFIFOLvl** registers. **Note:** The **TxFIFOLvl** and **RxFIFOLvl** values can be in error. See the **TxFIFOLvl** register description for details.

The contents of the TxFIFO and RxFIFO are both cleared when the **MODE2**[1]: FIFORst bit is set high.

Transmitter Operation

Figure 3 shows the structure of the transmitter with the TxFIFO. The transmit FIFO can hold up to 128 words of data that are added by writing to the **THR** register.

The transmit FIFO fill level can be programmed to generate an interrupt when greater than or equal to a programmed number of words are present in the TxFIFO through the **FIFOTrgLvl** register. This TxFIFO interrupt trigger level is selectable by the **FIFOTrgLvl**[3:0] bits. When the transmit FIFO fill level increases to at least the programmed trigger level, an interrupt is generated in **ISR**[4]: TxTrigInt.

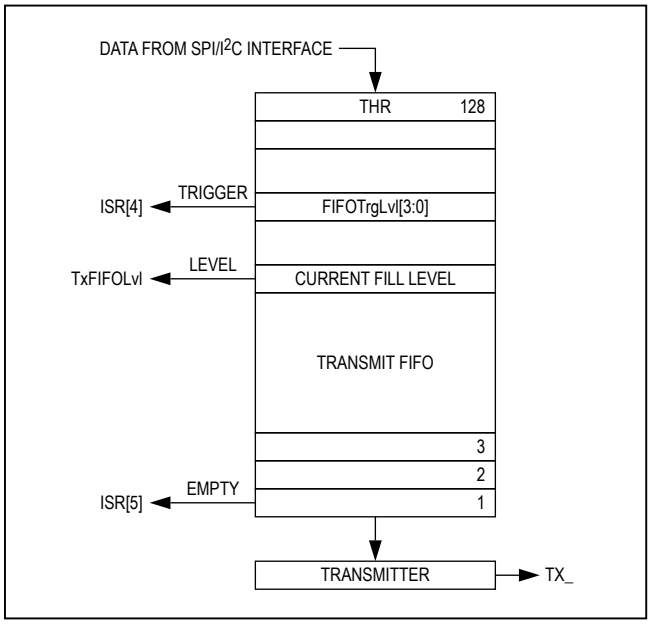

Figure 3. Transmit FIFO Signals

An interrupt is generated in **ISR**[5]: TFifoEmptyInt when the transmit FIFO is empty. **ISR**[5] goes high when the transmitter starts transmitting the last word in the TxFIFO. An additional interrupt is generated in **STSInt**[7]: TxEmptyInt when the transmitter completes transmitting the last word.

To halt transmission, set the **MODE1**[1]: TxDisabl bit high. After TxDisabl is set, the transmitter completes the transmission of the current character and then ceases transmission. Turn the transmitter off prior to enabling auto software flow control and AutoRTS flow control.

The TX_ output logic can be inverted through the **IrDA**[5]: TxInv bit. Unless otherwise noted, all transmitter logic described in this data sheet assumes that TxInv is set low. **Note:** Errors in transmitted data can occur when the **THR** is being written to while the transmitter is sending data. See the **THR** register description for details.

Receiver Operation

The receiver expects the format of the data at RX_ to be as shown in Figure 4. The quiescent logic state is logic-high and the first bit (the START bit) is logic-low (RxInv = 0). The 8-bit data word expected to be received LSB first. The receiver samples the data near the midbit instant (Figure 4). The received words and their associated errors are deposited into the receive FIFO. Errors and status information are stored for every received word (Figure 5). The host reads the data out of the receive FIFO by reading **RHR**, which comes out oldest data first. After a word is read out of **RHR**, **LSR** contains the status information for that word. **Note:** Errors in transmitted data can occur when the **THR** is being written to while the transmitter is sending data. See the **THR** register description for details.

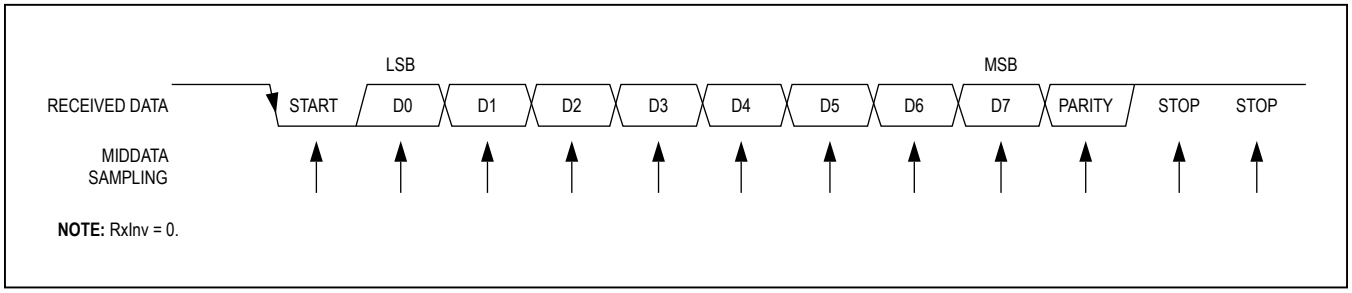

Figure 4. Receive Data Format

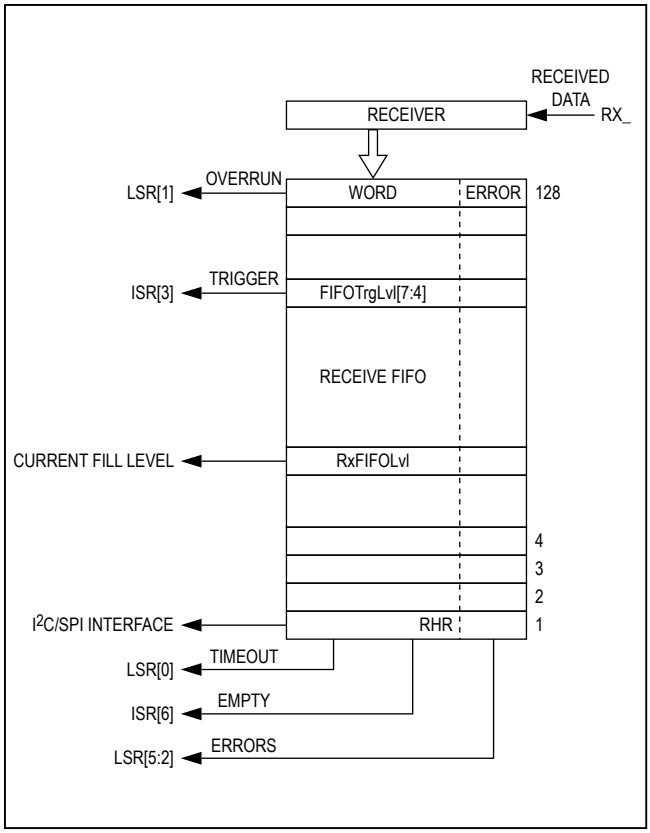

Figure 5. Receive FIFO

The following three error conditions are checked for each received word: parity error, frame error, and noise on the line. Parity errors are detected by calculating either even or odd parity of the received word as programmed by register settings. Framing errors are detected when the received data frame does not match the expected frame format in length. Line noise is detected by checking the logical congruency of the three samples taken of each bit (Figure 6).

The receiver can be turned off by setting the **MODE1**[0]: RxDisabl bit high. After this bit is set high, the MAX3109 turns the receiver off immediately following the current word and does not receive any further data.

The RX_ input logic can be inverted by setting the **IrDA**[4]: RxInv bit high. Unless otherwise noted, all receiver logic described in this data sheet assumes that RxInv is set low.

Line Noise Indication

When operating in standard or 2x (i.e., not 4x) rate mode, the MAX3109 checks that the binary logic level of the three samples per received bit are identical. If any of the three samples per received bit have differing logic levels, then noise on the transmission line has affected the received data and it is considered to be noisy. This noise indication is reflected in the **LSR**[5]: RxNoise bit for each received byte. Parity errors are another indication of noise, but are not as sensitive.

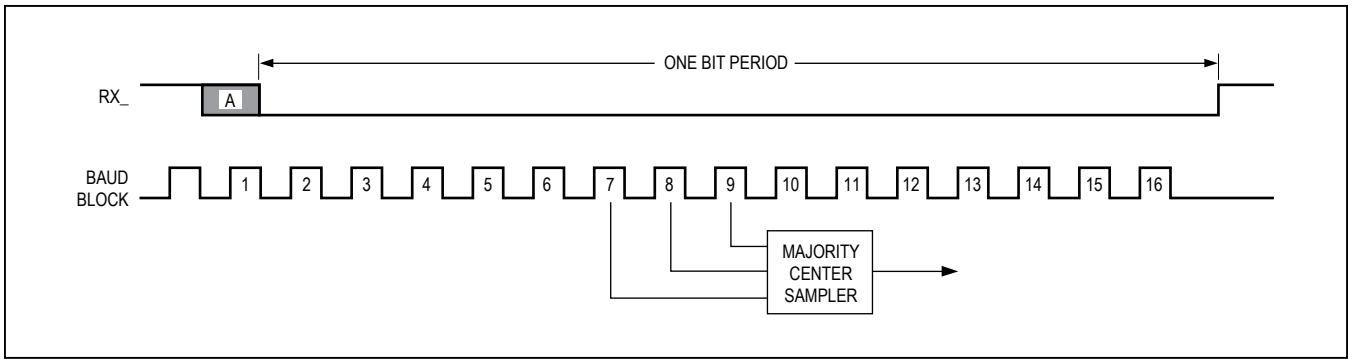

Figure 6. Midbit Sampling

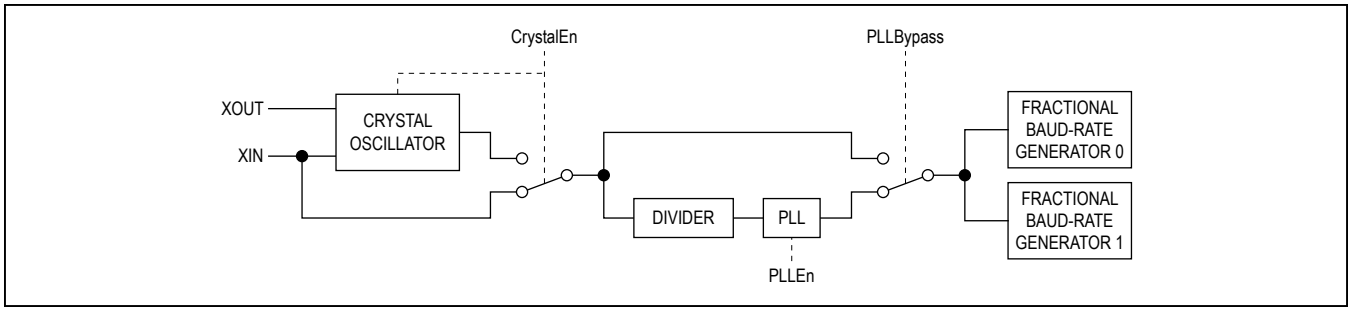

Figure 7. Clock Selection Diagram

Clock Selection

The MAX3109 can be clocked by either an external crystal or an external clock source. Figure 7 shows a simplified diagram of the clock selection circuitry. When the MAX3109 is clocked by a crystal, the **STSInt**[5]: ClkReady bit indicates when the crystal oscillator has reached steady state and the baud-rate generator is ready for stable operation.

Each UART baud rate can be individually programmed and both share the same reference clock input.

The baud-rate clock can be routed to the $\overline{RTS_}$ output by setting the **CLKSource**[7]: CLKtoRTS bit high. The clock rate is 16x the baud rate in standard operating mode, 8x the baud rate in 2x rate mode, and 4x the baud rate in 4x rate mode. If the fractional portion of the baud-rate generator is used, the clock is not regular and exhibits jitter.

Crystal Oscillator

The MAX3109 is equipped with a crystal oscillator to provide high baud-rate accuracy and low power consumption. Set the **CLKSource**[1]: CrystalEn bit high to enable and select the crystal oscillator. The on-chip crystal oscillator has integrated load capacitances of 16pF in both the XIN and XOUT pins. Connect only an external crystal or ceramic oscillator between XIN and XOUT.

External Clock Source

Connect an external single-ended clock source to XIN when not using the crystal oscillator. Leave XOUT unconnected. Set the **CLKSource**[1]: CrystalEn bit low to select external clocking.

PLL and Predivider

The internal predivider and PLL allow for compatibility with a wide range of external clock frequencies and baud rates. The PLL can be configured to multiply the input clock rate by a factor of 6, 48, 96, or 144 by the **PLLConfig**[7:6] bits. The predivider is located between the input clock and the PLL and allows division of the input clock by an integer factor between 1 and 63. This value is defined by the **PLLConfig**[5:0] bits. See the **PLLConfig** register description for more information. Use of the PLL requires V_{CC} to be higher than 2.35V.

Fractional Baud-Rate Generators

Each UART has an internal fractional baud-rate generator that provides a high degree of flexibility and high resolution in baud-rate programming. The baud-rate generator has a 16-bit integer divisor and a 4-bit word for the fractional divisor. The fractional baud-rate generator can be used either with the crystal oscillator or external clock source.

The integer and fractional divisors are calculated by the divisor, D:

$$D = \frac{f_{REF} \times RateMode}{16 \times BaudRate}$$

where f_{REF} is the reference frequency input to the baud-rate generator, RateMode is the rate mode multiplier (1x default), BaudRate is the desired baud rate, and D is the ideal divisor. f_{REF} must be less than 96MHz. RateMode is 1 in 1x rate mode, 2 in 2x rate mode, and 4 in 4x rate mode.

The integer divisor portion, DIV, of the divisor, D, is obtained by truncating D:

$$DIV = TRUNC(D)$$

DIV can be a maximum of 16 bits (65,535) wide and is programmed into the two single-byte-wide registers **DIVMSB** and **DIVLSB**. The minimum allowed value for **DIVLSB** is 1.

The fractional portion of the divisor, FRACT, is a 4-bit nibble that is programmed into **BRGConfig**[3:0]. The maximum value is 15, allowing the divisor to be programmed with a resolution of 0.0625. FRACT is calculated as: FRACT = ROUND(16 x (D - DIV)).

The following is an example of how to calculate the divisor. It is based on a required baud rate of 190kbaud and a reference input frequency of 28.23MHz and 1x (default) rate mode.

The ideal divisor is calculated as:

D = 28,230,000/(16 x 190,000) = 9.286

hence DIV = 9.

FRACT = ROUND(16 x 0.286) = 5

so **DIVMSB** = 0x00, **DIVLSB** = 0x09, and **BRGConfig**[3:0] = 0x05.

The resulting actual baud rate can be calculated as:

$$BR_{ACTUAL} = \frac{f_{REF} \times RateMode}{16 \times D_{ACTUAL}}$$

For this example:

D_{ACTUAL} = 9 + 5/16 = 9.3125, RateMode = 1, and BR_{ACTUAL} = 28,230,000/(16 x 9.3125) = 189463 baud. Thus, the actual baud rate is within 0.28% of the ideal rate.

2x and 4x Rate Modes

To support higher baud rates than possible with standard operation using 16x sampling, the MAX3109 offers 2x and 4x rate modes. In these modes, the reference clock rate only needs to be either 8x or 4x higher than the baud rate, respectively. In 4x rate mode, each received bit is only sampled once at the midbit instant instead of the usual three samples to determine the logic value of the received bit. This reduces the ability to detect line noise on the received data in 4x rate mode. The 2x and 4x rate modes are selectable through **BRGConfig**[5:4]. Note that IrDA encoding and decoding does not operate in 2x and 4x rate modes.

When 2x rate mode is selected, the actual baud rate is twice the rate programmed into the baud-rate generator. If 4x rate mode is enabled, the actual baud rate on the line is quadruple that of the programmed baud rate (Figure 8).

Low-Frequency Timer

Each UART has a general-purpose timer that can be used to generate a low-frequency clock at a GPIO output and can, for example, be used to drive external LEDs. The low-frequency clock is a divided replica of the given UART baud-rate clock. The timer for each UART is internally routed to the respective GPIO_ output when enabled by the **TIMER2** register as follows:

- UART0: GPIO1
- UART1: GPIO5

The clock pulses at the GPIOs are generated at a rate defined by the baud-rate generator and the timer divider (Figure 9). The baud-rate generator clock frequency is divided by (1024 x Timer[14:0]) to produce the GPIO_ clock, where Timer[14:0] is the 15-bit value programmed into the **TIMER1** and **TIMER2** registers. The timer output is 50% duty cycle clock.

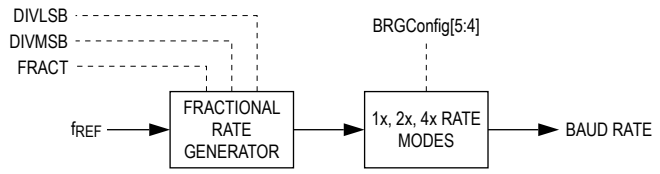

NOTE: IrDA DOES NOT WORK IN 2x AND 4x MODES.

Figure 8. 2x and 4x Baud Rates

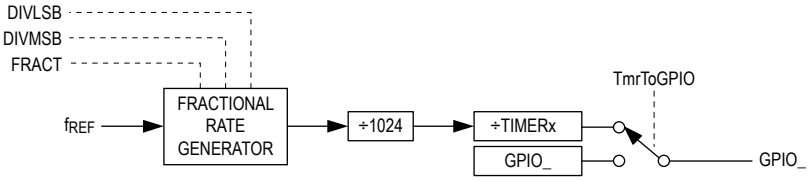

Figure 9. GPIO_ Clock Pulse Generator

UART Clock to GPIO

The MAX3109 reference clock can be routed to the GPIO0 and/or GPIO4 outputs if a synchronous high-frequency clock is needed by another device. Enable routing a UART clock to GPIO0 and/or GPIO4 in the **TxSynch** register. This output clock could, for example, be used to clock another UART device.

Multidrop Mode

In multidrop mode, also known as 9-bit mode, the data word length is 8 bits and a 9th bit is used for distinguishing between an address word and a data word. Multidrop mode is enabled by the **MODE2**[6]: MultiDrop bit. The MultiDrop bit takes the place of the parity bit in the data word structure. Parity checking is disabled and an interrupt is generated in **SpclCharInt**[5]: MultiDropInt when an address (9th bit is 1) is received while in multidrop mode.

It is up to the host processor to filter out the data intended for its address. Alternatively, the auto data-filtering feature can be used to automatically filter out the data not intended for the station's specific 9-bit mode address.

Auto Data Filtering in Multidrop Mode

In multidrop mode, the MAX3109 can be configured to automatically filter out data that is not meant for its address. The address is user-definable either by programming a register value or a combination of a register value and GPIO hardware inputs. Use either the entire **XOFF2** register or the **XOFF2**[7:4] bits in combination with GPIO_ inputs to define the address.

Enable multidrop mode by setting the **MODE2**[6]: MultiDrop bit high and enable auto data filtering by setting the **MODE2**[4]: SpecialChr bit high.

When using register bits in combination with GPIO_ inputs to define the address, the MSB of the address is written to the **XOFF2**[7:4] bits, while the LSBs of the address are defined by the GPIOs. To enable this address-definition method along with auto data filtering, set the **FlowCtrl**[2]: GPIAddr bit high in addition to the **MODE2**[4]: SpecialChr and **MODE2**[6]: MultiDrop bits. The GPIO_ inputs are automatically read when the **FlowCtrl**[2]: GPIAddr bit is set high, and the address is automatically updated on logic changes to any GPIO pin.

When using auto data filtering, the MAX3109 checks each received address against the programmed station address. When an address is received that matches the station's address, received data is stored in the RxFIFO. When an address is received that does not match the station's address, received data is discarded. Addresses are not stored into the FIFO but an interrupt is still generated in **SpclCharInt**[5]: MultiDropInt upon receiving an address. An additional interrupt is generated in **SpclCharInt**[3]: XOFF2Int when the station address is received.

Auto Transceiver Direction Control

In some half-duplex communication systems, the transceiver's transmitter must be turned off when data is being received in order to not load the bus. This is the case in half-duplex RS-485 communication. Similarly, in full-duplex multidrop communication such as RS-485 or RS-422 V.11, only one transmitter can be enabled at any one time while the others must be disabled. The MAX3109 can automatically enable/disable a transceiver's transmitter and/or receiver at the hardware level by controlling its DE and $\overline{RE}$ pins. This feature relieves the host processor of this time-critical task.

The $\overline{RTS_}$ output is used to control the transceivers' transmit-enable input and is automatically set high when the MAX3109's transmitter starts transmission. This occurs as soon as data is present in the transmit FIFO. Auto transceiver direction control is enabled by the **MODE1**[4]: TrnscvCtrl bit. Figure 10 shows a typical MAX3109 connection in an RS-485 application using the auto transceiver direction control feature.

The RTS output can be set high in advance of TX_ transmission by a programmable time period called the setup time (Figure 11). The setup time is programmed by the **HDplxDelay**[7:4]: Setupx bits. Similarly, the $\overline{RTS_}$ output can be held high for a programmable period after the transmitter has completed transmission called the hold time. The hold time is programmed by the **HDplxDelay**[3:0] bits.

Transmitter Triggering and Synchronization

The MAX3109 allows synchronization of transmitters so that selected UARTs start transmitting data when a trigger command is received. Optional delays can also be programmed that delay the start of transmission after a trigger command is received. A UART's transmitter can be assigned one of 16 possible SPI/I^2C trigger commands. A trigger command is defined as any of the 16 special values written into the **GlobIComnd** register (see the **GlobIComnd** register description for more information). When a byte is written into the **GlobIComnd** register, the UART select bit (U) is ignored by the MAX3109 and the **GlobIComnd** applies to both UARTs. Transmission is initiated when the MAX3109 receives an assigned SPI/I^2C trigger command, the selected transmitter is initially disabled, and data has been loaded into its TxFIFO.

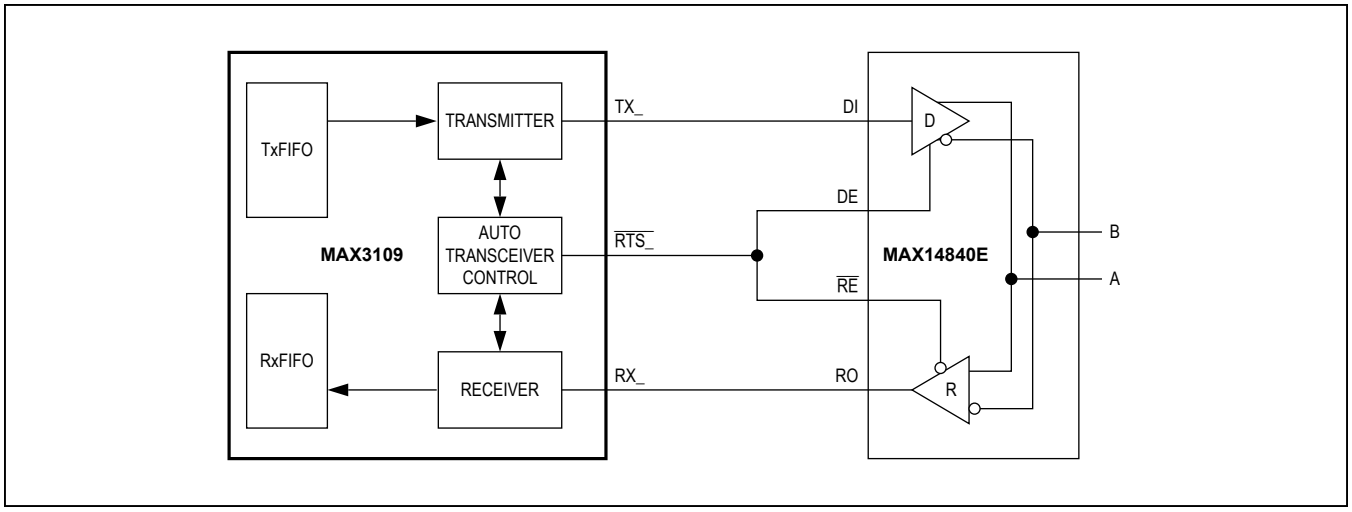

Figure 10. Auto Transceiver Direction Control

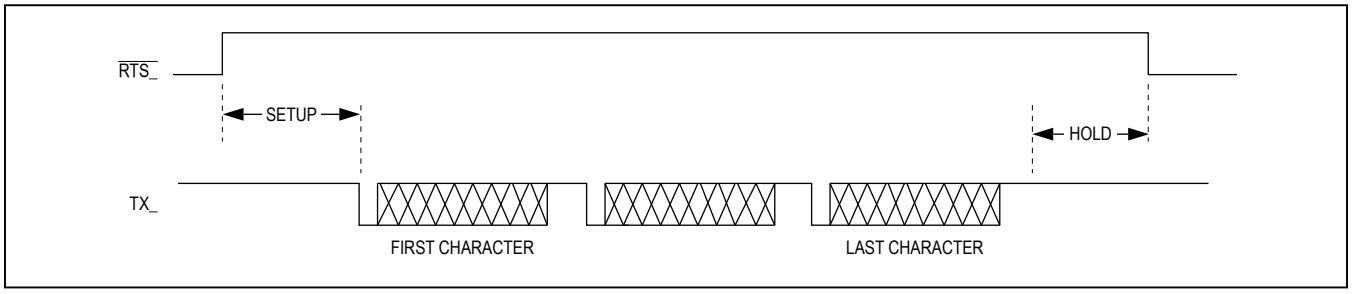

Figure 11. Setup and Hold Times in Auto Transceiver Direction Control

Enable and configure transmitter synchronization with the **TxSynch** register. Triggering and synchronization requires that the transmitters are disabled before the trigger is received. This can be done by setting the **MODE1**[1]: TxDisabl bit high or by using the auto transmitter disable function (**TxSynch**[4] is logic 1).

Transmitter Synchronization

Synchronize multiple UARTs so that their transmitters start transmission simultaneously by assigning a common trigger command to the UARTs that should be synchronized.

Intrachip and Interchip Synchronization

Intrachip transmitter triggering occurs when the two UARTs in a MAX3109 device are triggered by one command. This type of synchronization is supported in both SPI and I^{2}C modes, as the trigger commands are global commands that are received by both UARTs simultaneously.

Interchip transmitter triggering synchronizes UARTs in different MAX3109 devices. This type of synchronization is achievable in SPI mode only. Pull the $\overline{CS}$ input of all the MAX3109 devices on the bus low during the SPI master's write trigger command so that the commands are received by all UARTs on the shared SPI bus.

I^{2}C protocol does not allow simultaneous addressing of multiple devices.

Delayed Triggering

A delay can be programmed to postpone the start of transmission after receiving an assigned trigger command. Set the delay by programming the **SynchDelay1** and **SynchDelay2** registers.

Trigger Accuracy

The delay between the time when the MAX3109 receives a trigger command and the time when the associated transmitter starts transmission is made up of a fixed, deterministic portion, and a variable, random component.

Both portions of the delay are dependent on the UART's clock. When the fractional divider is not used, the intrinsic trigger delay, t_{TRIG}, is bounded by the following limits:

$$\frac{5}{UARTCLK} \leq t_{TRIG} \leq \frac{6}{UARTCLK}$$

where UARTCLK is the baud-rate divider output. The reference point is the time when the trigger command is received by the MAX3109. This occurs on the final (i.e., the 16th) SPI clock's low-to-high transition (Figure 12).

In I2C mode, this occurs on the final (i.e., the 8th) SCL low-to-high transition.

When the fractional baud-rate generator is used, the random portion is larger than one UART clock period.

Synchronization Accuracy

When synchronizing multiple UART transmitters, the output skew of the TX_ transmitter outputs is based on the triggering delays of each UART (Figure 13). This skew has a baud rate dependent component, similar to the

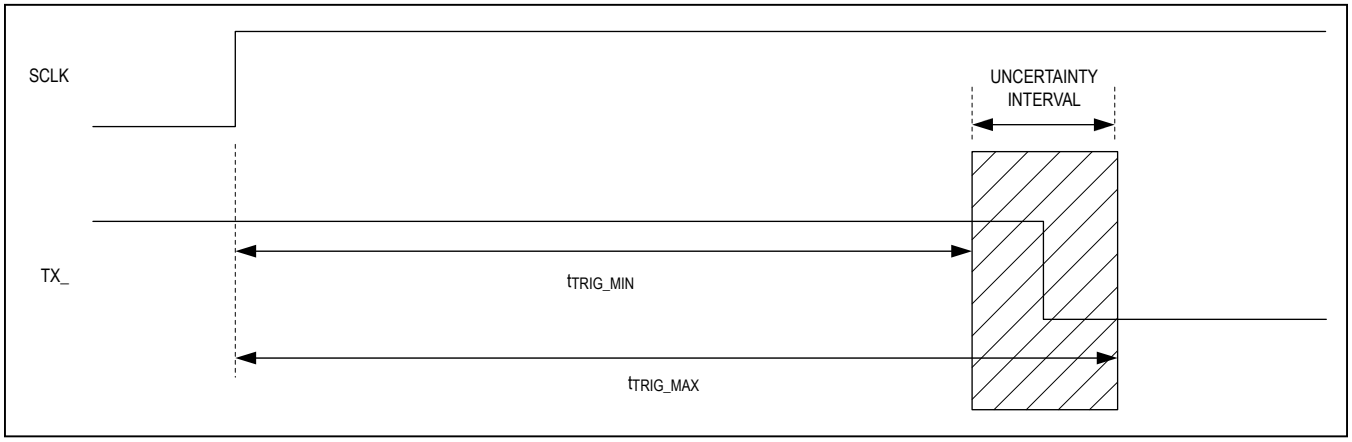

Figure 12. Single Transmitter Trigger Accuracy

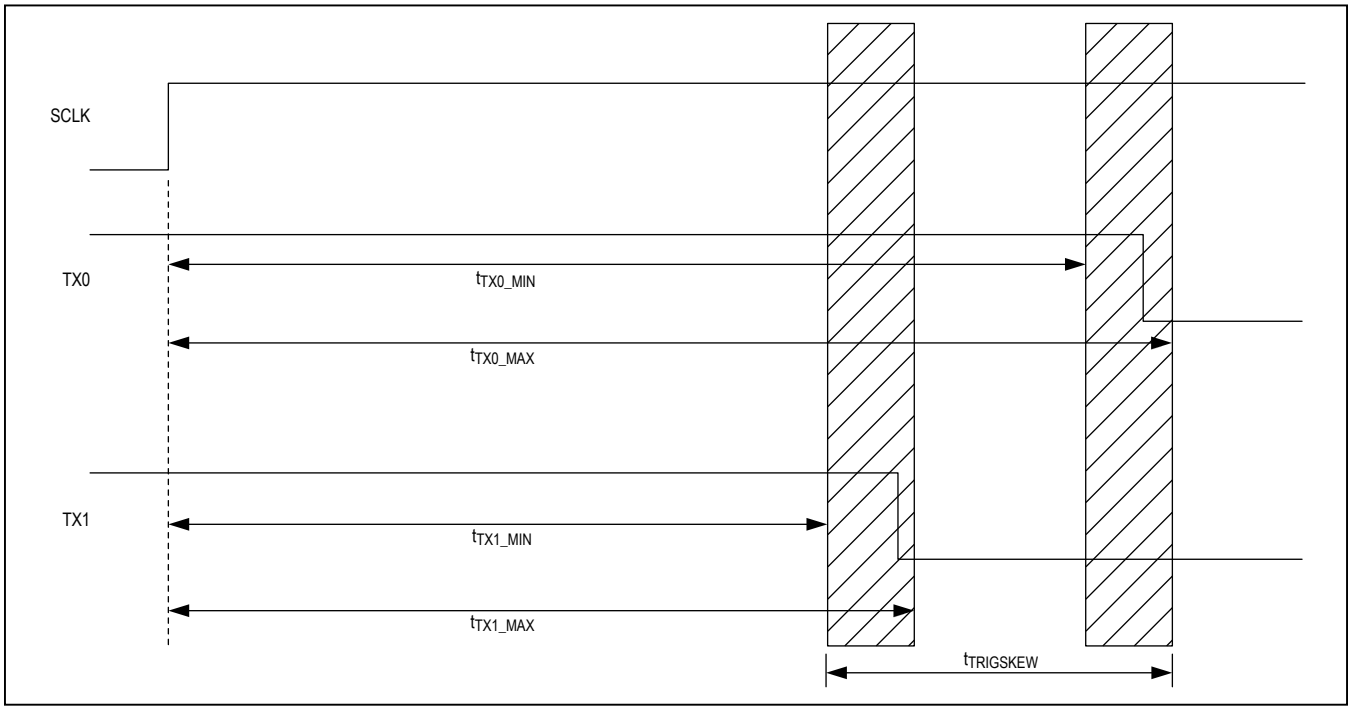

Figure 13. Multiple Transmitter Synchronization Accuracy

trigger accuracy equation for a single transmitter output. Calculate the TX_ transmitter output skew using the following equation:

$$t_{TRIGSKEW} \leq \frac{6}{(UARTCLK)_S} - \frac{5}{(UARTCLK)_F}$$

where $(UARTCLK)_S$ is the fractional divider output clock of the lower/slower baud rate UART, and $(UARTCLK)_F$ is the fractional divider output clock of the higher/faster baud rate UART.

Auto Transmitter Disable

The MAX3109 allows automatic disabling of the transmitter. Enable auto transmitter disabling functionality by setting the **TxSynch**[6]: TxAutoDis bit high. In this mode, the MAX3109 disables the specified transmitter by setting the **MODE1**[1]: TxDisabl bit high after it completes sending all the data in its TxFIFO. New data can then be loaded into the TxFIFO. A disabled transmitter does not send out data on the TX_ output when data is present in its TxFIFO.

To enable transmission after a transmitter has been disabled automatically, either clear the TxAutoDis or toggle the TxDisabl bit.

Echo Suppression

The MAX3109 can suppress echoed data that is sometimes found in half-duplex communication networks, such as RS-485 and IrDA. If the transceiver's receiver is not turned off while the transceiver is transmitting, copies (echoes) of the transmitted data are received by the UART. The MAX3109's receiver can block the reception of this echoed data by enabling echo suppression. Figure 14 shows a typical RS-485 application using the echo suppression feature. Set the **MODE2**[7]: EchoSuprs bit high to enable echo suppression.

The MAX3109 can also block echoes with a long round trip delay by disabling the transceiver's receiver with the $\overline{RTS_}$ output while the MAX3109 is transmitting. The transmitter can be configured to remain enabled after the end of the transmission for a programmable period of time called the hold time delay (Figure 15). The hold time delay is set by the **HDplxDelay**[3:0]: Holdx bits. See the **HDplxDelay** description in the *Detailed Register Descriptions* section for more information.

Echo suppression can operate simultaneously with auto transceiver direction control.

Auto Hardware Flow Control

The MAX3109 is capable of auto hardware ($\overline{RTS_}$ and $\overline{CTS_}$) flow control without the need for host processor intervention. When AutoRTS control is enabled, the MAX3109 automatically controls the $\overline{RTS_}$ handshake without the need for host processor intervention. AutoCTS flow control separately turns the MAX3109's transmitter on and off based on the $\overline{CTS_}$ input. AutoRTS and AutoCTS flow control modes are independently enabled by the **FlowCtrl**[1:0] bits.

AutoRTS Control

AutoRTS flow control ensures that the receive FIFO does not overflow by signaling to the far-end UART to stop data transmission. The MAX3109 does this automatically by controlling the $\overline{RTS_}$ output. AutoRTS flow control is enabled by setting the **FlowCtrl**[0]: AutoRTS bit high. The HALT and RESUME programmable values determine the threshold RxFIFO fill levels at which $\overline{RTS_}$ is asserted and deasserted. Set the HALT and RESUME levels in

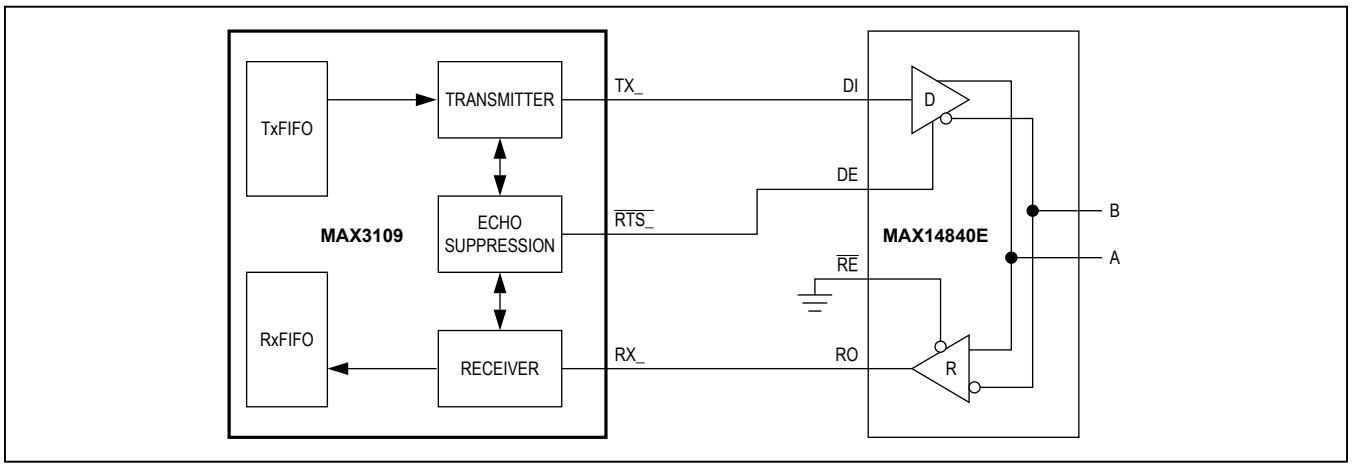

Figure 14. Half-Duplex with Echo Suppression

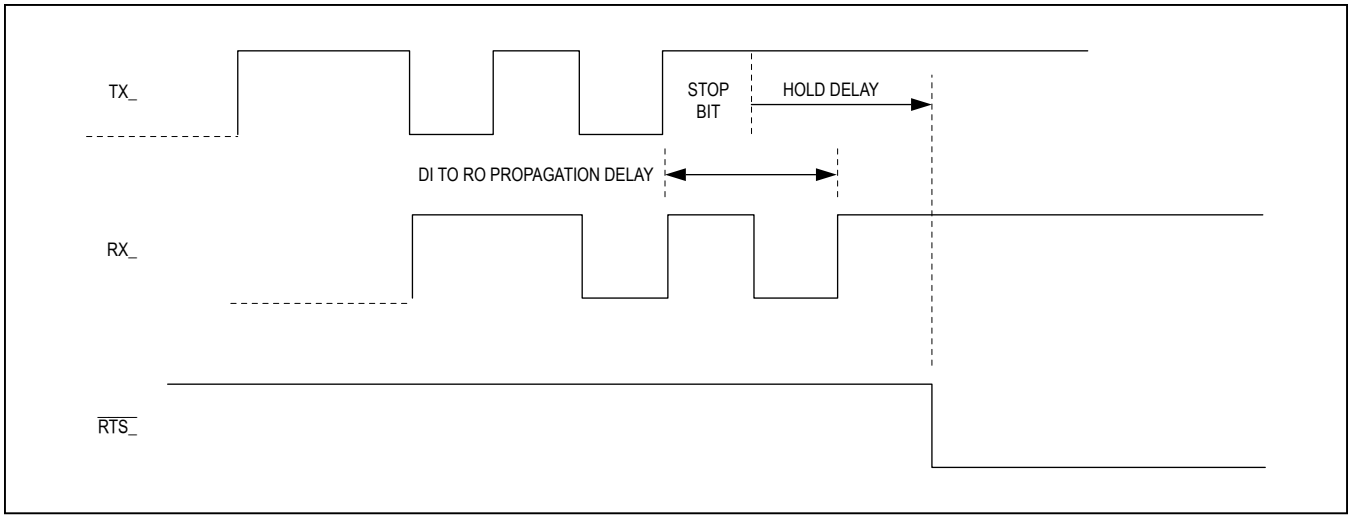

Figure 15. Echo Suppression Timing

the **FlowLvl** register. With differing HALT and RESUME levels, hysteresis of the RxFIFO level can be defined for RTS_ transitions.

When the RxFIFO is filled to a level higher than the HALT level, the MAX3109 deasserts RTS_ and stops the far-end UART from transmitting any additional data. RTS_ remains deasserted until the RxFIFO is emptied enough so that the number of words falls to below the RESUME level.

Interrupts are not generated when the HALT and RESUME levels are reached. This allows the host controller to be completely disengaged from RTS_ flow control management.

AutoCTS Control

When AutoCTS flow control is enabled, the UART automatically starts transmitting data when the CTS_ input is logic-low and stops transmitting data when CTS_ is logic-high. This frees the host processor from managing this time-critical flow-control task. AutoCTS flow control is enabled by setting the **FlowCtrl**[1]: AutoCTS bit high. The **ISR**[7]: CTSInt interrupt works normally during AutoCTS flow control. Set the **IRQEn**[7]: CTSIntEn bit low to disable routing of CTS_ interrupts to IRQ and ensure that the host does not receive interrupts from CTS_ transitions. If CTS_ transitions from low to high during transmission of a data word, the MAX3109 completes the transmission of the current word and halts transmission afterwards.

Turn the transmitter off by setting the **MODE1**[1]: TxDisabl bit high before enabling AutoCTS control.

Auto Software (XON/XOFF) Flow Control

When auto software flow control is enabled, the MAX3109 recognizes and/or sends predefined XON/XOFF characters to control the flow of data across the asynchronous serial link. The XON character signifies that there is enough room in the receive FIFO and transmission of data should continue. The XOFF character signifies that the receive FIFO is nearing overflow and that the transmission of data should stop. Auto software flow control works autonomously and does not require host intervention, similar to auto hardware flow control. To reduce the chance of receiving corrupted data that equals a single-byte XON or XOFF character, the MAX3109 allows for double-wide (16-bit) XON/XOFF characters. The XON and XOFF characters are programmed into the **XON1**, **XON2** and **XOFF1**, **XOFF2** registers.

The **FlowCtrl**[7:3] bits are used for enabling and configuring auto software flow control. An interrupt is generated in **ISR**[1]: SpCharInt whenever an XON or XOFF character is received and details are stored in the **SpclCharInt** register. Set the **IRQEn**[1]: SpclChrIEn bit low to disable routing of the interrupt to IRQ.

Software flow control consists of transmit flow control and receive flow control, which operate independently of each other.

Receiver Flow Control

When auto receive flow control is enabled by the **FlowCtrl**[7:6] bits, the MAX3109 automatically controls the transmission of data by the far-end UART by sending XOFF and XON control characters. The HALT and

RESUME levels determine the threshold RxFIFO fill levels at which the XOFF and XON characters are sent. HALT and RESUME are programmed in the **FlowLvl** register. With differing HALT and RESUME levels, hysteresis can be defined in the RxFIFO fill level for the receiver flow control activity.

When the RxFIFO is filled to a level higher than the HALT level, the MAX3109 sends an XOFF character to stop data transmission. An XON character is sent when the RxFIFO is emptied enough so that the number of words falls to below the RESUME level.

If double-wide (16-bit) XON/XOFF characters are selected by setting the **FlowCtrl[**7:6] bits to 11, then **XON1/XOFF**1 are transmitted before **XON2/XOFF2** whenever a control character is transmitted.

Transmitter Flow Control

If auto transmit control is enabled by the **FlowCtrl**[5:4] bits, the receiver compares all received words with the XOFF and XON characters. When an XOFF character is received, the MAX3109 halts the transmitter from sending further data following any currently transmitting word. The receiver is not affected and continues receiving. Upon receiving an XON character, the transmitter restarts sending data. The received XON and XOFF characters are filtered out and are not stored into the receive FIFO. An interrupt is not generated.

If double-wide (16-bit) XON/XOFF characters are selected by setting the **FlowCtrl**[5:4] bits to 11, then a character matching **XON1/XOFF1** must be received before a character matching **XON2/XOFF2** in order to be interpreted as a control character.

Turn the transmitter off by setting the **MODE1**[1]: TxDisabl bit high before enabling software transmitter flow control.

FIFO Interrupt Triggering

Receive and transmit FIFO fill-dependent interrupts are generated if FIFO trigger levels are defined. When the number of words in the FIFOs reach or exceed a trigger level programmed in the **FIFOTrgLvl** register, an interrupt is generated in **ISR**[3] or **ISR**[4]. The interrupt trigger levels operate independently from the HALT and RESUME flow control levels in AutoRTS or auto software flow control modes.

The FIFO interrupt triggering can be used, for example, for a block data transfer. The trigger level interrupt gives the host an indication that a given block size of data is available for reading in the receive FIFO or available for transfer to the transmit FIFO. If the HALT and RESUME levels are outside of this range, then the UART continues to transmit or receive data during the block read/write operations for uninterrupted data transmission on the bus.

Low-Power Standby Modes

The MAX3109 has sleep and shutdown modes that reduce power consumption during periods of inactivity. In both sleep and shutdown modes, the UART disables specific functional blocks to reduce power consumption.

After sleep or shutdown mode is exited, the internal clock starts up and a period of time is needed for clock stabilization. The **STSInt**[5]: ClkReady bit indicates when the clocks are stable. When an external clock source is used, the ClkReady bit does not indicate clock stability.

Forced-Sleep Mode

In forced-sleep mode, all UART-related on-chip clocking is stopped. The following blocks are inactive: the crystal oscillator, the PLL, the predivider, the receiver, and the transmitter. The I^2C/SPI interface and the registers remain active and the host controller can access them. To force the MAX3109 to enter sleep mode, set the **MODE1**[5]: ForcedSleep bit high. To exit forced-sleep mode, set the ForcedSleep bit low.

Auto-Sleep Mode

The MAX3109 can be configured to operate in auto-sleep mode by setting the **MODE1**[6]: AutoSleep bit high. In auto-sleep mode, the MAX3109 automatically enters sleep mode when all the following conditions are met:

- Both FIFOs are empty.
- There are no pending $\overline{IRQ}$ interrupts.
- There is no activity on any input pins for a period equal to 65,536 UART character lengths.

The same blocks are inactive when the UART is in auto-sleep mode as in forced-sleep mode.

The MAX3109 exits auto-sleep mode as soon as activity is detected on any of the GPIO_, RX_, or $\overline{CTS_}$ inputs.

To manually exit auto-sleep mode, set the **MODE1**[6]: AutoSleep bit low.

Multiple UARTs in Sleep Mode

The MAX3109's two UARTs enter and exit sleep mode separately. When only one UART is in sleep mode, the device stops routing the clock to this UART, reducing power consumption. All other clocking circuitry remains active if the other UART is still active. If both UARTs are in sleep mode, the clocking circuitry is switched off, further reducing power consumption.

Shutdown Mode

Drive the $\overline{RST}$ input to logic-low to enter shutdown mode. Shutdown mode consumes less than 1µA. In shutdown mode, all the MAX3109 circuitry is completely off. This includes the I²C/SPI interface, the registers, the FIFOs, and the clocking circuitry.

When the $\overline{RST}$ input transitions from low to high, the MAX3109 exits shutdown mode and a hardware reset is initiated. The chip initialization is complete when the I²C/SPI controller is able to read out known register contents from the MAX3109. This could, for example, be the DIVLSB register.

The MAX3109 needs to be reprogrammed following a shutdown.

Power-Up and $\overline{IRQ}$

The $\overline{IRQ}$ output only operates when all supplies are active. $\overline{IRQ}$ operates as a hardware active-low interrupt output; $\overline{IRQ}$ is asserted when an interrupt is pending. An $\overline{IRQ}$ interrupt is only possible during normal operation if at least one of the interrupt enable bits in the IRQEn register is set.

In polled mode, any register with a known reset value can be polled to check whether the MAX3109 is ready for operation. If the controller gets a valid response from the polled register, then the MAX3109 is ready for operation.

Interrupt Structure

Figure 16 shows the structure of the interrupt. There are four interrupt source registers: **ISR**, **LSR**, **STSInt**, and **SpclCharInt**. The interrupt sources are divided into top-level and low-level interrupts. The top-level interrupts typically occur more often and can be read out by the host controller directly through **ISR**. The low-level interrupts typically occur less often and their specific source can be read out by the host controller through **LSR**, **STSInt**, or **SpclCharInt**. The three LSBs of **ISR** point to the low-level interrupt registers that contain the details of the interrupt source.

Interrupt Enabling

Every interrupt bit of the four interrupt registers can be enabled or masked through an associated interrupt enable register bit. These are the **IRQEn**, **LSRIntEn**, **SpclChrIntEn**, and **STSIntEn** registers. By default, all interrupts are masked.

Interrupt Clearing

When an interrupt is pending (i.e., $\overline{IRQ}$ is asserted) and **ISR** is read, both the **ISR** bits are cleared and the $\overline{IRQ}$ output is deasserted. Low-level interrupt information does not reassert $\overline{IRQ}$ for the same interrupt, but remains stored in the low-level interrupt registers until each is separately cleared. **SpclCharInt** and **STSInt** are clear-on-read (COR). The **LSR** bits are only cleared when the source of the interrupt is removed, not when **LSR** is read.

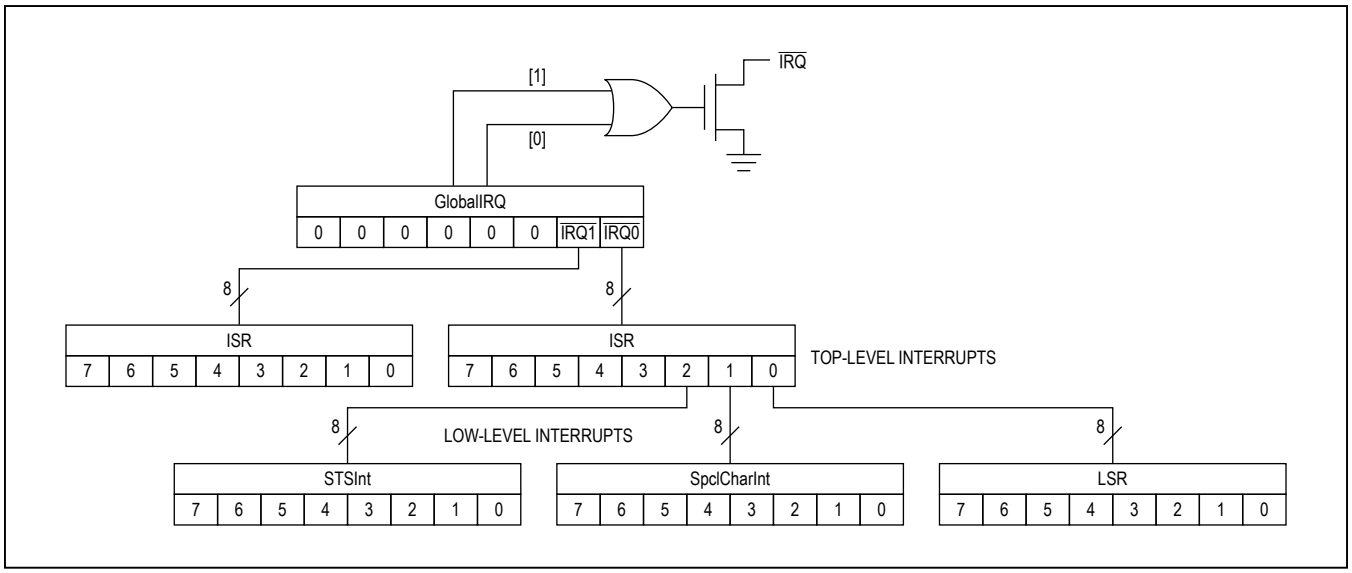

Figure 16. Simplified Interrupt Structure

Register Map

(**Note:** All default reset values are 0x00, unless otherwise noted. All registers are R/W, unless otherwise noted.)

REGISTER	ADDR	BIT 7	BIT 6	BIT 5	BIT 4	BIT 3	BIT 2	BIT 1	BIT 0
FIFO DATA									
RHR[1]	0x00	RData7	RData6	RData5	RData4	RData3	RData2	RData1	RData0
THR[1]	0x00	TData7	TData6	TData5	TData4	TData3	TData2	TData1	TData0
INTERRUPTS									
IRQEn	0x01	CTSIEn	RxEmtyIEn	TFifoEmtyIEn	TxTrgIEn	RxTrgIEn	STSIEn	SpChrIEn	LSRErrIEn
ISR[1, 2]	0x02	CTSInt	RxEmptyInt	TFifoEmptyInt	TxTrgInt	RxTrigInt	STSInt	SpCharInt	LSRErrInt
LSRIntEn	0x03	—	—	NoiseIntEn	RBreakIEn	FrameErrIEn	ParityIEn	ROverrIEn	RTimoutIEn
LSR[1, 2]	0x04	$\overline{\text{CTS}}$bit	—	RxNoise	RxBreak	FrameErr	RxParityErr	RxOverrun	RTimeout
SpclChrIntEn	0x05	—	—	MltDrpIntEn	BREAKIntEn	XOFF2IntEn	XOFF1IntEn	XON2IntEn	XON1IntEn
SpclCharInt[1]	0x06	—	—	MultiDropInt	BREAKInt	XOFF2Int	XOFF1Int	XON2Int	XON1Int
STSIntEn[3]	0x07	TxEmptyIntEn	SleepIntEn	ClkRdyIntEn	—	GPI3IntEn	GPI2IntEn	GPI1IntEn	GPI0IntEn
STSInt[1, 2, 3]	0x08	TxEmptyInt	SleepInt	ClkReady	—	GPI3Int	GPI2Int	GPI1Int	GPI0Int
UART MODES									
MODE1	0x09	—	AutoSleep	ForcedSleep	TrnscvCtrl	RTSHiZ	TxHiZ	TxDisabl	RxDisabl
MODE2	0x0A	EchoSuprs	MultiDrop	Loopback	SpecialChr	RFifoEmptyInv	RxTrgInv	FIFORst	RST
LCR[2]	0x0B	$\overline{\text{RTS}}$bit	TxBreak	ForceParity	EvenParity	ParityEn	StopBits	Length1	Length0
RxTimeOut	0x0C	TimOut7	TimOut6	TimOut5	TimOut4	TimOut3	TimOut2	TimOut1	TimOut0
HDplxDelay	0x0D	Setup3	Setup2	Setup1	Setup0	Hold3	Hold2	Hold1	Hold0
IrDA	0x0E	—	—	TxInv	RxInv	MIR	—	SIR	IrDAEn
FIFOs CONTROL									
FlowLvl	0x0F	Resume3	Resume2	Resume1	Resume0	Halt3	Halt2	Halt1	Halt0
FIFOTrgLvl[2]	0x10	RxTrig3	RxTrig2	RxTrig1	RxTrig0	TxTrig3	TxTrig2	TxTrig1	TxTrig0
TxFIFOLvl[1]	0x11	TxFL7	TxFL6	TxFL5	TxFL4	TxFL3	TxFL2	TxFL1	TxFL0
RxFIFOLvl[1]	0x12	RxFL7	RxFL6	RxFL5	RxFL4	RxFL3	RxFL2	RxFL1	RxFL0
FLOW CONTROL									
FlowCtrl	0x13	SwFlow3	SwFlow2	SwFlow1	SwFlow0	SwFlowEn	GPIAddr	AutoCTS	AutoRTS
XON1	0x14	Bit7	Bit6	Bit5	Bit4	Bit3	Bit2	Bit1	Bit0
XON2	0x15	Bit7	Bit6	Bit5	Bit4	Bit3	Bit2	Bit1	Bit0
XOFF1	0x16	Bit7	Bit6	Bit5	Bit4	Bit3	Bit2	Bit1	Bit0
XOFF2	0x17	Bit7	Bit6	Bit5	Bit4	Bit3	Bit2	Bit1	Bit0
GPIOs									
GPIOConfg[3]	0x18	GP3OD	GP2OD	GP1OD	GP0OD	GP3Out	GP2Out	GP1Out	GP0Out
GPIOData[3]	0x19	GPI3Dat	GPI2Dat	GPI1Dat	GPI0Dat	GPO3Dat	GPO2Dat	GPO1Dat	GPO0Dat
CLOCK CONFIGURATION									
PLLConfig[2, 4]	0x1A	PLLFactor1	PLLFactor0	PreDiv5	PreDiv4	PreDiv3	PreDiv2	PreDiv1	PreDiv0
BRGConfig	0x1B	—	—	4xMode	2xMode	FRACT3	FRACT2	FRACT1	FRACT0
DIVLSB[2]	0x1C	Div7	Div6	Div5	Div4	Div3	Div2	Div1	Div0
DIVMSB	0x1D	Div15	Div14	Div13	Div12	Div11	Div10	Div9	Div8
CLKSource[2, 4]	0x1E	CLKtoRTS	—	—	—	PLLBypass	PLLEn	CystalEn	—
GLOBAL REGISTERS									
GlobalIRQ[1, 2]	0x1F	0	0	0	0	0	0	$\overline{\text{IRQ1}}$	$\overline{\text{IRQ0}}$
GlobIComnd[1]	0x1F	GlbCom7	GlbCom6	GlbCom5	GlbCom4	GlbCom3	GlbCom2	GlbCom1	GlbCom0
SYNCHRONIZATION									
TxSynch[5]	0x20	CLKtoGPIO	TxAutoDis	TrigDelay	SynchEn	TrigSel3	TrigSel2	TrigSel1	TrigSel0
SynchDelay1[5]	0x21	SDelay7	SDelay6	SDelay5	SDelay4	SDelay3	SDelay2	SDelay1	SDelay0
SynchDelay2[5]	0x22	SDelay15	SDelay14	SDelay13	SDelay12	SDelay11	SDelay10	SDelay9	SDelay8
TIMER REGISTERS									
TIMER1[5]	0x23	Timer7	Timer6	Timer5	Timer4	Timer3	Timer2	Timer1	Timer0
TIMER2[5]	0x24	TmrToGPIO	Timer14	Timer13	Timer12	Timer11	Timer10	Timer9	Timer8
REVISION									
RevID[1, 2, 5]	0x25	1	1	0	0	0	0	1	0

*1 Denotes nonread/write mode: **RHR** = R, **THR** = W, **ISR** = COR, **LSR** = R, **SpclCharInt** = COR, **STSInt** = R/COR, **TxFIFOLvl** = R, **RxFIFOLvl** = R, **GlobalIRQ** = R, **GlobIComnd** = W, **RevID** = R.*

*2 Denotes nonzero default reset value: **ISR** = 0x60, **LCR** = 0x05, **FIFOTrgLvl** = 0xFF, **PLLConfig** = 0x01, **DIVLSB** = 0x01, **CLKSource** = 0x18, **GlobalIRQ** = 0x03, **RevID** = 0xC1.*

3 Each UART has four individually assigned GPIO outputs as follows: UART0: GPIO0–GPIO3, UART1: GPIO4–GPIO7.

4 Denotes a register that can only be programmed by accessing UART0.

5 Denotes a register that can only be directly addressed in I^2C mode. Use extended addressing when operating in SPI mode.

Detailed Register Descriptions

The MAX3109 has 8-bit-wide registers. When using SPI control, the extended register location (0x20 through 0x25) can only be accessed by first enabling extended read/writing through **GlobIComnd**. Each UART has an exclusive set of registers. Select a UART to write to by setting the U bit of the command byte in SPI mode or the unique I^{2}C address in I^{2}C mode (see the *Serial Controller Interface* section for more information).

Receive Hold Register (RHR)

ADDRESS:	**0x00**							
MODE:	**R**							
BIT	**7**	**6**	**5**	**4**	**3**	**2**	**1**	**0**
NAME	RData7	RData6	RData5	RData4	RData3	RData2	RData1	RData0
RESET	0	0	0	0	0	0	0	0

Bits 7–0: RDatax

The RHR is the bottom of the receive FIFO and is the register used for reading data out of the receive FIFO. It contains the oldest (first received) character in the receive FIFO. **RHR**[0] is the LSB of the character received at the RX_ input. It is the first data bit of the serial-data word received by the receiver. Reading **RHR** removes the read word from the receive FIFO, clearing space for more data to be received.

Note that the data read out of RHR can be in error. This occurs when the UART receiver is receiving a character at the same time as a value is being read out of RHR and the FIFO level counter is being updated. In the event of this error condition, the result is that a character will be read out twice from the RHR.

To avoid this, the receiver should no be receiving data while the RHR is being read out. This can be achieved via flow control, or prior knowledge of the amount of data that is expected to be received.

Transmit Hold Register (THR)

ADDRESS:	**0x00**							
MODE:	**W**							
BIT	**7**	**6**	**5**	**4**	**3**	**2**	**1**	**0**
NAME	TData7	TData6	TData5	TData4	TData3	TData2	TData1	TData0
RESET	0	0	0	0	0	0	0	0

Bits 7–0: TDatax

The **THR** is the register that the host controller writes data to for subsequent UART transmission. This data is deposited in the transmit FIFO. **THR**[0] is the LSB. It is the first data bit of the serial-data word that the transmitter sends out, immediately after the START bit.

Note that an error can occur in the TxFIFO when a character is written into THR at the same time as the transmitter is transmitting out data via TX. In the event of this error condition, the result is that the character will not be transmitted.

To avoid this, stop the transmitter when writing data to the THR. This can be done via the TxDisable bit in the MODE1 register.

IRQ Enable Register (IRQEn)

ADDRESS:	0x01							
MODE:	R/W							
BIT	**7**	**6**	**5**	**4**	**3**	**2**	**1**	**0**
NAME	CTSIEn	RxEmtyIEn	TFifoEmtyIEn	TxTrgIEn	RxTrgIEn	STSIEn	SpChrIEn	LSRErrIEn
RESET	0	0	0	0	0	0	0	0

The **IRQEn** register is used to enable the $\overline{IRQ}$ physical interrupt. Any of the eight **ISR** interrupt sources can be enabled to generate an interrupt on $\overline{IRQ}$. The **IRQEn** bits only influence the $\overline{IRQ}$ output and do not have any effect on the **ISR** contents or behavior. Every one of the **IRQEn** bits operates on a corresponding ISR bit.

Bit 7: CTSIEn

The CTSIEn bit enables $\overline{IRQ}$ interrupt generation when the CTSInt interrupt is set in **ISR**[7]. Set CTSIEn low to disable $\overline{IRQ}$ generation from CTSInt.

Bit 6: RxEmtyIEn

The RxEmtyIEn bit enables $\overline{IRQ}$ interrupt generation when the RxEmptyInt interrupt is set in **ISR**[6]. Set RxEmtyIEn low to disable $\overline{IRQ}$ generation from RxEmptyInt.

Bit 5: TFifoEmtyIEn

The TFifoEmtyIEn bit enables $\overline{IRQ}$ interrupt generation when the TFifoEmptyInt interrupt is set in **ISR**[5]. Set TFifoEmtyIEn low to disable $\overline{IRQ}$ generation from TFifoEmptyInt.

Bit 4: TxTrgIEn

The TxTrgIEn bit enables $\overline{IRQ}$ interrupt generation when the TxTrigInt interrupt is set in **ISR**[4]. Set TxTrgIEn low to disable $\overline{IRQ}$ generation from TxTrigInt.

Bit 3: RxTrgIEn

The RxTrgIEn bit enables $\overline{IRQ}$ interrupt generation when the RxTrigInt interrupt is set in **ISR**[3]. Set RxTrgIEn low to disable $\overline{IRQ}$ generation from RxTrigInt.

Bit 2: STSIEn

The STSIEn bit enables $\overline{IRQ}$ interrupt generation when the STSInt interrupt is set in **ISR**[2]. Set STSIEn low to disable $\overline{IRQ}$ generation from STSInt.

Bit 1: SpChrIEn

The SpChrIEn bit enables $\overline{IRQ}$ interrupt generation when the SpCharInt interrupt is set in **ISR**[1]. Set SpChrIEn low to disable $\overline{IRQ}$ generation from SpCharInt.

Bit 0: LSRErrIEn

The LSRErrIEn bit enables $\overline{IRQ}$ interrupt generation when the LSRErrInt interrupt is set in **ISR**[0]. Set LSRErrIEn low to disable $\overline{IRQ}$ generation from LSRErrInt.

Interrupt Status Register (ISR)

ADDRESS:	0x02							
MODE:	COR							
BIT	**7**	**6**	**5**	**4**	**3**	**2**	**1**	**0**
NAME	CTSInt	RxEmptyInt	TFifoEmptyInt	TxTrigInt	RxTrigInt	STSInt	SpCharInt	LSRErrInt
RESET	0	1	1	0	0	0	0	0

The Interrupt Status register provides an overview of all interrupts generated by the MAX3109. Both the interrupt bits and any pending interrupts on $\overline{IRQ}$ are cleared after reading **ISR**. When the MAX3109 is operated in polled mode, **ISR** can be polled to establish the UART's status. In interrupt-driven mode, $\overline{IRQ}$ interrupts are enabled by the appropriate **IRQEn** bits. The **ISR** contents either give direct information on the cause for the interrupt or point to other registers that contain more detailed information.

Bit 7: CTSInt

The CTSInt interrupt is generated when a logic state transition occurs at the $\overline{CTS_}$ input. CTSInt is cleared after **ISR** is read. The current logic state of the $\overline{CTS_}$ input can be read out through the **LSR**[7]: $\overline{CTS}$bit bit.

Bit 6: RxEmptyInt

The RxEmptyInt interrupt is generated when the receive FIFO is empty. RxEmptyInt is cleared after **ISR** is read. Its meaning can be inverted by the **MODE2**[3]: RFifoEmptyInv bit.

Bit 5: TFifoEmptyInt

The TFifoEmptyInt interrupt is generated when the transmit FIFO is empty and the transmitter is transmitting the last character. Use **STSInt**[7]: TxEmptyInt to determine when the last character has completed transmission. TFifoEmptyInt is cleared after **ISR** is read.

Bit 4: TxTrigInt

The TxTrigInt interrupt is generated when the number of characters in the transmit FIFO is equal to or greater than the transmit FIFO trigger level defined in **FIFOTrgLvl**[3:0]. TxTrigInt is cleared when the transmit FIFO level falls below the trigger level or after **ISR** is read. TxTrigInt can be used as a warning that the transmit FIFO is nearing overflow.

Bit 3: RxTrigInt

The RxTrigInt interrupt is generated when the receive FIFO fill level reaches the receive FIFO trigger level defined in **FIFOTrgLvl**[7:4]. RxTrigInt can be used as an indication that the receive FIFO is nearing overrun. It can also be used to report that a known number of words are available that can be read out in one block. The meaning of RxTrigInt can be inverted by the **MODE2**[2]: RxTrigInv bit. RxTrigInt is cleared after **ISR** is read.

Bit 2: STSInt

The STSInt interrupt is generated when any interrupt in the **STSInt** register that is enabled by a **STSIntEn** bit is high. STSInt is cleared after **ISR** is read, but the interrupt in **STSInt** that caused this interrupt remains set. See the **STSInt** register description for details about this interrupt.

Bit 1: SpCharInt

The SpCharInt interrupt is generated when a special character is received, a line break is detected, or an address character is received in multidrop mode. SpCharInt is cleared after **ISR** is read, but the interrupt in **SpclCharInt** that caused this interrupt remains set. See the **SpclCharInt** register description for details about this interrupt.

Bit 0: LSRErrInt

The LSRErrInt interrupt is generated when any interrupts in **LSR** that are enabled by corresponding bits in **LSRIntEn** are set. This bit is cleared after **ISR** is read. See the **LSR** register description for details about this interrupt.

Line Status Interrupt Enable Register (LSRIntEn)

ADDRESS:	0x03							
MODE:	R/W							
BIT	**7**	**6**	**5**	**4**	**3**	**2**	**1**	**0**
NAME	—	—	NoiseIntEn	RBreakIEn	FrameErrIEn	ParityIEn	ROverrIEn	RTimoutIEn
RESET	0	0	0	0	0	0	0	0

LSRIntEn allows routing of **LSR** interrupts to **ISR**[0]. The **LSRIntEn** bits only influence the **ISR**[0]: LSRErrInt bit and do not have any effect on the **LSR** contents or behavior. Bits 5 to 0 of the **LSRIntEn** register operate on a corresponding **LSR** bit, while bits 7 and 6 are not used.

Bits 7 and 6: No Function

Bit 5: NoiseIntEn

Set the NoiseIntEn bit high to enable routing the **LSR**[5]: RxNoise interrupt to **ISR**[0]. If NoiseIntEn is set low, RxNoise is not routed to **ISR**[0].

Bit 4: RBreakIEn

Set the RBreakIEn bit high to enable routing the **LSR**[4]: RxBreak interrupt to **ISR**[0]. If RBreakIEn is set low, RxBreak is not routed to **ISR**[0].

Bit 3: FrameErrIEn

Set the FrameErrIEn bit high to enable routing the **LSR**[3]: FrameErr interrupt to **ISR**[0]. If FrameErrIEn is set low, FrameErr is not routed to **ISR**[0].

Bit 2: ParityIEn

Set the ParityIEn bit high to enable routing the **LSR**[2]: RxParityErr interrupt to **ISR**[0]. If ParityIEn is set low, RxParityErr is not routed to **ISR**[0].

Bit 1: ROverrIEn

Set the ROverrIEn bit high to enable routing the **LSR**[1]: RxOverrun interrupt to **ISR**[0]. If ROverrIEn is set low, RxOverrun is not routed to **ISR**[0].

Bit 0: RTimoutIEn

Set the RTimoutIEn bit high to enable routing the **LSR**[0]: RTimeout interrupt to **ISR**[0]. If RTimoutIEn is set low, RTimeout is not routed to **ISR**[0].

Line Status Register (LSR)

ADDRESS:	0x04							
MODE:	R							
BIT	**7**	**6**	**5**	**4**	**3**	**2**	**1**	**0**
NAME	$\overline{\text{CTS}}$bit	—	RxNoise	RxBreak	FrameErr	RxParityErr	RxOverrun	RTimeout
RESET	X	0	0	0	0	0	0	0

LSR contains all error information related to the word most recently read out from the RxFIFO through **RHR**. The **LSR** bits are not cleared after **LSR** is read; these bits stay set until the next character is read out of **RHR**, with the exception of **LSR**[1], which is cleared by reading either **RHR** or **LSR**. **LSR** also contains the current logic state of the $\overline{\text{CTS}}$ input.

Bit 7: $\overline{\text{CTS}}$bit

The $\overline{\text{CTS}}$bit bit reflects the current logic state of the $\overline{\text{CTS_}}$ input. This bit is cleared when the $\overline{\text{CTS_}}$ input is low and set when it is high. Following a power-up or reset, the logic state of $\overline{\text{CTS}}$bit depends on the state of the $\overline{\text{CTS_}}$ input.

Bit 6: No Function

Bit 5: RxNoise

If noise is detected on the RX_ input during reception of a character, the RxNoise interrupt is generated for that character. **LSR**[5] corresponds to the character most recently read from **RHR**. RxNoise is cleared after the character following the "noisy character" is read out from **RHR**. RxNoise generates an interrupt in **ISR**[0] if enabled by **LSRIntEn**[5].

Bit 4: RxBreak

If a line break (RX input low for a period longer than the programmed character duration) is detected, a break character is put in the RxFIFO and the RxBreak interrupt is generated for this character. A break character is represented by an all-zeros data character. The RxBreak interrupt distinguishes a regular character with all zeros from a break character. **LSR**[4] corresponds to the current character most recently read from **RHR**. RxBreak is cleared after the character following the break character is read out from **RHR**. RxBreak generates an interrupt in **ISR**[0] if enabled by **LSRIntEn**[4].

Bit 3: FrameErr

The FrameErr interrupt is generated when the received data frame does not match the expected frame format in length. A frame error is related to errors in expected STOP bits. **LSR**[3] corresponds to the frame error of the character most recently read from **RHR**. FrameErr is cleared after the character following the affected character is read out from **RHR**. FrameErr generates an interrupt in **ISR**[0] if enabled by **LSRIntEn**[3].

Bit 2: RxParityErr

The RxParityErr interrupt is generated when the parity computed on the character being received does not match the received character's parity bit. **LSR**[2] indicates a parity error for the character most recently read from **RHR**. RxParityErr is cleared when the character following the affected character is read out from **RHR**.

In 9-bit multidrop mode (**MODE2**[6] is logic 1) the receiver does not check parity and the 9th bit (address/data) is stored in **LSR**[2].

RxParityErr generates an interrupt in **ISR**[0] if enabled by **LSRIntEn**[2].

Bit 1: RxOverrun

The RxOverrun interrupt is generated when the receive FIFO is full and additional data is received that does not fit into the receive FIFO. The receive FIFO retains the data that it already contains and discards all new data. RxOverrun is cleared after LSR is read or the RxFIFO level falls below its maximum. RxOverrun generates an interrupt in **ISR**[0] if enabled by **LSRIntEn**[1].

Bit 0: RTimeout

The RTimeout interrupt indicates that stale data is present in the receive FIFO. RTimeout is set when all of the characters in the RxFIFO have been present for at least as long as the period programmed into the **RxTimeOut** register.

The timeout counter restarts whenever **RHR** is read or a new character is received by the RxFIFO. If the value in **RxTimeOut** is zero, RTimeout is disabled. RTimeout is cleared after a word is read out of the RxFIFO or a new word is received. RTimeout generates an interrupt in **ISR**[0] if enabled by **LSRIntEn**[0].

Special Character Interrupt Enable Register (SpcIChrIntEn)

ADDRESS:	**0x05**							
MODE:	**R/W**							
BIT	**7**	**6**	**5**	**4**	**3**	**2**	**1**	**0**
NAME	—	—	MltDrpIntEn	BREAKIntEn	XOFF2IntEn	XOFF1IntEn	XON2IntEn	XON1IntEn
RESET	0	0	0	0	0	0	0	0

SpcIChrIntEn allows routing of **SpcICharInt** interrupts to **ISR**[1]. The **SpcIChrIntEn** bits only influence the **ISR**[1]: SpCharInt bit and do not have any effect on the **SpcICharInt** contents or behavior.

Bits 7 and 6: No Function

Bit 5: MltDrpIntEn

Set the MltDrpIntEn bit high to enable routing the **SpcICharInt**[5]: MultiDropInt interrupt to **ISR**[1]. If MltDrpIntEn is set low, MultiDropInt is not routed to **ISR**[1].

Bit 4: BREAKIntEn

Set the BREAKIntEn bit high to enable routing the **SpcICharInt**[4]: BREAKInt interrupt to **ISR**[1]. If BREAKIntEn is set low, BREAKInt is not routed to **ISR**[1].

Bit 3: XOFF2IntEn

Set the XOFF2IntEn bit high to enable routing the **SpcICharInt**[3]: XOFF2Int interrupt to **ISR**[1]. If XOFF2IntEn is set low, XOFF2Int is not routed to **ISR**[1].

Bit 2: XOFF1IntEn

Set the XOFF1IntEn bit high to enable routing the **SpcICharInt**[2]: XOFF1Int interrupt to **ISR**[1]. If XOFF1IntEn is set low, XOFF1Int is not routed to **ISR**[1].

Bit 1: XON2IntEn

Set the XON2IntEn bit high to enable routing the **SpcICharInt**[1]: XON2Int interrupt to **ISR**[1]. If XON2IntEn is set low, XON2Int is not routed to **ISR**[1].

Bit 0: XON1IntEn

Set the XON1IntEn bit high to enable routing the **SpcICharInt**[0]: XON1Int interrupt to **ISR**[1]. If XON1IntEn is set low, XON1Int is not routed to **ISR**[1].

Special Character Interrupt Register (SpclCharInt)

ADDRESS:	0x06							
MODE:	COR							
BIT	**7**	**6**	**5**	**4**	**3**	**2**	**1**	**0**
NAME	—	—	MultiDropInt	BREAKInt	XOFF2Int	XOFF1Int	XON2Int	XON1Int
RESET	0	0	0	0	0	0	0	0

SpclCharInt contains interrupts that are generated when a special character is received, an address is received in multidrop mode, or a line break occurs.

Bits 7 and 6: No Function

Bit 5: MultiDropInt

The MultiDropInt interrupt is generated when the MAX3109 receives an address character in 9-bit multidrop mode, enabled in **MODE2**[6]. MultiDropInt is cleared after **SpclCharInt** is read. MultiDropInt generates an interrupt in **ISR**[1] if enabled by **SpclChrIntEn**[5].

Bit 4: BREAKInt

The BREAKInt interrupt is generated when a line break (RX_ low for longer than one character length) is detected by the receiver. BREAKInt is cleared after **SpclCharInt** is read. BREAKInt generates an interrupt in **ISR**[1] if enabled by **SpclChrIntEn**[4].

Bit 3: XOFF2Int

The XOFF2Int interrupt is generated when both an XOFF2 special character is received and special character detection is enabled by **MODE2**[4]. XOFF2Int is cleared after **SpclCharInt** is read. XOFF2Int generates an interrupt in **ISR**[1] if enabled by **SpclChrIntEn**[3].

Bit 2: XOFF1Int

The XOFF1Int interrupt is generated when both an XOFF1 special character is received and special character detection is enabled by **MODE2**[4]. XOFF1Int is cleared after **SpclCharInt** is read. XOFF1Int generates an interrupt in **ISR**[1] if enabled by **SpclChrIntEn**[2].

Bit 1: XON2Int

The XON2Int interrupt is generated when both an XON2 special character is received and special character detection is enabled by **MODE2**[4]. XON2Int is cleared after **SpclCharInt** is read. XON2Int generates an interrupt in **ISR**[1] if enabled by **SpclChrIntEn**[1].

Bit 0: XON1Int

The XON1Int interrupt is generated when both an XON1 special character is received and special character detection is enabled by **MODE2**[4]. XON1Int is cleared after **SpclCharInt** is read. XON1Int generates an interrupt in **ISR**[1] if enabled by **SpclChrIntEn**[0].

STS Interrupt Enable Register (STSIntEn)

ADDRESS:	0x07							
MODE:	R/W							
BIT	**7**	**6**	**5**	**4**	**3**	**2**	**1**	**0**
NAME	TxEmptyIntEn	SleepIntEn	ClkRdyIntEn	—	GPI3IntEn	GPI2IntEn	GPI1IntEn	GPI0IntEn
RESET	0	0	0	0	0	0	0	0

STSIntEn allows routing of **STSInt** interrupts to **ISR**[2]. The **STSIntEn** bits only influence the **ISR**[2]: STSInt bit and do not have any effect on the **STSInt** contents or behavior, with the exception of the GPIxIntEn interrupt enable bits, which control the generation of the **STSInt**.

Bit 7: TxEmptyIntEn

Set the TxEmptyIntEn bit high to enable routing the **STSInt**[7]: TxEmptyInt interrupt to **ISR**[2]. If TxEmptyIntEn is set low, TxEmptyInt is not routed to **ISR**[2].

Bit 6: SleepIntEn

Set the SleepIntEn bit high to enable routing the **STSInt**[6]: SleepInt interrupt to **ISR**[2]. If SleepIntEn is set low, SleepInt is not routed to **ISR**[2].

Bit 5: ClkRdyIntEn

Set the ClkRdyIntEn bit high to enable routing the **STSInt**[6]: ClkReady interrupt to **ISR**[2]. If ClkRdyIntEn is set low, ClkReady is not routed to **ISR**[2].

Bit 4: No Function

Bits 3–0: GPIxIntEn

Each UART has four individually assigned GPIO outputs as follows: UART0: GPIO0–GPIO3, UART1: GPIO4–GPIO7. For example, for UART1: GP0OD configures GPIO4, GP1OD configures GPIO5, GP2OD configures GPIO6 and GP3OD configures GPIO7.

Set the GPIxIntEn bits high to enable generating the **STSInt**[3:0]: GPIxInt interrupts. If any of the GPIxIntEn bits are set low, the associated GPIxInt interrupts are not generated.

Status Interrupt Register (STSInt)

ADDRESS:	0x08							
MODE:	R/COR							
BIT	**7**	**6**	**5**	**4**	**3**	**2**	**1**	**0**
NAME	TxEmptyInt	SleepInt	ClkReady	—	GPI3Int	GPI2Int	GPI1Int	GPI0Int
RESET	0	0	0	0	0	0	0	0

Bit 7: TxEmptyInt

The TxEmptyInt interrupt is generated when both the TxFIFO is empty and the last character has completed transmission. TxEmptyInt is cleared after **STSInt** is read. TxEmptyInt generates an interrupt in **ISR**[2] if enabled by **STSIntEn**[7].

Bit 6: SleepInt

The SleepInt status bit is generated when the MAX3109 enters sleep mode. SleepInt is cleared when the UART exits sleep mode. This status bit is also cleared when the UART clock is disabled and is not cleared by reading **STSInt**. SleepInt generates an interrupt in **ISR**[2] if enabled by **STSIntEn**[6].

Bit 5: ClkReady

The ClkReady status bit is generated when the clock, the predivider, and the PLL have settled, signifying that the MAX3109 is ready for data communication. The ClkReady bit only works with the crystal oscillator. It does not work with external clocking through XIN.

ClkReady is cleared when the clock is disabled and is not cleared after **STSInt** is read. ClkReady generates an interrupt in **ISR**[2] if enabled by **STSIntEn**[5].

Bit 4: No Function

Bits 3–0: GPIxInt

Each UART has four individually assigned GPIO outputs as follows: UART0: GPIO0–GPIO3, UART1: GPIO4–GPIO7. For example, for UART1: GP0OD configures GPIO4, GP1OD configures GPIO5, GP2OD configures GPIO6 and GP3OD configures GPIO7.

The GPIxInt interrupts are generated when a change of logic state occurs on the associated GPIO input. The GPIxInt interrupts are cleared after **STSInt** is read. The GPIxInt interrupts generate an interrupt in **ISR**[2] if enabled by the corresponding bits in **STSIntEn**[3:0].

MODE1 Register

ADDRESS:	0x09							
MODE:	R/W							
BIT	**7**	**6**	**5**	**4**	**3**	**2**	**1**	**0**
NAME	—	AutoSleep	ForcedSleep	TrnscvCtrl	RTSHiZ	TxHiZ	TxDisabl	RxDisabl
RESET	0	0	0	0	0	0	0	0

Bit 6: AutoSleep

Set the AutoSleep bit high to set the MAX3109 to automatically enter low-power sleep mode after a period of no activity (see the *Auto-Sleep Mode* section). An interrupt is generated in **STSInt**[6]: SleepInt when the MAX3109 enters sleep mode.

Bit 5: ForcedSleep

Set the ForcedSleep bit high to force the MAX3109 into low-power sleep mode (see the *Forced-Sleep Mode* section). The current sleep state can be read out through the ForcedSleep bit, even when the UART is in sleep mode.

Bit 4: TrnscvCtrl

Set the TrnscvCtrl bit high to enable auto transceiver direction control mode. $\overline{\text{RTS_}}$ automatically controls the transceiver's transmit/receive enable/disable inputs in this mode. $\overline{\text{RTS_}}$ is logic-low so that the transceiver is in receive mode with the transmitter disabled until the TxFIFO contains data available for transmission, at which point $\overline{\text{RTS_}}$ is automatically set logic-high before the transmitter sends out the data. Once the transmitter is empty, $\overline{\text{RTS_}}$ is automatically forced low again.

Setup and hold times for $\overline{\text{RTS_}}$ with respect to the TX_ output can be defined through the **HDplxDelay** register. A transmitter empty interrupt is generated in **ISR**[5] when the TxFIFO is empty.

Bit 3: RTSHiZ

Set the RTSHiZ bit high to three-state $\overline{\text{RTS_}}$.

Bit 2: TxHiZ

Set the TxHiZ bit high to three-state the TX_ output.

Bit 1: TxDisabl

Set the TxDisabl bit high to disable transmission. If the TxDisabl bit is set high during transmission, the transmitter completes sending out the current character and then ceases transmission. Data still present in the transmit FIFO remains in the TxFIFO. The TX_ output is set to logic-high after transmission.

In auto transceiver direction control mode, TxDisabl is high when the transmitter is completely empty.

Bit 0: RxDisabl

Set the RxDisabl bit high to disable the receiver of the selected UART so that the receiver stops receiving data. All data present in the receive FIFO remains in the RxFIFO.

MODE2 Register

ADDRESS:	0x0A							
MODE:	R/W							
BIT	**7**	**6**	**5**	**4**	**3**	**2**	**1**	**0**
NAME	EchoSuprs	MultiDrop	Loopback	SpecialChr	RFifoEmptyInv	RxTrigInv	FIFORst	RST
RESET	0	0	0	0	0	0	0	0

Bit 7: EchoSuprs

Set the EchoSuprs bit high to discard any data that the MAX3109 receives when its transmitter is busy transmitting. In half-duplex communication such as RS-485 and IrDA, this allows blocking of the locally echoed data. The receiver can block data for an extended time after the transmitter ceases transmission by programming a hold time in **HDplxDelay**[3:0].

Bit 6: MultiDrop

Set the MultiDrop bit high to enable the 9-bit multidrop mode. If this bit is set, parity checking is not performed by the receiver and parity generation is not done by the transmitter. The address/data indication takes the place of the parity bit in received and transmitted data words. The parity error interrupt in **LSR**[2] has a different meaning in multidrop mode: it represents the 9th bit (address/data indication) that is received with each 9-bit data character.

Bit 5: Loopback

Set the Loopback bit high to enable internal local loopback mode. This internally connects TX_ to RX_ and also $\overline{\text{RTS_}}$ to $\overline{\text{CTS_}}$. In local loopback mode, the TX_ output and the RX_ input are disconnected from the internal transmitter and receiver. The TX_ output is in three-state. The $\overline{\text{RTS_}}$ output remains connected to the internal logic and reflects the logic state programmed in **LCR**[7]. The $\overline{\text{CTS_}}$ input is disconnected from $\overline{\text{RTS_}}$ and the internal logic. $\overline{\text{CTS_}}$ thus remains in a high-impedance state.

Bit 4: SpecialChr

Set the SpecialChr bit high to enable special character detection. The receiver can detect up to four special characters, as selected in **FlowCtrl**[5:4] and defined in the **XON1**, **XON2**, **XOFF1**, and/or **XOFF2** registers, optionally in combination with GPIO_ inputs if enabled through **FlowCtrl**[2]: GPIAddr. When a special character is received, it is put into the RxFIFO and a special character detect interrupt is generated in **ISR**[1].

Special character detection can be used in addition to auto XON/XOFF flow control if enabled by **FlowCtrl**[3]: SwFlowEn. In this case, XON/XOFF flow control is limited to single byte XON and XOFF characters (**XON1** and **XOFF1**), and only two special characters can be defined (**XON2** and **XOFF2**).

Bit 3: RFifoEmtyInv

Set the RFifoEmtyInv bit high to invert the meaning of the receiver empty interrupt in **ISR**[6]: RxEmptyInt. If RFifoEmtyInv is set low, RxEmptyInt is generated when the receive FIFO is empty. If RFifoEmtyInv is set high, RxEmptyInt is generated when data is put into the empty receive FIFO.

Bit 2: RxTrigInv

Set the RxTrigInv bit high to invert the meaning of the RxFIFO triggering. If the RxTrgInv bit is set low, an interrupt is generated in **ISR**[3]: RxTrigInt when the RxFIFO fill level is filled up to above the trigger level programmed into **FIFOTrgLvl**[7:4]. If RxTrigInv is set high, an interrupt is generated in **ISR**[3] when the RxFIFO is emptied to below the trigger level programmed into **FIFOTrgLvl**[7:4].

Bit 1: FIFORst

Set the FIFORst bit high to clear all data contents from both the receive and transmit FIFOs. After a FIFO reset, set FIFORst low to continue normal operation.

Bit 0: RST

Set the RST bit high to initiate software reset for the selected UART in the MAX3109. The I^2C/SPI bus stays active during this reset; communication with the MAX3109 is possible while RST is set. All register bits in the selected UART are reset to their reset state and all FIFOs are cleared during a reset.

Set RST low to continue normal operation after a software reset. The MAX3109 requires reprogramming following a software reset.

Line Control Register (LCR)

ADDRESS:	0x0B							
MODE:	R/W							
BIT	**7**	**6**	**5**	**4**	**3**	**2**	**1**	**0**
NAME	$\overline{\text{RTS}}$bit	TxBreak	ForceParity	EvenParity	ParityEn	StopBits	Length1	Length0
RESET	0	0	0	0	0	1	0	1

Bit 7: $\overline{\text{RTS}}$bit

The $\overline{\text{RTS}}$bit bit provides direct control of the $\overline{\text{RTS_}}$ output logic state. If $\overline{\text{RTS}}$bit is logic 1, then $\overline{\text{RTS_}}$ is logic 1; if it is logic 0, then $\overline{\text{RTS_}}$ is logic 0. $\overline{\text{RTS}}$bit only works when **CLKSource**[7]: CLKtoRTS is set low.

Bit 6: TxBreak

Set the TxBreak bit high to generate a line break whereby the TX_ output is held low. TX_ remains low until TxBreak is set low.

Bit 5: ForceParity

The ForceParity bit enables forced parity that overrides normal parity generation. Set both the **LCR**[3]: ParityEn and ForceParity bits high to use forced parity. In forced-parity mode, the parity bit is forced high by the transmitter if the **LCR**[4]: EvenParity bit is low. The parity bit is forced low if EvenParity is high. Forced parity mode enables the transmitter to control the address/data bit in 9-bit multidrop communication.

Bit 4: EvenParity

Set the EvenParity bit high to enable even parity for both the transmitter and receiver. If EvenParity is set low, odd parity is used.

Bit 3: ParityEn

Set the ParityEn bit high to enable the use of a parity bit on the TX_ and RX_ interfaces. Set the ParityEn bit low to disable parity usage.

If ParityEn is set low, then no parity bit is generated by the transmitter or expected by the receiver. If ParityEn is set high, the transmitter generates the parity bit whose polarity is defined in **LCR**[4]: EvenParity, and the receiver checks the parity bit according to the same polarity.

Bit 2: StopBits

The StopBits bit defines the number of stop bits and depends on the length of the word programmed in **LCR**[1:0] (Table 1). For example, when StopBits is set high and the word length is 5, the transmitter generates a word with a stop bit length equal to 1.5 baud periods. Under these conditions, the receiver recognizes a stop bit length greater than a one-bit duration.

Bits 1 and 0: Lengthx

The Lengthx bits configure the length of the words that the transmitter generates and the receiver checks for at the asynchronous TX_ and RX_ interfaces (Table 2).

Table 1. StopBits Truth Table

StopBits	WORD LENGTH	STOP BIT LENGTH
0	5, 6, 7, 8	1
1	5	1–1.5
1	6, 7, 8	2

Table 2. Lengthx Truth Table

Length1	Length0	WORD LENGTH
0	0	5
0	1	6
1	0	7
1	1	8

Receiver Timeout Register (RxTimeOut)

ADDRESS:	0x0C							
MODE:	R/W							
BIT	**7**	**6**	**5**	**4**	**3**	**2**	**1**	**0**
NAME	TimOut7	TimOut6	TimOut5	TimOut4	TimOut3	TimOut2	TimOut1	TimOut0
RESET	0	0	0	0	0	0	0	0

Bits 7–0: TimOutx

The **RxTimeOut** register allows programming a time delay from after the last (newest) character in the receive FIFO was received until a receive data timeout interrupt is generated in **LSR**[0]. The units of TimOutx are measured in complete character frames, which are dependent on the character length, parity, and STOP bit settings, and baud rate. If the value in **RxTimeOut** equals zero, a timeout interrupt is not generated.

HDplxDelay Register

ADDRESS:	0x0D							
MODE:	R/W							
BIT	**7**	**6**	**5**	**4**	**3**	**2**	**1**	**0**
NAME	Setup3	Setup2	Setup1	Setup0	Hold3	Hold2	Hold1	Hold0
RESET	0	0	0	0	0	0	0	0

The **HDplxDelay** register allows programming setup and hold times between $\overline{\text{RTS_}}$ transitions and TX_ output activity in auto transceiver direction control mode, enabled by setting the **MODE1**[4]: TrnscvCtrl bit high. The hold time can also be used to ensure echo suppression in half-duplex communication. **HDplxDelay** functions in 2x and 4x rate modes.

Bits 7–4: Setupx

The Setupx bits define a setup time for $\overline{\text{RTS_}}$ to transition high before the transmitter starts transmission of its first character in auto transceiver direction control mode, enabled by setting the **MODE1**[4]: TrnscvCtrl bit high. This allows the MAX3109 to account for skew times between the external transmitter's enable delay and propagation delays. Setupx can also be used to fix a stable state on the transmission line prior to the start of transmission.

The resolution of the **HDplxDelay** setup time delay is one bit interval, or one over the baud rate; this delay is baud-rate dependent. The maximum delay is 15 bit intervals.

Bits 3–0: Holdx

The Holdx bits define a hold time for $\overline{\text{RTS_}}$ to be held high after the transmitter ends transmission of its last character in auto transceiver direction control mode, enabled by setting the **MODE1**[4]: TrnscvCtrl bit high. $\overline{\text{RTS_}}$ transitions low after the hold time delay, which starts after the last STOP bit was sent. This keeps the external transmitter enabled during the hold time duration.

The Holdx bits also define a delay in echo suppression mode, enabled by setting the **MODE2**[7]: EchoSuprs bit high. See the *Echo Suppression* section for more information.

The resolution of the **HDplxDelay** hold time delay is one bit interval, or one over the baud rate. Thus, this delay is baud rate dependent. The maximum delay is 15 bit intervals.

IrDA Register

ADDRESS:	0x0E							
MODE:	R/W							
BIT	**7**	**6**	**5**	**4**	**3**	**2**	**1**	**0**
NAME	—	—	TxInv	RxInv	MIR	—	SIR	IrDAEn
RESET	0	0	0	0	0	0	0	0

The **IrDA** register allows selection of IrDA SIR- and MIR-compliant pulse shaping at the TX_ and RX_ interfaces. It also allows inversion of the TX_ and RX_ logic, separate from whether IrDA pulse shaping is enabled or not.

Bits 7, 6, and 2: No Function

Bit 5: TxInv

Set the TxInv bit high to invert the logic at the TX_ output. This functionality is separate from IrDA operation.

Bit 4: RxInv

Set the RxInv bit high to invert the logic at the RX_ input. This functionality is separate from IrDA operation.

Bit 3: MIR

Set the MIR and IrDAEn bits high to select IrDA 1.1 (MIR) with 1/4th period pulse widths.

Bit 1: SIR

Set the SIR and IrDAEn bits high to select IrDA 1.0 pulses (SIR) with 3/16th period pulse widths.

Bit 0: IrDAEn

Set the IrDAEn bit high to program the MAX3109 to produce IrDA-compliant pulses at the TX_ output and expect IrDAcompliant pulses at the RX_ input. If IrDAEn is set low, normal (non-IrDA) pulses are generated by the transmitter and expected by the receiver. Use IrDAEn in conjunction with the SIR or MIR bits to select the pulse width.

Flow Level Register (FlowLvl)

ADDRESS:	0x0F							
MODE:	R/W							
BIT	**7**	**6**	**5**	**4**	**3**	**2**	**1**	**0**
NAME	Resume3	Resume2	Resume1	Resume0	Halt3	Halt2	Halt1	Halt0
RESET	0	0	0	0	0	0	0	0

FlowLvl is used for selecting the RxFIFO threshold levels used for auto software (XON/XOFF) and hardware ($\overline{\text{RTS_}}$/$\overline{\text{CTS_}}$) flow control.

Bits 7–4: Resumex

The Resumex bits set the receive FIFO threshold at which an XON character is automatically sent in auto software flow control mode or $\overline{\text{RTS_}}$ is automatically asserted in AutoRTS mode. These flow control actions occur once the RxFIFO is emptied to below the value in Resumex. This signals the far-end station to resume transmission. The threshold level is calculated as 8 x Resumex. The resulting possible threshold-level range is 0 to 120 (decimal).

Bits 3–0: Haltx

The Haltx bits set the receive FIFO threshold level at which an XOFF character is automatically sent in auto software flow control mode or $\overline{\text{RTS_}}$ is automatically deasserted in AutoRTS mode. These flow control actions occur once the RxFIFO is filled to above the value in Haltx. This signals the far-end station to halt transmission. The threshold level is calculated as 8 x Haltx. The resulting possible threshold-level range is 0 to 120 (decimal).

FIFO Interrupt Trigger Level Register (FIFOTrgLvl)

ADDRESS:	0x10							
MODE:	R/W							
BIT	**7**	**6**	**5**	**4**	**3**	**2**	**1**	**0**
NAME	RxTrig3	RxTrig2	RxTrig1	RxTrig0	TxTrig3	TxTrig2	TxTrig1	TxTrig0
RESET	1	1	1	1	1	1	1	1

Bits 7–4: RxTrigx

The RxTrigx bits allow definition of the receive FIFO threshold level at which the UART generates an interrupt in **ISR**[3]. This interrupt can be used to signal that either the receive FIFO is nearing overflow or a predefined number of FIFO locations are available for being read out in one block, depending on the state of the **MODE2**[2]: RxTrigInv bit.

The selectable threshold resolution is eight FIFO locations, so the actual FIFO trigger level is calculated as 8 x RxTrigx. The resulting possible trigger-level range is 0 to 120 (decimal).

Bits 3–0: TxTrigx

The TxTrigx bits allow definition of the transmit FIFO threshold level at which the MAX3109 generates an interrupt in **ISR**[4]. This interrupt can be used to manage data flow to the transmit FIFO. For example, if the trigger level is defined near the bottom of the TxFIFO, the host knows that a predefined number of FIFO locations are available for being written to in one block. Alternatively, if the trigger level is set near the top of the FIFO, the host is warned when the transmit FIFO is nearing overflow. The selectable threshold resolution is eight FIFO locations, so the actual FIFO trigger level is calculated as 8 x TxTrigx. The resulting possible trigger-level range is 0 to 120 (decimal).

Transmit FIFO Level Register (TxFIFOLvl)

ADDRESS:	0x11							
MODE:	R							
BIT	**7**	**6**	**5**	**4**	**3**	**2**	**1**	**0**
NAME	TxFL7	TxFL6	TxFL5	TxFL4	TxFL3	TxFL2	TxFL1	TxFL0
RESET	0	0	0	0	0	0	0	0

Bits 7–0: TxFLx

The **TxFIFOLvl** register represents the current number of words in the transmit FIFO whenever the transmit UART is idle. When the transmit UART actively sends out characters, the value in this register can sometimes be inaccurate if this register is read at the same time that the transmit UART updates the transmit FIFO. First disable the transmitter to get an accurate value. To manage the transmit FIFO even when the transmit UART is active, do not use this register to determine transmit FIFO state. Rather, use the TFifoEmpty bit or the TFifoTrigInt bits.

Receive FIFO Level Register (RxFIFOLvl)

ADDRESS:	0x12							
MODE:	R							
BIT	**7**	**6**	**5**	**4**	**3**	**2**	**1**	**0**
NAME	RxFL7	RxFL6	RxFL5	RxFL4	RxFL3	RxFL2	RxFL1	RxFL0
RESET	0	0	0	0	0	0	0	0

Bits 7–0: RxFLx

The RxFIFOLvl register represents the current number of words in the receive FIFO whenever the receive UART is idle. When the receive UART actively receives characters, the value in this register can sometimes be inaccurate if this register is read at the same time that the receive UART updates the receive FIFO. To manage the receive FIFO even when the receive UART is active, do not use this register to determine receive FIFO state. Use the RFIFOEmptyInt bit, the RxTrgInt bit, and the RTimeOut bit instead.

Flow Control Register (FlowCtrl)

ADDRESS:	0x13							
MODE:	R/W							
BIT	**7**	**6**	**5**	**4**	**3**	**2**	**1**	**0**
NAME	SwFlow3	SwFlow2	SwFlow1	SwFlow0	SwFlowEn	GPIAddr	AutoCTS	AutoRTS
RESET	0	0	0	0	0	0	0	0

The **FlowCtrl** register configures hardware ($\overline{RTS}$/$\overline{CTS}$) and software (XON/XOFF) flow control as well as special characters detection.

Bits 7–4: SwFlowx

The SwFlowx bits select the XON and XOFF characters used for auto software flow control and/or special character detection in combination with the characters programmed in the **XON1**, **XON2**, **XOFF2**, and/or **XOFF2** registers. See table 3.

If auto software flow control is enabled (through **FlowCtrl**[3]:SwFlowEn) and special character detection is not enabled, SwFlowx allows selecting either single or dual XON/XOFF character flow control. When double character flow control is enabled, the transmitter sends out **XON1/XOFF1** first followed by **XON2/XOFF2** during receive flow control. For transmit flow control, the receiver only recognizes the received character sequence **XON1/XOFF1** followed by **XON2/XOFF2** as a valid control sequence to resume/halt transmission.

If only special character detection is enabled (through **MODE2**[4]: SpecialChr) while auto software flow control is disabled, the SwFlowx allows selecting either single or double character detection. Single character detection allows the detection of two characters: **XON1** or **XON2** and **XOFF1** or **XOFF2**. Double character detection does not distinguish between the sequence of the two received **XON1/XON2** or **XOFF1/XOFF2** characters. The two characters have to be received in succession, but it is insignificant which of the two is received first. The special characters are deposited in the receive FIFO. An **ISR**[1]: SpCharInt interrupt is generated when special characters are received.

Auto software flow control and special character detection can be enabled to operate simultaneously. If both are enabled, **XON1** and **XOFF1** define the auto flow control characters, while **XON2** and **XOFF2** constitute the special character detection characters.

Bit 3: SwFlowEn

Set the SwFlowEn bit high to enable auto software flow control. The characters used for automatic software flow control are selected by SwFlowx. If special character detection is enabled by setting the **MODE2**[4]: SpecialChr bit high in addition to automatic software flow control, **XON1** and **XOFF1** are used for flow control while **XON2** and **XOFF2** define the special characters.

Bit 2: GPIAddr

Set the GPIAddr bit high to enable the four GPIO_ inputs to be used in conjunction with **XOFF2** for the definition of a special character. This can be used, for example, for defining the address of an RS-485 slave device through hardware. The GPIO_ input logic levels define the four LSBs of the special character, while the four MSBs are defined by the **XOFF2**[7:4] bits. The contents of the **XOFF2**[3:0] bits are neglected while the GPIO_ inputs are used in special character definition. Reading the **XOFF2** register does not reflect the logic on GPIO_ in this mode.

Bit 1: AutoCTS

Set the AutoCTS bit high to enable AutoCTS flow control mode. In this mode, the transmitter stops and starts sending data at the TX_ interface depending on the logic state of the $\overline{CTS_}$ input. See the *Auto Hardware Flow Control* section for more information about AutoCTS flow control mode. Logic changes at the $\overline{CTS_}$ input result in an interrupt in **ISR**[7]: CTSInt. The transmitter must be turned off by setting the **MODE1**[1]: TxDisabl bit high before AutoCTS mode is enabled.

Bit 0: AutoRTS

Set the AutoRTS bit high to enable AutoRTS flow control mode. In this mode, the logic state of the $\overline{RTS_}$ output is dependent on the receive FIFO fill level. The FIFO thresholds at which $\overline{RTS_}$ changes state are set in **FlowLvl**. See the *Auto Hardware Flow Control* section for more information about AutoRTS flow control mode.

Table 3. SwFlow[3:0] Truth Table

RECEIVE FLOW CONTROL		TRANSMIT FLOW CONTROL/SPECIAL CHARACTER DETECTION		DESCRIPTION
SwFlow3	SwFlow2	SwFlow1	SwFlow0	
0	0	0	0	No flow control/no special character detection.
0	0	X	X	No receive flow control.
1	0	X	X	Transmitter generates XON1, XOFF1.
0	1	X	X	Transmitter generates XON2, XOFF2.
1	1	X	X	Transmitter generates XON1, XON2, XOFF1, and XOFF2.
X	X	0	0	No transmit flow control.
X	X	1	0	Receiver compares XON1 and XOFF1 and controls the transmitter accordingly. XON1 and XOFF1 special character detection.
X	X	0	1	Receiver compares XON2 and XOFF2 and controls the transmitter accordingly. XON2 and XOFF2 special character detection.
X	X	1	1	Receiver compares XON1, XON2, XOFF1, and XOFF2 and controls the transmitter accordingly. XON1, XON2, XOFF1, and XOFF2 special character detection.

X = Don't care

XON1 Register

ADDRESS:	0x14							
MODE:	R/W							
BIT	**7**	**6**	**5**	**4**	**3**	**2**	**1**	**0**
NAME	Bit7	Bit6	Bit5	Bit4	Bit3	Bit2	Bit1	Bit0
RESET	0	0	0	0	0	0	0	0

The **XON1** and **XON2** register contents define the XON character used for automatic XON/XOFF flow control and/or the special characters used for special-character detection. See the **FlowCtrl** register description for more information.

Bits 7–0: Bitx

These bits define the **XON1** character if single character XON auto software flow control is enabled in **FlowCtrl**[7:4]. If double-character flow control is selected in **FlowCtrl**[7:4], these bits constitute the least significant byte of the 2-byte XON character. If special character detection is enabled in **MODE2**[4] and auto flow control is not enabled, these bits define a special character.

If both special character detection and auto software flow control are enabled, **XON1** defines the XON flow control character.

XON2 Register

ADDRESS:	0x15							
MODE:	R/W							
BIT	**7**	**6**	**5**	**4**	**3**	**2**	**1**	**0**
NAME	Bit7	Bit6	Bit5	Bit4	Bit3	Bit2	Bit1	Bit0
RESET	0	0	0	0	0	0	0	0

The **XON1** and **XON2** register contents define the XON character for automatic XON/XOFF flow control and/or the special characters used in special-character detection. See the **FlowCtrl** register description for more information.

Bits 7–0: Bitx

These bits define the **XON2** character if single character auto software flow control is enabled in **FlowCtrl**[7:4]. If double-character flow control is selected in **FlowCtrl**[7:4], these bits constitute the most significant byte of the 2-byte XON character. If special character detection is enabled in **MODE2**[4] and auto software flow control is not enabled, these bits define a special character.

If both special character detection and auto software flow control are enabled, **XON2** defines a special character.

XOFF1 Register

ADDRESS:	0x16							
MODE:	R/W							
BIT	**7**	**6**	**5**	**4**	**3**	**2**	**1**	**0**
NAME	Bit7	Bit6	Bit5	Bit4	Bit3	Bit2	Bit1	Bit0
RESET	0	0	0	0	0	0	0	0

The **XOFF1** and **XOFF2** register contents define the XOFF character for automatic XON/XOFF flow control and/or the special characters used in special character detection. See the **FlowCtrl** register description for more information.

Bits 7–0: Bitx

These bits define the **XOFF1** character if single character XOFF auto software flow control is enabled in **FlowCtrl**[7:4]. If double character flow control is selected in **FlowCtrl**[7:4], these bits constitute the least significant byte of the 2-byte XOFF character. If special character detection is enabled in **MODE2**[4] and auto software flow control is not enabled, these bits define a special character.

If both special character detection and auto software flow control are both enabled, **XOFF1** defines the XOFF flow control character.

XOFF2 Register

ADDRESS:	0x17							
MODE:	R/W							
BIT	**7**	**6**	**5**	**4**	**3**	**2**	**1**	**0**
NAME	Bit7	Bit6	Bit5	Bit4	Bit3	Bit2	Bit1	Bit0
RESET	0	0	0	0	0	0	0	0

The **XOFF1** and **XOFF2** register contents define the XOFF character for automatic XON/XOFF flow control and/or the special characters used in special character detection. See the **FlowCtrl** register description for more information.

Bits 7–0: Bitx

These bits define the **XOFF1** character if single character XOFF auto software flow control is enabled in **FlowCtrl**[7:4]. If double character flow control is selected in **FlowCtrl**[7:4], these bits constitute the least significant byte of the 2-byte XOFF character. If special character detection is enabled in **MODE2**[4] and auto software flow control is not enabled, these bits define a special character.

If both special character detection and auto software flow control are both enabled, **XOFF2** defines a special character.

GPIO Configuration Register (GPIOConfg)

ADDRESS:	0x18							
MODE:	R/W							
BIT	**7**	**6**	**5**	**4**	**3**	**2**	**1**	**0**
NAME	GP3OD	GP2OD	GP1OD	GP0OD	GP3Out	GP2Out	GP1Out	GP0Out
RESET	0	0	0	0	0	0	0	0

Each UART has four GPIOs that can be configured as inputs or outputs and can be operated in push-pull or open-drain mode. The reference clock needs to be active for the GPIOs to work.

Each UART has four individually assigned GPIO outputs as follows: UART0: GPIO0–GPIO3, UART1: GPIO4–GPIO7.

Bits 7–4: GPxOD

Set the GPxOD bits high to configure the associated GPIOs as open-drain outputs. Set the GPxOD bits low to configure the associated GPIOs as push-pull outputs. For example, for UART1: GP0OD configures GPIO4, GP1OD configures GPIO5, GP2OD configures GPIO6 and GP3OD configures GPIO7.

The GPIxDat bits reflect the input logic on the associated GPIO_s. For example, for UART1: GP0Dat configures GPIO4, GP1Dat configures GPIO5, GP2Dat configures GPIO6 and GP3Dat configures GPIO7.

Bits 3–0: GPxOut

The GPxOut bits configure the associated GPIO_s to be either inputs or outputs. Set the GPxOut bits high to configure the associated GPIO_s as outputs. Set the GPxOut bits low to configure the associated GPIO_s as inputs. For example, for UART1: GP0Out configures GPIO4, GP1Out configures GPIO5, GP2Out configures GPIO6 and GP3Out configures GPIO7.

GPIO Data Register (GPIOData)

ADDRESS:	0x19							
MODE:	R/W							
BIT	**7**	**6**	**5**	**4**	**3**	**2**	**1**	**0**
NAME	GPI3Dat	GPI2Dat	GPI1Dat	GPI0Dat	GPO3Dat	GPO2Dat	GPO1Dat	GPO0Dat
RESET	0	0	0	0	0	0	0	0

Each UART has four individually assigned GPIO outputs as follows: UART0: GPIO0–GPIO3, UART1: GPIO4–GPIO7.

Bits 7–4: GPIxDat

The GPIxDat bits reflect the input logic on the associated GPIO_s. For example, for UART1: GP0Dat configures GPIO4, GP1Dat configures GPIO5, GP2Dat configures GPIO6 and GP3Dat configures GPIO7. When configured as inputs in GPxOut, the GPIO_s are high-impedance inputs with weak pulldown resistors, regardless of the state of GPxOD.

Bits 3–0: GPOxDat

The GPOxDat bits allow programming of the logic state of the GPIO_s when configured as outputs in **GPIOConfg**[3:0]. For open-drain operation, pullup resistors are needed on the GPIOs. For example, for UART1: GP0Dat configures GPIO4, GP1Dat configures GPIO5, GP2Dat configures GPIO6 and GP3Dat configures GPIO7.

PLL Configuration Register (PLLConfig)

ADDRESS:	0x1A							
MODE:	R/W							
BIT	**7**	**6**	**5**	**4**	**3**	**2**	**1**	**0**
NAME	PLLFactor1	PLLFactor0	PreDiv5	PreDiv4	PreDiv3	PreDiv2	PreDiv1	PreDiv0
RESET	0	0	0	0	0	0	0	1

Bits 7–6: PLLFactorx

The PLLFactorx bits allow programming the PLL multiplication factor. The input and output frequencies of the PLL must be limited to the ranges shown in Table 4. Enable the PLL in **CLKSource**[2].

Bits 5–0: PreDivx

The PreDivx bits allow programming of the divisor in the PLL's predivider. The divisor must be chosen such that the output frequency of the predivider, which is the PLL's input frequency, is limited to the ranges shown in Table 4. The PLL input frequency is calculated as:

$$f_{PLLIN} = f_{CLK}/PreDiv$$

where f_{CLK} is the input frequency of the crystal oscillator or external clock source (Figure 17), and PreDiv is an integer in the range of 1 to 63.

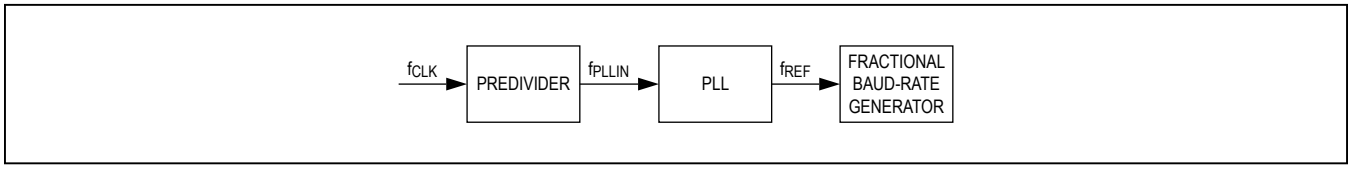

Figure 17. PLL Signal Path

Table 4. PLLFactorx Selection Guide

PLLFactor1	PLLFactor0	MULTIPLICATION FACTOR	f_{PLLIN}		f_{REF}	
			MIN (kHz)	MAX	MIN (MHz)	MAX (MHz)
0	0	6	500	800kHz	3	4.8
0	1	48	850	1.2MHz	40.8	56
1	0	96	425	1MHz	40.8	96
1	1	144	390	667kHz	56	96

Baud-Rate Generator Configuration Register (BRGConfig)

ADDRESS:	0x1B							
MODE:	R/W							
BIT	**7**	**6**	**5**	**4**	**3**	**2**	**1**	**0**
NAME	—	—	4xMode	2xMode	FRACT3	FRACT2	FRACT1	FRACT0
RESET	0	0	0	0	0	0	0	0

Bits 7 and 6: No Function

Bit 5: 4xMode

Set the 4xMode bit high to quadruple the regular (16x sampling) baud rate. Set the 2xMode bit low when 4xMode is enabled. See the *2x* and *4x Rate Modes* section for more information.

Bit 4: 2xMode

Set the 2xMode bit high to double the regular (16x sampling) baud rate. Set the 4xMode bit low when 2xMode is enabled. See the 2x and 4x Rate Modes section for more information.

Bits 3–0: FRACTx

The FRACTx bits are the fractional portion of the baud-rate generator divisor. Set FRACTx to 0000b if not used. See the *Fractional Baud-Rate Generator* section for calculations of how to set this value to select the baud rate.

Baud-Rate Generator LSB Divisor Register (DIVLSB)

ADDRESS:	0x1C							
MODE:	R/W							
BIT	**7**	**6**	**5**	**4**	**3**	**2**	**1**	**0**
NAME	Div7	Div6	Div5	Div4	Div3	Div2	Div1	Div0
RESET	0	0	0	0	0	0	0	1

DIVLSB and **DIVMSB** define the baud-rate generator integer divisor. The minimum value for **DIVLSB** is 1. See the *Fractional Baud-Rate Generator* section for more information.

Bits 7–0: Divx

The Divx bits are the eight LSBs of the integer divisor portion (DIV) of the baud-rate generator.

Baud-Rate Generator MSB Divisor Register (DIVMSB)

ADDRESS:	0x1D							
MODE:	R/W							
BIT	**7**	**6**	**5**	**4**	**3**	**2**	**1**	**0**
NAME	Div15	Div14	Div13	Div12	Div11	Div10	Div9	Div8
RESET	0	0	0	0	0	0	0	0

DIVLSB and **DIVMSB** define the baud-rate generator integer divisor. The minimum value for **DIVLSB** is 1. See the *Fractional Baud-Rate Generator* section for more information.

Bits 7–0: Divx

The Divx bits are the eight MSBs of the integer divisor portion (DIV) of the baud-rate generator.

Clock Source Register (CLKSource)

ADDRESS:	0x1E							
MODE:	R/W							
BIT	**7**	**6**	**5**	**4**	**3**	**2**	**1**	**0**
NAME	CLKtoRTS	—	—	—	PLLBypass	PLLEn	CrystalEn	—
RESET	0	0	0	1	1	0	0	0

Bit 7: CLKtoRTS

Set the CLKtoRTS bit high to route the baud-rate generator (16x baud rate) output clock to $\overline{\text{RTS_}}$. The $\overline{\text{RTS_}}$ clock frequency is a factor of 16x, 8x, or 4x of the baud rate in 1x, 2x, and 4x rate modes, respectively.

Bits 6, 5, 4, and 0: No Function

Bit 3: PLLBypass

Set the PLLBypass bit high to bypass the internal PLL and predivider.

Bit 2: PLLEn

Set the PLLEn bit high to enable the internal PLL. Set PLLEn low to disable the internal PLL.

Bit 1: CrystalEn

Set the CrystalEn bit high to enable the crystal oscillator. When using an external clock source at XIN, set CrystalEn low.

Global IRQ Register (GlobalIRQ)

ADDRESS:	0x1F							
MODE:	R							
BIT	**7**	**6**	**5**	**4**	**3**	**2**	**1**	**0**
NAME	—	—	—	—	—	—	IRQ1	IRQ0
RESET	0	0	0	0	0	0	1	1

Bit 7–2: No Function

Bits 1-0: $\overline{\text{IRQx}}$

The MAX3109 has a single $\overline{\text{IRQ}}$ output. The **GlobalIRQ** register bits report which of the UARTs have an interrupt pending, as enabled in the **ISRIntEn** registers.

The **GlobalIRQ** register can be read in two ways: either by reading register 0x1F of any of the two UARTs or by sampling the two bits sent to the master on MISO during the command byte of a read cycle (full-duplex SPI) (see the *Fast Read Cycle* section for more information).

The $\overline{\text{IRQx}}$ bits are set low when the associated UARTs have an $\overline{\text{IRQ}}$ interrupt pending. The $\overline{\text{IRQx}}$ bits are cleared high when the associated UART interrupt is cleared. UART interrupts are cleared by reading the UART **ISR** register.

Global Command Register (GlobIComnd)

ADDRESS:	0x1F							
MODE:	W							
BIT	**7**	**6**	**5**	**4**	**3**	**2**	**1**	**0**
NAME	GlbCom7	GlbCom6	GlbCom5	GlbCom4	GlbCom3	GlbCom2	GlbCom1	GlbCom0

Bits 7–0: GlbComx

The **GlobIComnd** register is the only global write register in the MAX3109. Every byte written to **GlobIComnd** is sent simultaneously to both UARTs. Every byte sent by the SPI/I^{2}C master to register 0x1F is interpreted as a global command by both internal UARTs, regardless of which UART it was written to.

The MAX3109 logic supports the following commands (Table 5):

- Global Tx Synchronization
- Extended Addressing Space Enable (to enable access to registers beyond address 0x1F)
- Extended Addressing Space Disable (to disable access to registers beyond address 0x1F)

The last two commands (0xCE/0xCD) enable or disable access to registers in the extended space of the register map when the MAX3109 operates in SPI mode. The SPI command byte has only 5 bits to address a given register so that the registers beyond 0x1F could not be addressed using the standard access method. In I^{2}C mode, there is no need to explicitly enable and disable the extended register map access as I^{2}C allows up to 7 bits for register addressing. To extend the addressing capability of the SPI command byte, send a 0xCE to location 0x1F. The internal SPI address in extended access mode is generated as 0010 A3A2A1A0, where A3A2A1A0 is the least significant nibble of the command byte. Bit A4 of the command byte is disregarded when the extended space of the register map is enabled and only the least significant nibble is used for addressing purposes (Table 6).

The U bit of the command byte maintains its meaning in the extended mode. See the *SPI Interface* section for more information. To return to standard addressing mode, the SPI master sends the 0xCD command to register 0x1F. In this case, the internal SPI address will be generated as follows (default): 000A4 A3A2A1A0.

Table 5. GlobIComnd Command Descriptions

GlobIComndx	COMMAND DESCRIPTION
0xE0	Tx Command 0
0xE1	Tx Command 1
0xE2	Tx Command 2
0xE3	Tx Command 3
0xE4	Tx Command 4
0xE5	Tx Command 5
0xE6	Tx Command 6
0xE7	Tx Command 7
0xE8	Tx Command 8
0xE9	Tx Command 9
0xEA	Tx Command 10
0xEB	Tx Command 11
0xEC	Tx Command 12
0xED	Tx Command 13
0xEE	Tx Command 14
0xEF	Tx Command 15
0xCE	Enable extended register map access
0xCD	Disable extended register map access

Table 6. Extended Mode Addressing (SPI Only)

REGISTER	SPI MODE ADDRESS	I^{2}C MODE ADDRESS
TxSynch	0x00	0x20
SynchDelay1	0x01	0x21
SynchDelay2	0x02	0x22
TIMER1	0x03	0x23
TIMER2	0x04	0x24
RevID	0x05	0x25

Transmitter Synchronization Register (TxSynch)

ADDRESS:	0x20							
MODE:	R/W							
BIT	**7**	**6**	**5**	**4**	**3**	**2**	**1**	**0**
NAME	CLKtoGPIO	TxAutoDis	TrigDelay	SynchEn	TrigSel3	TrigSel2	TrigSel1	TrigSel0
RESET	0	0	0	0	0	0	0	0

The **TxSynch** register is used to configure transmitter synchronization with a global SPI or I^{2}C command. One of 16 trigger commands (Table 5) can be selected to be the synchronization trigger source individually for each UART. This allows simultaneous start of transmission of multiple UARTs that are associated with the same global trigger command. The synchronized UARTs can be on either a single MAX3109 or multiple devices if they are controlled by a common SPI interface.

The UARTs start transmission when a global trigger command is received. Start of transmission is considered to be the falling edge of the START bit at the TX_ output. A delay can optionally be programmed through the **SynchDelay1** and **SynchDelay2** registers.

TX synchronization is managed through software by transmitting the broadcast trigger Tx command (Table 5) to the MAX3109 through the SPI or I^{2}C interface. To selectively synchronize ports that are on the same MAX3109 (intrachip synchronization) or on different MAX3109 (interchip synchronization) devices, up to 16 trigger Tx commands have been defined (see the *Global Command Register (GloblComnd)* section for more information).

Bit 7: CLKtoGPIO

The CLKtoGPIO bit is used to provide a buffered replica of the UARTs system clock (i.e., the fractional baud-rate generator input) to a GPIO. UART0's clock is routed to GPIO0 and UART1's clock is routed to GPIO4.

Bit 6: TxAutoDis

Set the TxAutoDis bit high to enable automatic transmitter disabling. When TxAutoDis is set high, the transmitter is automatically disabled when all data in the TxFIFO has been transmitted. After the transmitter is disabled, the TxFIFO can then be filled with data that will be transmitted when its assigned trigger command is received, as defined by the TrigSelx bits.

Bit 5: TrigDelay

Set the TrigDelay bit high to enable delayed start of transmission when a trigger command is received. The UART starts transmitting data following a delay programmed in **SynchDelay1** and **SynchDelay2** after receiving the assigned trigger command.

Bit 4: SynchEn

Set the SynchEn bit high to enable software TX synchronization mode. If SynchEn is set high, the UART starts transmitting data when the assigned trigger command is received and the TxFIFO contains data. Setting SynchEn high forces the **MODE1**[1]: TxDisabl bit high and thereby disables the UART's transmitter. This prevents the transmitter from sending data as soon as the TxFIFO is loaded. Once the TxFIFO has been loaded, the UART starts transmitting data only upon receiving the assigned trigger command.

Set the SynchEn bit low to disable transmitter synchronization for that UART. If SynchEn is set low, that UART's transmitter does not start transmission through any trigger command.

Bits 3–0: TrigSelx

The TrigSelx bits assign the trigger command for that UART's transmitter synchronization when SynchEn is set high. For example, set **TxSynch**[3:0] to 0x08 for the UART to be triggered by TX command 8 (0xE8, Table 5).

Synchronization Delay Register 1 (SynchDelay1)

ADDRESS:	0x21							
MODE:	R/W							
BIT	**7**	**6**	**5**	**4**	**3**	**2**	**1**	**0**
NAME	SDelay7	SDelay6	SDelay5	SDelay4	SDelay3	SDelay2	SDelay1	SDelay0
RESET	0	0	0	0	0	0	0	0

The **SynchDelay1** and **SynchDelay2** register contents define the time delay between when the UART receives an assigned transmitter trigger command and when the UART begins transmission.

Bits 7–0: SDelayx

The SDelayx bits are the 8 LSBs of the delay between when the UART receives an assigned transmitter trigger command and when the UART begins transmission. The delay is expressed in number of UART bit intervals (1/BaudRate). The maximum delay is 65,535 bit intervals.

For example, given a baud rate of 230.4kbps, the bit time is 4.34Fs, so the maximum delay is 284ms.

Synchronization Delay Register 2 (SynchDelay2)

ADDRESS:	0x22							
MODE:	R/W							
BIT	**7**	**6**	**5**	**4**	**3**	**2**	**1**	**0**
NAME	SDelay15	SDelay14	SDelay13	SDelay12	SDelay11	SDelay10	SDelay9	SDelay8
RESET	0	0	0	0	0	0	0	0

The **SynchDelay1** and **SynchDelay2** register contents define the time delay between when the UART receives an assigned transmitter trigger command and when the UART begins transmission.

Bits 7–0: SDelayx

The SDelayx bits are the 8 MSBs of the delay between when the UART receives an assigned transmitter trigger command and when the UART begins transmission. The delay is expressed in number of UART bit intervals (1/BaudRate). The maximum delay is 65,535 bit intervals.

For example, given a baud rate of 230.4kbps, the bit time is 4.34Fs, so the maximum delay is 284ms.

Timer Register 1 (TIMER1)

ADDRESS:	0x23							
MODE:	R/W							
BIT	**7**	**6**	**5**	**4**	**3**	**2**	**1**	**0**
NAME	Timer7	Timer6	Timer5	Timer4	Timer3	Timer2	Timer1	Timer0
RESET	0	0	0	0	0	0	0	0

The **TIMER1** and **TIMER2** register contents can be used to generate a low-frequency clock signal on a GPIO_ output. The low-frequency clock is a divided replica of the fractional baud-rate generator output. If **TIMER1** and **TIMER2** are both 0x00, the low-frequency clock is off.

Bits 7–0: Timerx

The **TIMER1**[7:0] bits are the 8 LSBs of the 15-bit timer divisor. See the **TIMER2** register description.

Timer Register 2 (TIMER2)

ADDRESS:	0x24							
MODE:	R/W							
BIT	**7**	**6**	**5**	**4**	**3**	**2**	**1**	**0**
NAME	TmrToGPIO	Timer14	Timer13	Timer12	Timer11	Timer10	Timer9	Timer8
RESET	0	0	0	0	0	0	0	0

The **TIMER1** and **TIMER2** register contents can be used to generate a low-frequency clock signal on a GPIO_ output. The low-frequency clock is a divided replica of the fractional baud-rate generator output. If **TIMER1** and **TIMER2** are both 0x00, the low-frequency clock is off.

Bit 7: TmrToGPIO

Set the TmrToGPIO bit high to enable clock generation at a GPIO output. The clock signal is routed to GPIO1 for UART0 and GPIO5 for UART1. The output clock has a 50% duty cycle.

Bits 6–0: Timerx

The **TIMER2**[6:0] bits are the 7 MSBs of the 15-bit timer divisor. The clock frequency is calculated using the following formula:

$$f_{TIMER_CLK} = UARTClk/(1024 \times Timerx)$$

where UARTClk is the fractional baud-rate generator output (i.e., 16 x Baud Rate).

Revision Identification Register (RevID)

ADDRESS:	0x25							
MODE:	R							
BIT	**7**	**6**	**5**	**4**	**3**	**2**	**1**	**0**
NAME	Bit7	Bit6	Bit5	Bit4	Bit3	Bit2	Bit1	Bit0
RESET	1	1	0	0	0	0	1	0

Bits 7–0: Bitx

The **RevID** register indicates the revision number of the MAX3109 silicon starting with 0xC0. This can be used during software development as a known reference.

Serial Controller Interface

The MAX3109 can be controlled through I²C or SPI as defined by the logic on SPI/$\overline{\text{I2C}}$. See the *Pin Description* for further details.

SPI Interface

The SPI supports both single-cycle and burst read/write access. The SPI master must generate clock and data signals in SPI MODE0 (i.e., with clock polarity CPOL = 0 and clock phase CPHA = 0).

Each of the two UARTs is addressed using 1 bit (U) in the command byte (Table 7).

To access the registers with addresses 0x20 or higher in SPI mode, enable extended register map access. See the **GlobICmnd** register description for more information.

SPI Single-Cycle Access

Before a specific UART has been addressed, both UARTs could attempt to drive MISO. To avoid this contention, the MISO line is held in high impedance during a write cycle (Figure 18).

During a read cycle, MISO is high impedance for the first four clock cycles of the command byte. Once the SPI address has been properly decoded, the addressed SPI drives the MISO line (Figure 19).

Table 7. SPI Command Byte Configuration

SPI COMMAND BYTE							
BIT 7	**BIT 6**	**BIT 5**	**BIT 4**	**BIT 3**	**BIT 2**	**BIT 1**	**BIT 0**
W/$\overline{\text{R}}$	0	U	A4	A3	A2	A1	A0

Ax = Register address.

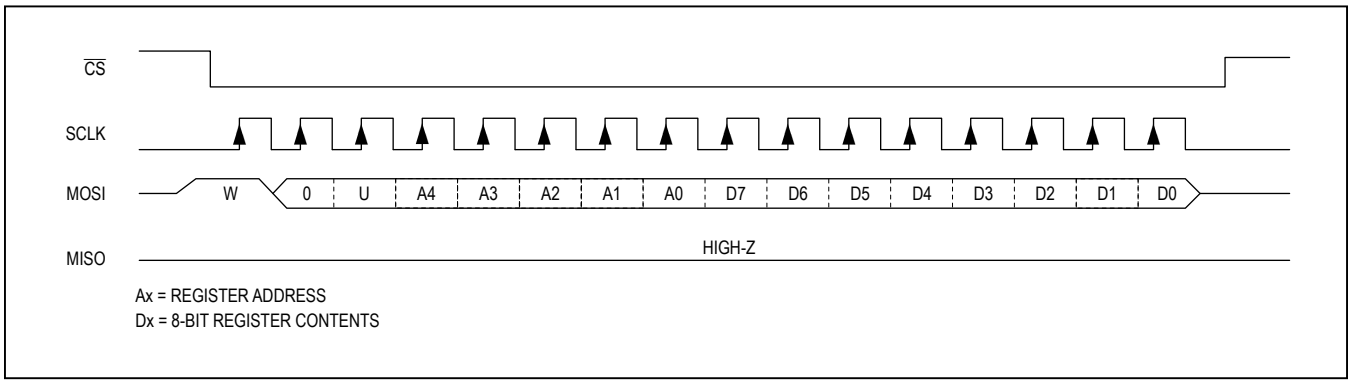

Figure 18. SPI Write Cycle

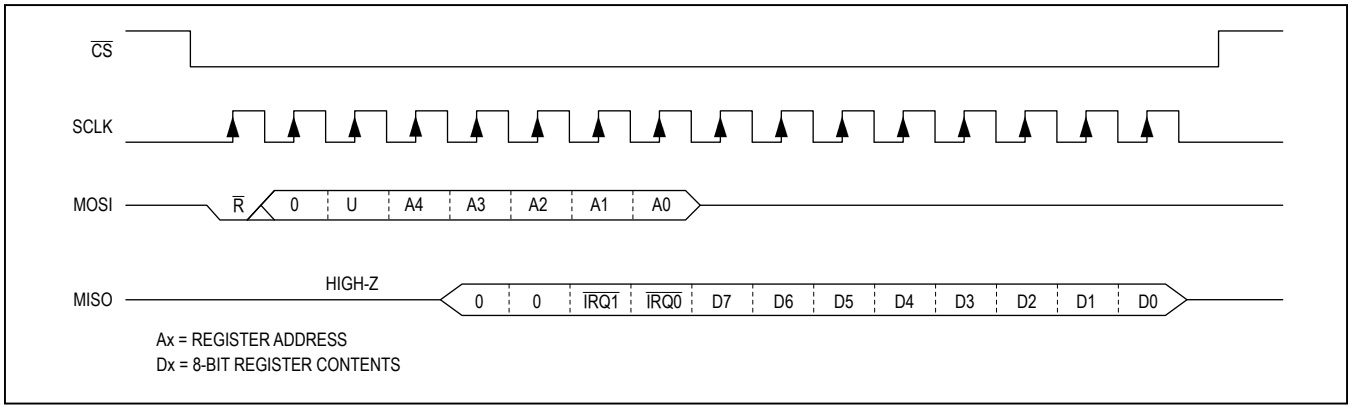

Figure 19. SPI Ready Cycle

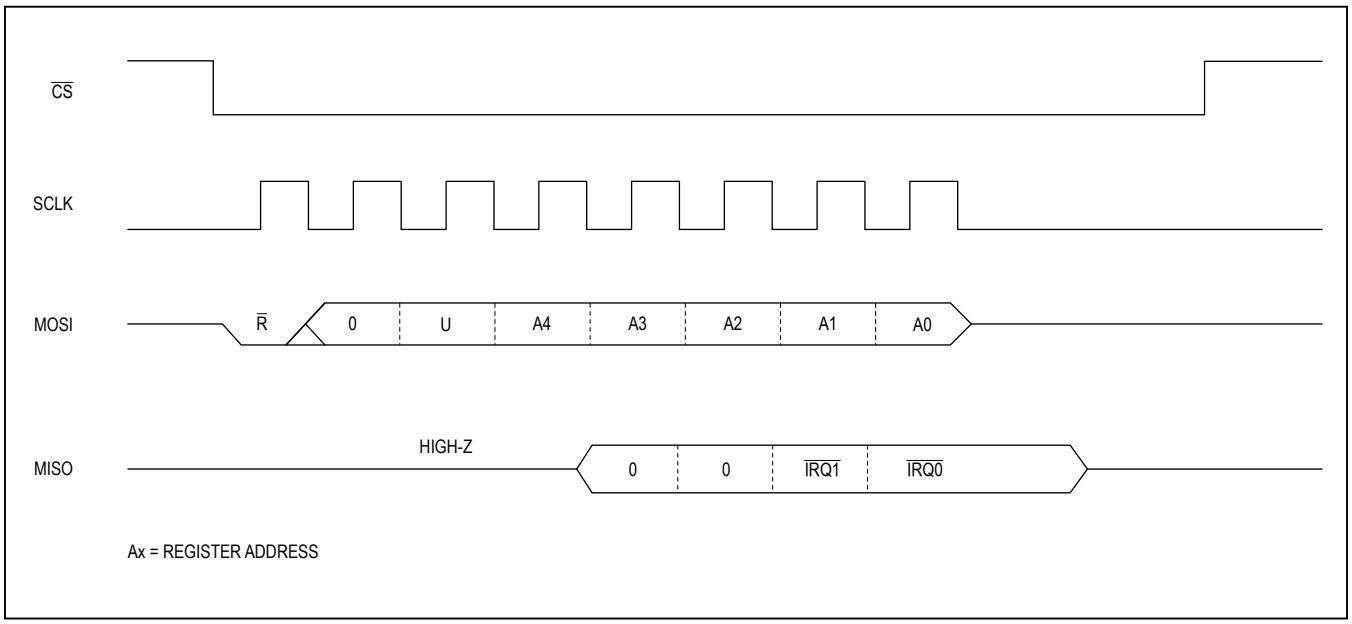

Figure 20. SPI Fast Read Cycle

SPI Burst Access

Burst access allows writing and reading multiple data bytes in one block by defining only the initial register address in the SPI command byte. Multiple characters can be loaded into the TxFIFO by using the THR (0x00) as the initial burst write address. Similarly, multiple characters can be read out of the RxFIFO by using the RHR (0x00) as the SPI's burst read address. If the SPI burst address is different from 0x00, the MAX3109 automatically increments the register address after each SPI data byte. Efficient programming of multiple consecutive registers is thus possible. The chip-select input, $\overline{CS}$/A0, must be held low during the whole cycle. The SCLK/SCL clock continues clocking throughout the burst access cycle. The burst cycle ends when the SPI master pulls $\overline{CS}$/A0 high.

For example, writing 128 bytes into the TxFIFO can be achieved by a burst write access using the following sequence:

1) Pull $\overline{CS}$/A0 low.
2) Send SPI write command to address 0x00.
3) Send 128 bytes.
4) Release $\overline{CS}$/A0.

This takes a total of (1 + 128) x 8 clock cycles.

Fast Read Cycle

The two UART interrupts on the MAX3109 share the single $\overline{IRQ}$ output. When operating in interrupt-based mode, the microcontroller needs to locate the source of the interrupt (i.e., which of the UARTs generated the interrupt) and clear the interrupt.

In order to locate the source of an interrupt more quickly, the MAX3109 implements the SPI fast read cycle. This means that the microcontroller can determine which UART is the source of the interrupt (UART0 or UART1) using only 8 clock cycles (Figure 20). The U bit is ignored during the fast read cycle.

I²C Interface

The MAX3109 contains an I²C-compatible interface for data communication with a host processor (SCL and SDA). The interface supports a clock frequency of up to 1MHz. SCL and SDA require pullup resistors that are connected to a positive supply.

START, STOP, and Repeated START Conditions

When writing to the MAX3109 using I²C, the master sends a START condition (S) followed by the MAX3109 I²C address. After the address, the master sends the register address of the register that is to be programmed. The master then ends communication by issuing a STOP condition (P) to relinquish control of the bus, or a repeated START

condition (Sr) to communicate to another I²C slave. See Figure 21.

Slave Address

The MAX3109 includes a configurable 7-bit I²C slave address, allowing up to 16 MAX3109 devices to share the same I²C bus. The address is defined by connecting the MOSI/A1 and $\overline{CS}$/A0 inputs to DGND, V_L, SCL, or SDA (Table 5). Set the R/$\overline{W}$ bit high to configure the MAX3109 to read mode. Set the R/$\overline{W}$ bit low to configure the MAX3109 to write mode. The address is the first byte of information sent to the MAX3109 after the START condition.

Bit Transfer

One data bit is transferred on the rising edge of each SCL clock cycle. The data on SDA must remain stable during the high period of the SCL clock pulse. Changes in SDA while SCL is high and stable are considered control signals (see the *START*, *STOP*, *and Repeated START Conditions* section). Both SDA and SCL remain high when the bus is not active.

Table 8. I²C Address Map

MOSI/A1	$\overline{CS}$/A0	UART0		UART1	
		WRITE	READ	WRITE	READ
DGND	DGND	0xD8	0xD9	0xB8	0xB9
DGND	V_L	0xC2	0xC3	0xA2	0xA3
DGND	SCL	0xC4	0xC5	0xA4	0xA5
DGND	SDA	0xC6	0xC7	0xA6	0xA7
V_L	DGND	0xC8	0xC9	0xA8	0xA9
V_L	V_L	0xCA	0xCB	0xAA	0xAB
V_L	SCL	0xCC	0xCD	0xAC	0xAD
V_L	SDA	0xCE	0xCF	0xAE	0xAF
SCL	DGND	0xD0	0xD1	0xB0	0xB1
SCL	V_L	0xD2	0xD3	0xB2	0xB3
SCL	SCL	0xD4	0xD5	0xB4	0xB5
SCL	SDA	0xD6	0xD7	0xB6	0xB7
SDA	DGND	0xC0	0xC1	0xA0	0xA1
SDA	V_L	0xDA	0xDB	0xBA	0xBB
SDA	SCL	0xDC	0xDD	0xBC	0xBD
SDA	SDA	0xDE	0xDF	0xBE	0xBF

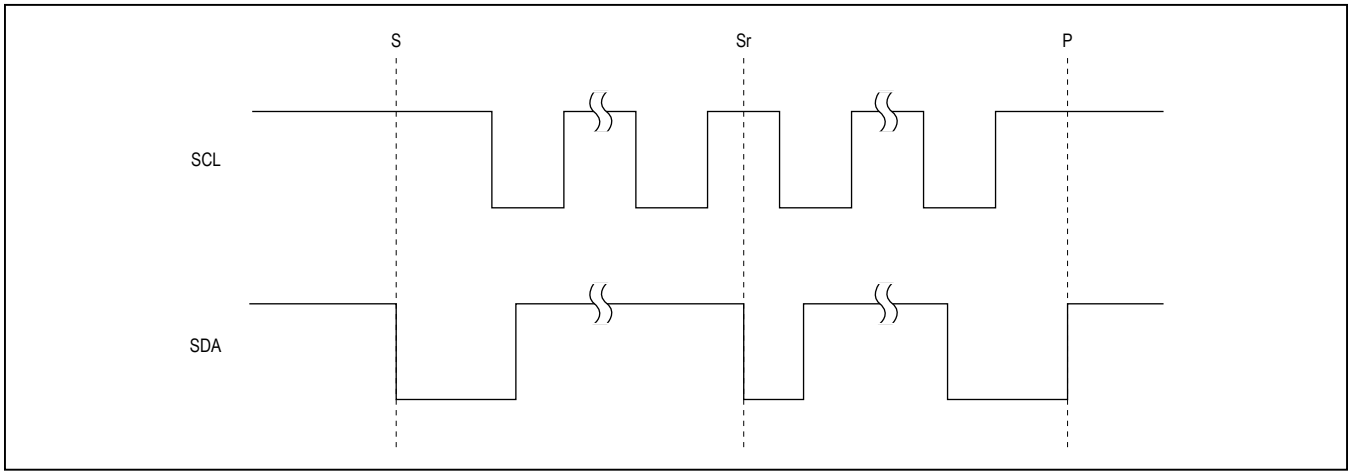

Figure 21. I²C START, STOP, and Repeated START Conditions

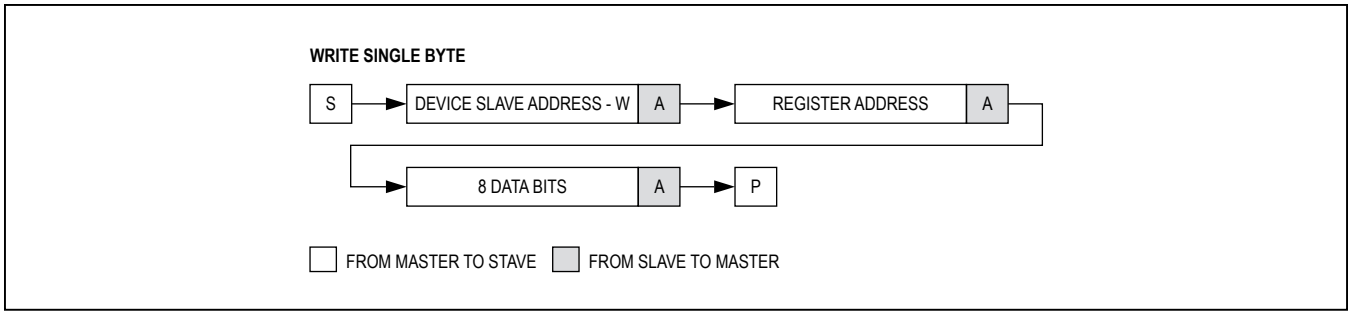

Figure 22. Write Byte Sequence

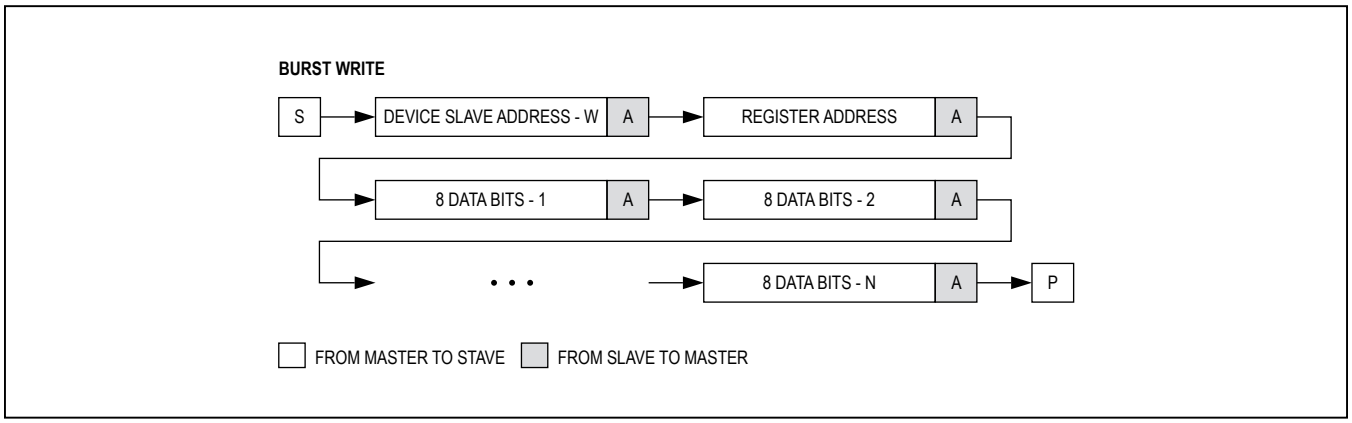

Figure 23. Burst Write Sequence

Single-Byte Write

In this operation, the master sends an address and two data bytes to the slave device (Figure 22). The following procedure describes the single-byte write operation:

1) The master sends a START condition.
2) The master sends the 7-bit slave address plus a write bit (low).
3) The addressed slave asserts an ACK on the data line.
4) The master sends the 8-bit register address.
5) The slave asserts an ACK on the data line only if the address is valid (NACK if not).
6) The master sends 8 data bits.
7) The slave asserts an ACK on the data line.
8) The master generates a STOP condition.

Burst Write

In this operation, the master sends an address and multiple data bytes to the slave device (Figure 23). The slave device automatically increments the register address after each data byte is sent, unless the register being accessed is 0x00, in which case the register address remains the same. The following procedure describes the burst write operation:

1) The master sends a START condition.
2) The master sends the 7-bit slave address plus a write bit (low).
3) The addressed slave asserts an ACK on the data line.
4) The master sends the 8-bit register address.
5) The slave asserts an ACK on the data line only if the address is valid (NACK if not).
6) The master sends 8 data bits.
7) The slave asserts an ACK on the data line.
8) Repeat 6 and 7 N-1 times.
9) The master generates a STOP condition.

Single-Byte Read

In this operation, the master sends an address plus two data bytes and receives one data byte from the slave device (Figure 24). The following procedure describes the single-byte read operation:

1) The master sends a START condition.
2) The master sends the 7-bit slave address plus a write bit (low).
3) The addressed slave asserts an ACK on the data line.
4) The master sends the 8-bit register address.
5) The active slave asserts an ACK on the data line only if the address is valid (NACK if not).
6) The master sends a repeated START condition.
7) The master sends the 7-bit slave address plus a read bit (high).
8) The addressed slave asserts an ACK on the data line.
9) The slave sends 8 data bits.
10) The master asserts a NACK on the data line.
11) The master generates a STOP condition.

Burst Read

In this operation, the master sends an address plus two data bytes and receives multiple data bytes from the slave device (Figure 25). The following procedure describes the burst byte read operation:

1) The master sends a START condition.
2) The master sends the 7-bit slave address plus a write bit (low).
3) The addressed slave asserts an ACK on the data line.
4) The master sends the 8-bit register address.
5) The slave asserts an ACK on the data line only if the address is valid (NACK if not).
6) The master sends a repeated START condition.
7) The master sends the 7-bit slave address plus a read bit (high).

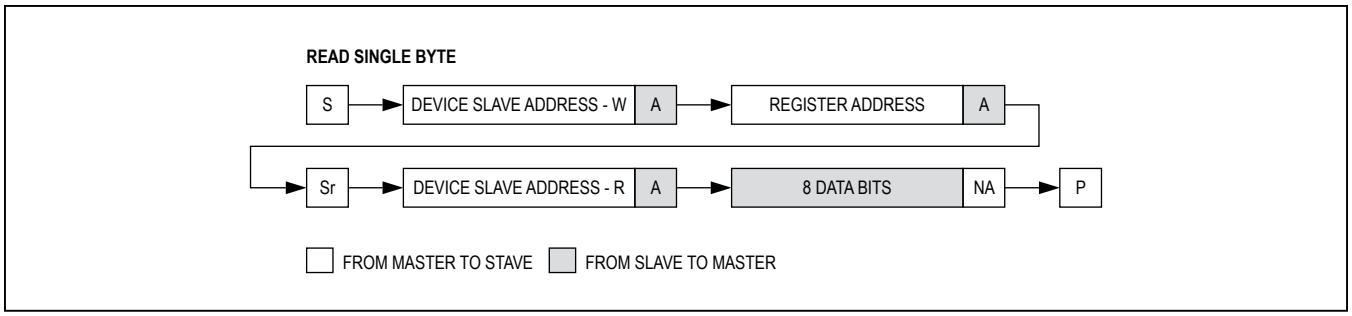

Figure 24. Read Byte Sequence

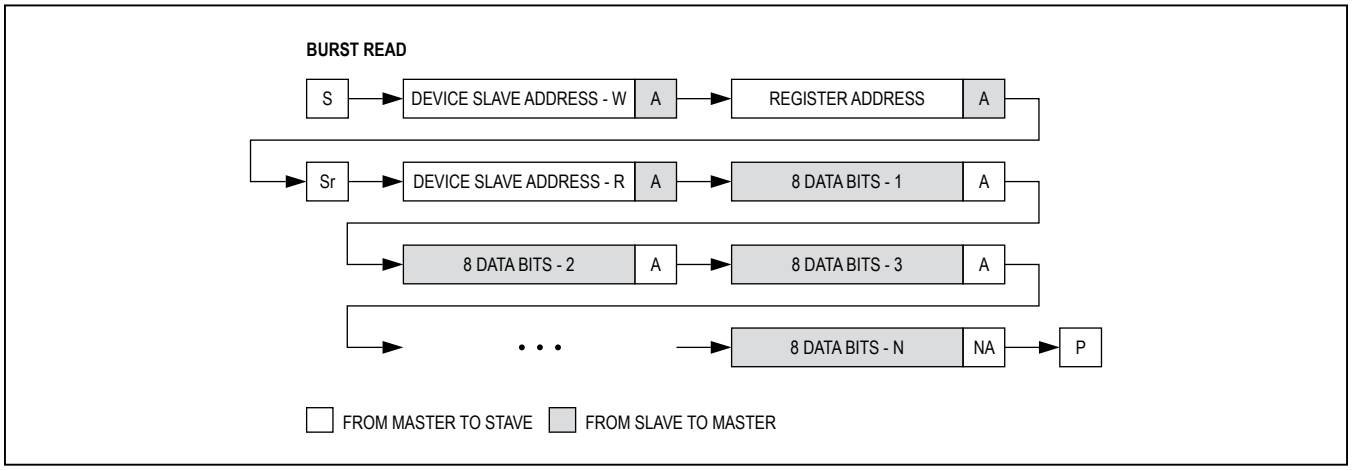

Figure 25. Burst Read Sequence

8) The slave asserts an ACK on the data line.
9) The slave sends 8 data bits.
10) The master asserts an ACK on the data line.
11) Repeat 9 and 10 N-2 times.
12) The slave sends the last 8 data bits.
13) The master asserts a NACK on the data line.
14) The master generates a STOP condition.

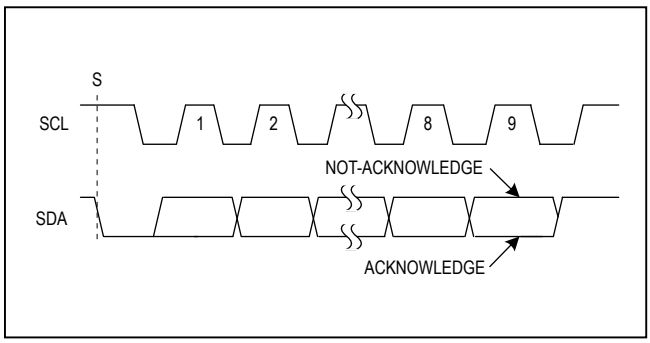

Figure 26. Acknowledge

Acknowledge Bits

Data transfers are acknowledged with an acknowledge bit (ACK) or a not-acknowledge bit (NACK). Both the master and the MAX3109 generate ACK bits. To generate an ACK, pull SDA low before the rising edge of the ninth clock pulse and hold it low during the high period of the ninth clock pulse (Figure 26). To generate a NACK, leave SDA high before the rising edge of the ninth clock pulse and leave it high for the duration of the ninth clock pulse. Monitoring for NACK bits allows for detection of unsuccessful data transfers.

Applications Information

Startup and Initialization

The MAX3109 can be initialized following power-up, a hardware reset, or a software reset as shown in Figure 27. To verify that the MAX3109 is ready for operation after a power-up or reset.

Repeatedly read a known register until the expected contents are returned. The MAX3109 is ready for operation after approximately 200µs.

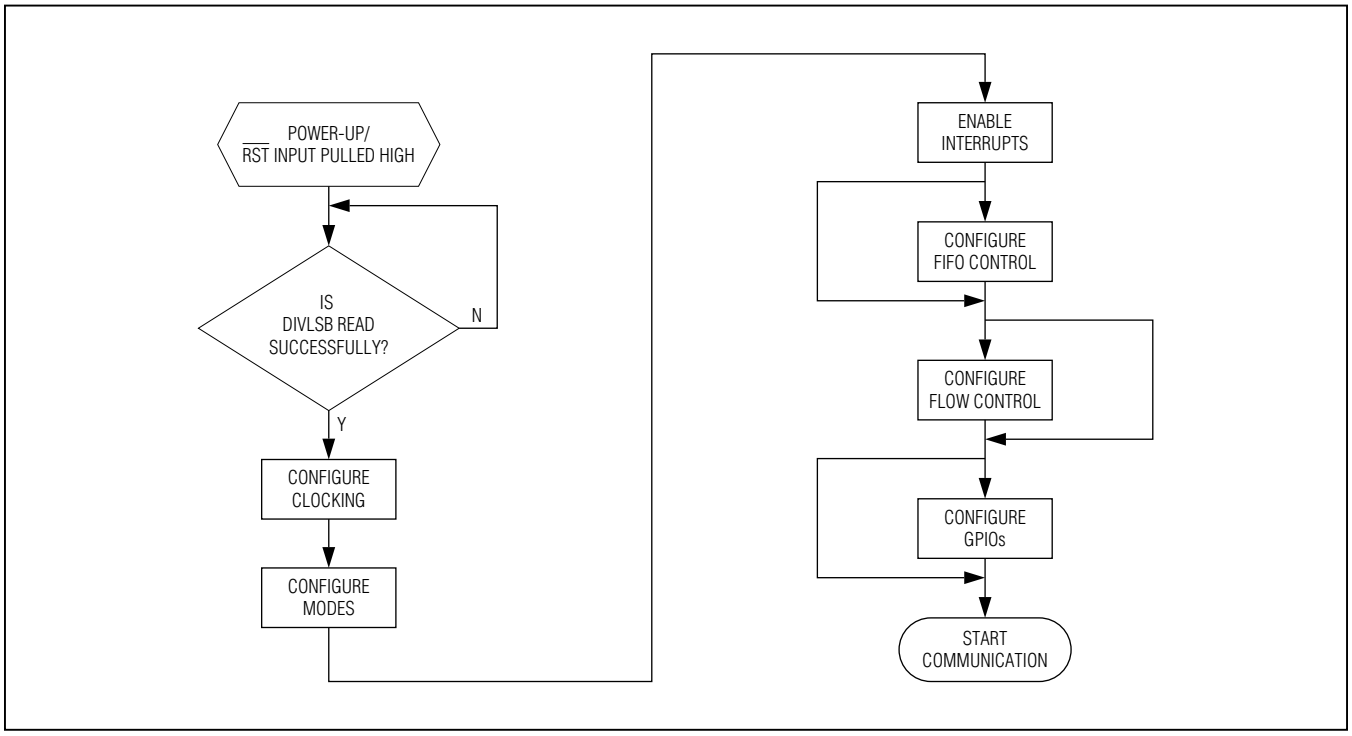

Figure 27. Startup and Initialization Flowchart

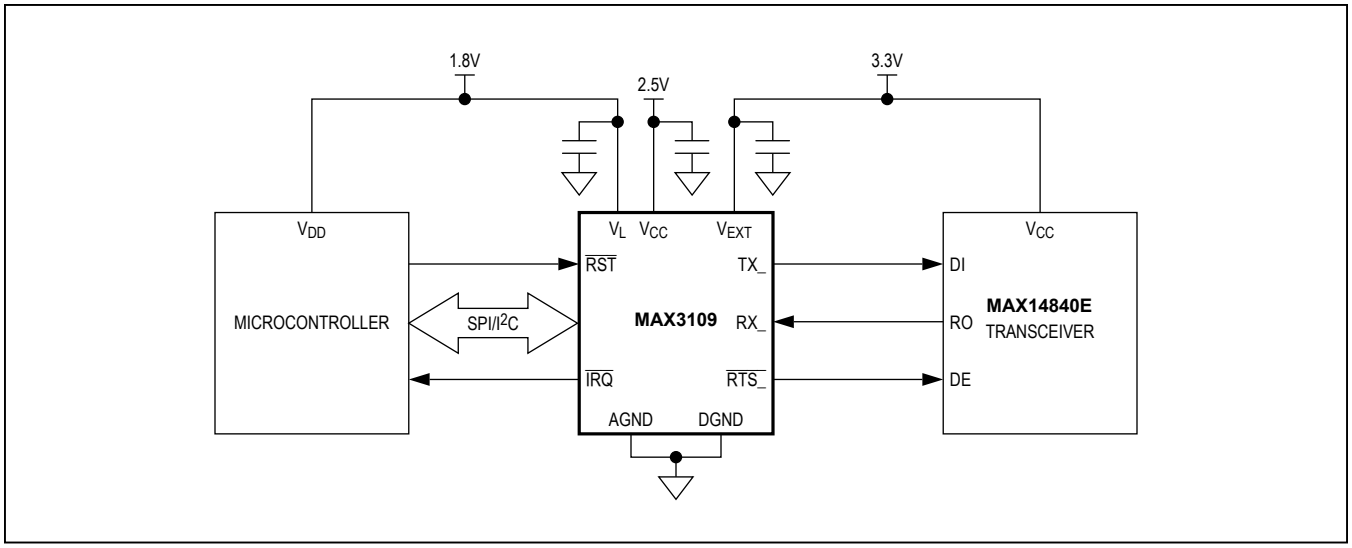

Figure 28. Logic-Level Translation

Low-Power Operation

To reduce the power consumption during normal operation, the following techniques can be adopted:

- Do not use the internal PLL. This saves the most power of the options listed here. Disable and bypass the PLL. With the PLL enabled, the current to the V_{CC} supply is in the range of a few mA (depending on clock frequency and multiplication factor), while it drops to below 1mA if disabled.
- Use an external clock source. The lowest power clocking mode is when an external clock signal is used. This drops the power consumption to about half that of an external crystal.
- Keep the internal clock rates as low as possible.
- Use a low voltage on the V_{CC} supply.
- Use an external 1.8V supply. This saves the power dissipated by the internal 1.8V linear regulator for the 1.8V core supply. Connect an external 1.8V supply to V_{18} and disable the internal regulator by connecting LDOEN to DGND.

Interrupts and Polling

Monitor the MAX3109 by polling the **ISR** register or by monitoring the $\overline{IRQ}$ output. In polled mode, the $\overline{IRQ}$ physical interrupt output is not used and the host controller polls the **ISR** register at frequent intervals to establish the state of the MAX3109.

Alternatively, the physical $\overline{IRQ}$ interrupt can be used to interrupt the host controller after specified events, making polling unnecessary. The $\overline{IRQ}$ output is an open-drain output that requires a pullup resistor to V_L.

Logic-Level Translation

The MAX3109 can be directly connected to transceivers and controllers that have different supply voltages. The V_L input defines the logic voltage levels of the controller interface, while the V_{EXT} voltage defines the logic of the transceiver interface. This ensures flexibility when selecting a controller and transceiver. Figure 28 shows an example of a configuration where the controller, transceiver, and the MAX3109 are powered by three different supplies.

Power-Supply Sequencing

The device's power supplies can be turned on in any order. Each supply can be present over the entire specified range regardless of the presence or level of the others. Ensure the presence of the interface supplies V_L and V_{EXT} before sending input signals to the controller and transceiver interfaces.

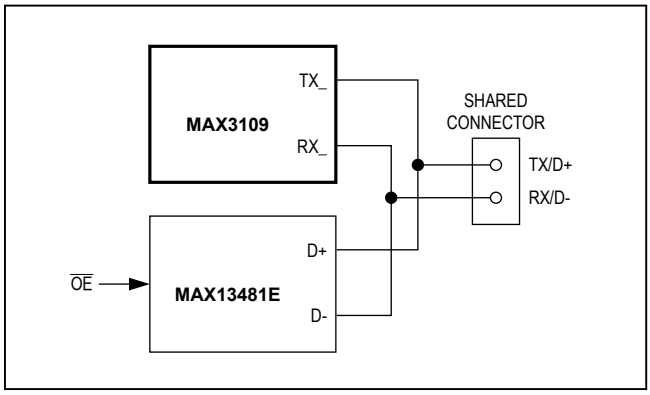

Figure 29. Connector Sharing with a USB Transceiver

Connector Sharing

The TX_ and $\overline{RTS_}$ outputs can be programmed to be high impedance. This feature is used in cases where the MAX3109 shares a common connector with other communications devices. Set the output of the MAX3109 to high impedance when the other communication devices are active. Set the **MODE1**[2]: TxHiZ bit high to set TX_ to a high-impedance state. Set the **MODE1**[3]: RTSHiZ bit high to set $\overline{RTS_}$ to a high-impedance state. Figure 29 shows an example of connector sharing with a USB transceiver.

RS-232 5x3 Application

The four GPIOs can be used to implement the other flow control signals defined in ITU V.24. Figure 30 shows how the GPIOs create the DSR, DTR, DCD, and RI signals found on some RS-232/V.28 interfaces.

Set the **FlowCtrl**[1:0] bits high to enable automatic hardware $\overline{RTS_}$/$\overline{CTS_}$ flow control.

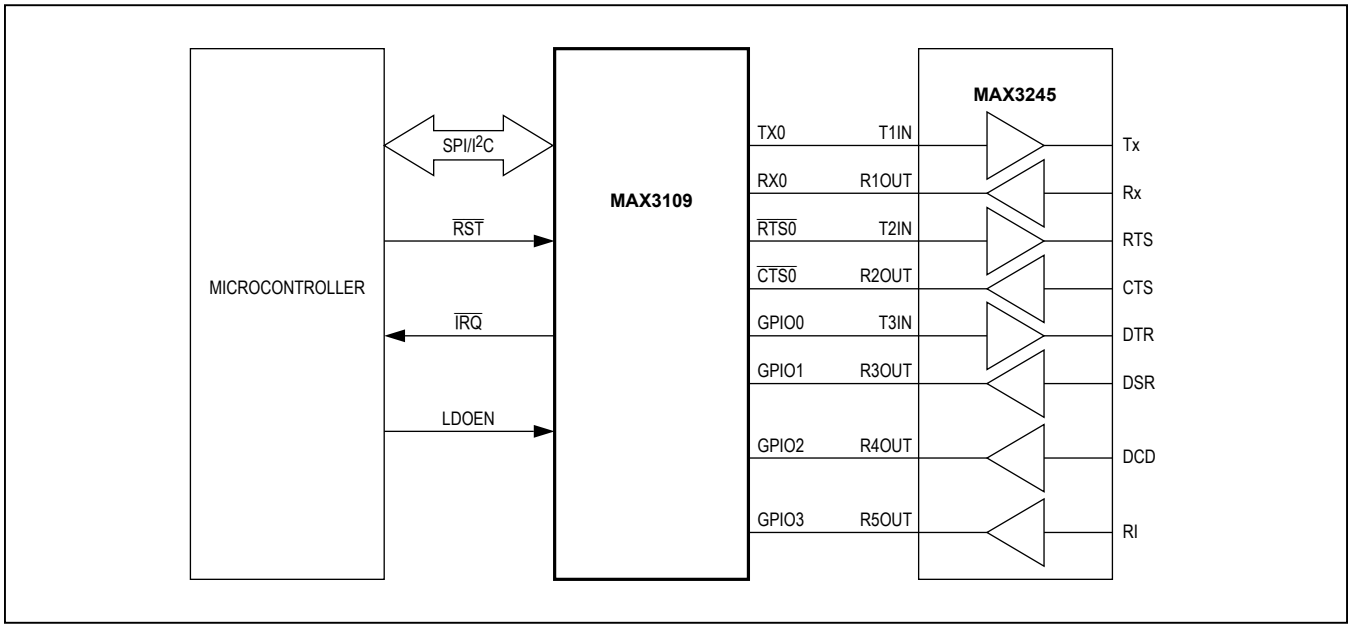

Figure 30. RS-232 Application

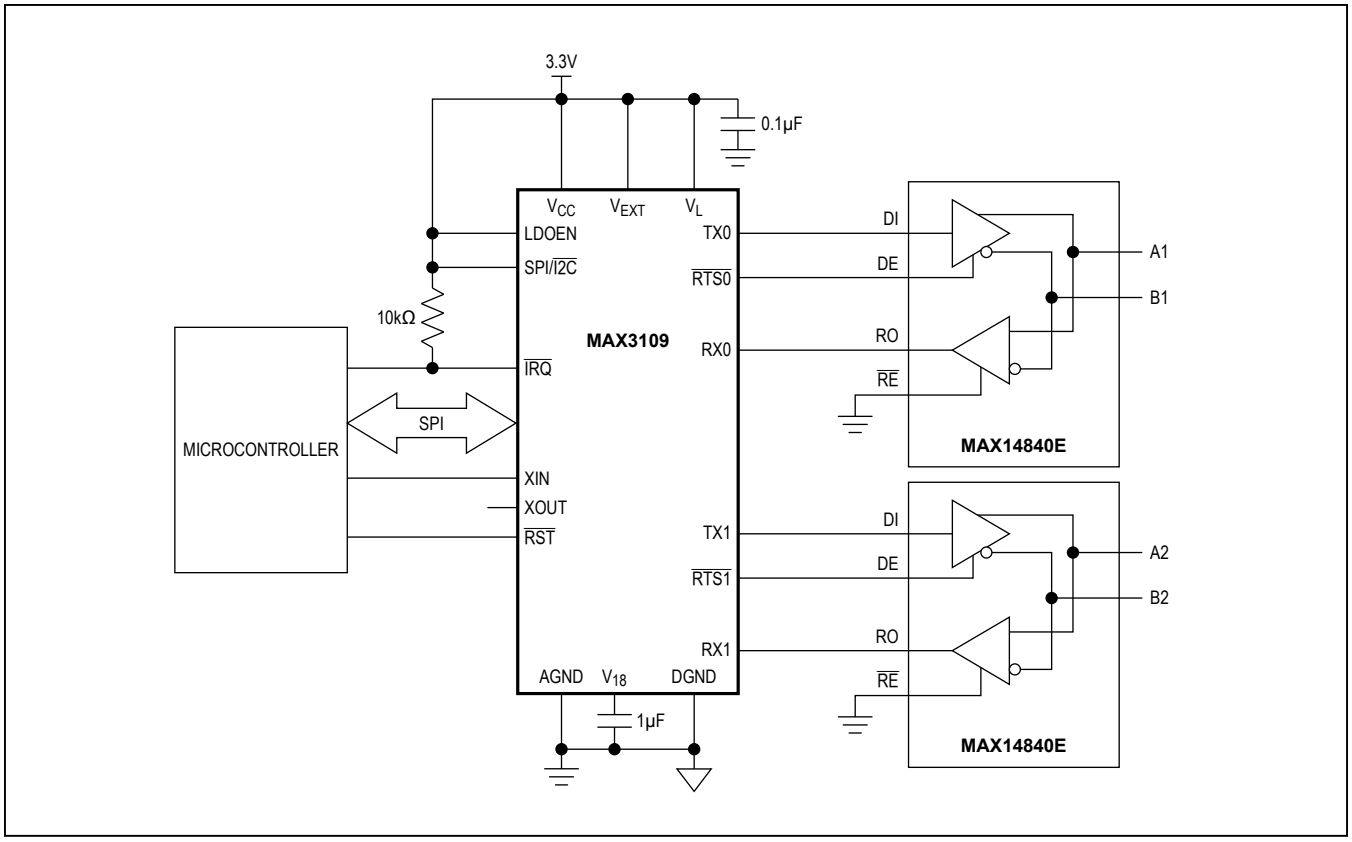

Figure 31. RS-485 Half-Duplex Application

Typical Application Circuit

Figure 31 shows the MAX3109 being used in a half-duplex RS-485 application. The microcontroller, the RS-485 transceiver, and the MAX3109 are powered by a single 3.3V supply. SPI is used as the controller's communication interface. The microcontroller provides an external clock source to clock the UART.

The MAX14840 receiver is always enabled, so echoing occurs. Enable auto echo suppression in the MAX3109 by setting the **MODE2**[7]: EchoSuprs bit high.

Set the **MODE1**[4]: TranscvCtrl bit high to enable auto transceiver direction control in order to automatically control the DE input of the transceiver.

Chip Information

PROCESS: BiCMOS

Ordering Information

PART	TEMP RANGE	PIN-PACKAGE
MAX3109ETJ+	-40ºC to +85ºC	32 TQFN-EP*

+Denotes a lead(Pb)-free/RoHS-compliant package.
**EP = Exposed pad.*

Package Information

For the latest package outline information and land patterns (footprints), go to **www.maximintegrated.com/packages**. Note that a "+", "#", or "-" in the package code indicates RoHS status only. Package drawings may show a different suffix character, but the drawing pertains to the package regardless of RoHS status.

PACKAGE TYPE	PACKAGE CODE	OUTLINE NO.	LAND PATTERN NO.
32 TQFN-EP	T3255+4	21-0140	90-0012

Revision History

REVISION NUMBER	REVISION DATE	DESCRIPTION	PAGES CHANGED
0	3/11	Initial release	—
1	5/12	Corrected for improved shutdown current mode and specifications, including low-power shutdown mode configurations	1, 7, 14, 15, 27, 38, 62
2	10/12	Updated *DC Electrical Characteristics*, updated *Pin Description*, updated Register Map, updated recommended capacitor value, updated IRQ text, updated Figure 31	9, 16, 28, 52, 56, 65
3	2/15	Added to the *Receive and Transmit* FIFOs section a note about how the TxFIFOLvl and RxFIFOLvl values can be in error, added a note to the *Transmitter Operation* and *Receiver Operation* sections about how errors can occur; updated the RHR, THR, TxFIFOLvl, and RxFIFOLvl register bit descriptions.	16, 17, 29, 43
4	5/15	Removed automotive reference in the *Applications* section, revised the *Benefits and Features* section, and updated the outline number in the *Package Information* table	1, 65
5	8/16	Updated package code.	65

For pricing, delivery, and ordering information, please contact Maxim Direct at 1-888-629-4642, or visit Maxim Integrated's website at www.maximintegrated.com.

Maxim Integrated cannot assume responsibility for use of any circuitry other than circuitry entirely embodied in a Maxim Integrated product. No circuit patent licenses are implied. Maxim Integrated reserves the right to change the circuitry and specifications without notice at any time. The parametric values (min and max limits) shown in the Electrical Characteristics table are guaranteed. Other parametric values quoted in this data sheet are provided for guidance.

Maxim Integrated and the Maxim Integrated logo are trademarks of Maxim Integrated Products, Inc. © 2016 Maxim Integrated Products, Inc.

Компания «ЭлектроПласт» предлагает заключение долгосрочных отношений при поставках импортных электронных компонентов на взаимовыгодных условиях!

Наши преимущества:

- Оперативные поставки широкого спектра электронных компонентов отечественного и импортного производства напрямую от производителей и с крупнейших мировых складов;
- Поставка более 17-ти миллионов наименований электронных компонентов;
- Поставка сложных, дефицитных, либо снятых с производства позиций;
- Оперативные сроки поставки под заказ (от 5 рабочих дней);
- Экспресс доставка в любую точку России;
- Техническая поддержка проекта, помощь в подборе аналогов, поставка прототипов;
- Система менеджмента качества сертифицирована по Международному стандарту ISO 9001;
- Лицензия ФСБ на осуществление работ с использованием сведений, составляющих государственную тайну;
- Поставка специализированных компонентов (Xilinx, Altera, Analog Devices, Intersil, Interpoint, Microsemi, Aeroflex, Peregrine, Syfer, Eurofarad, Texas Instrument, Miteq, Cobham, E2V, MA-COM, Hittite, Mini-Circuits,General Dynamics и др.);

Помимо этого, одним из направлений компании «ЭлектроПласт» является направление «Источники питания». Мы предлагаем Вам помощь Конструкторского отдела:

- Подбор оптимального решения, техническое обоснование при выборе компонента;
- Подбор аналогов;
- Консультации по применению компонента;
- Поставка образцов и прототипов;
- Техническая поддержка проекта;
- Защита от снятия компонента с производства.

Как с нами связаться

Телефон: 8 (812) 309 58 32 (многоканальный)
Факс: 8 (812) 320-02-42
Электронная почта: org@eplast1.ru
Адрес: 198099, г. Санкт-Петербург, ул. Калинина, дом 2, корпус 4, литера А.