Eval Kit Manual

CCS811

Standard Board

CCS811-LG_EK_ST

Content Guide

1 Introduction 3
2 General Description 3
2.1 USB to I²C Board (ENS-USB-I2CIO) 3
2.2 CCS811 Sensor Board (ENS-CCS811-SB) 4
3 Software Installation 5
4 Board Interface and Test Points 6
4.1 Board Interface 6
4.2 Test Points 6
5 Schematic, PCB Layout and Bill of Materials 7
5.1 Schematic Design 7
5.2 Bill of Materials (BOM) 7
5.2.1 USB to I²C Board (ENS-USB-I2CIO) 7
5.2.2 CCS811 Sensor Board (ENS-CCS811-SB) 7
6 Summary 8
7 Ordering & Contact Information 9
8 Copyrights & Disclaimer 10
9 Revision Information 11

1 Introduction

The document provides an overview of the CCS811 evaluation kit and covers the following topics: evaluation kit general description, software installation, board interface, test points, schematics, PCB layout and bill of materials (BOM).

2 General Description

The CCS811 evaluation kit comes with the following components:

- ENS-USB-I2CIO : USB to I²C board
- ENS-CCS811-SB : CCS811 sensor board
- Thanks Card containing URL to download related software and documentation
- USB 2.0 A Male to Micro B cable

2.1 USB to I²C Board (ENS-USB-I2CIO)

The USB to I²C board refer to as ENS-USB-I2CIO, as shown in Figure 1, allows control and measurement of the CCS811 sensor board using the ENS Dashboard. By default the USB to I²C board provides a 3.3 V supply to the CCS811 sensor board.

Figure 1 USB to I²C Board

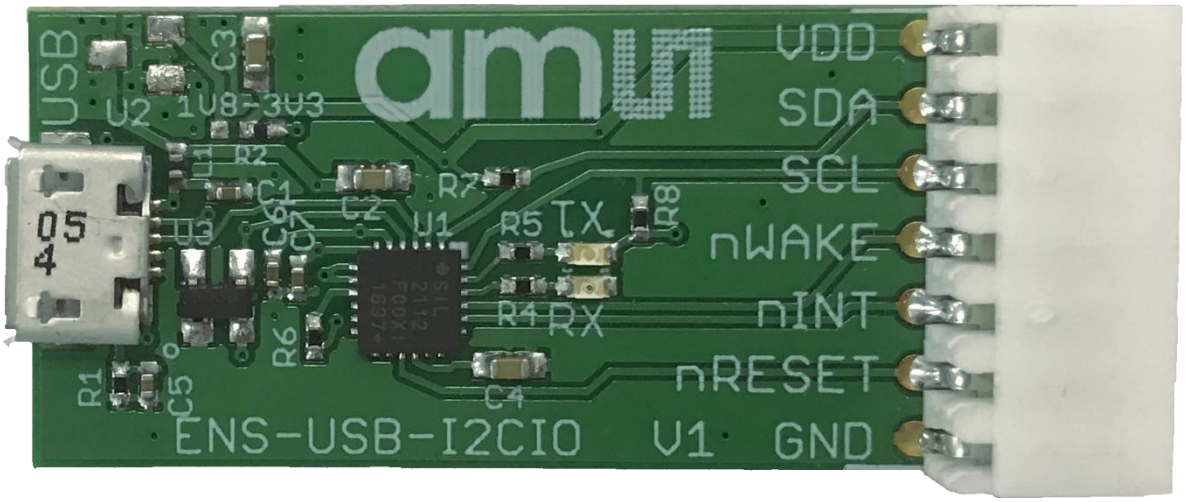

The USB to I²C board has the following key features:

- Silicon Labs CP2112 device which provides a simple solution for controlling I²C slave, the nWAKE and nRESET signals and monitors the nINT signal
- Board dimensions 42mm length x 18mm width
- Standard micro USB connector and board interface with power (VDD, GND) and I²C Signal (SCL, SDA).
- Supports Standard I²C mode (100 kHz) and Fast I²C mode (400 kHz)

2.2 CCS811 Sensor Board (ENS-CCS811-SB)

The CCS811 sensor board refer to as ENS-CCS811-SB, as shown in Figure 2, is an evaluation platform for the CCS811 device. It contains a CCS811 digital VOC gas sensor with an ENS210 relative humidity and temperature sensor and has I²C interface which is compatible with the USB to I²C board for USB connection to PC / laptop

Figure 2 CCS811 Sensor Board

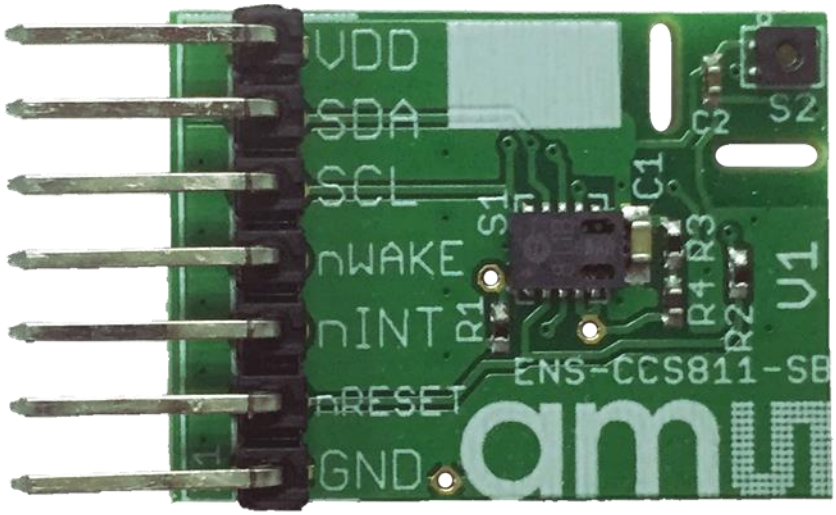

The sensor board has the following key features:

- CCS811 ultra-low power digital gas sensor for monitoring indoor air quality
- ENS210 relative humidity and temperature sensor with I²C Interface used to compensate for environmental changes
- Board dimensions 25mm length x 18mm width
- Board interface with power (VDD, GND) and I²C Signal (SCL, SDA).
- Sensor chips support standard I²C mode (100 kHz) and fast I²C mode (400 kHz)
- Sensor board supports 1.8 V to 3.6 V

By plugging the CCS811 sensor board into the USB to I²C board as shown in Figure 3, direct connection to PC is enabled via USB.

Figure 3 CCS811 Sensor Board with USB to I²C board

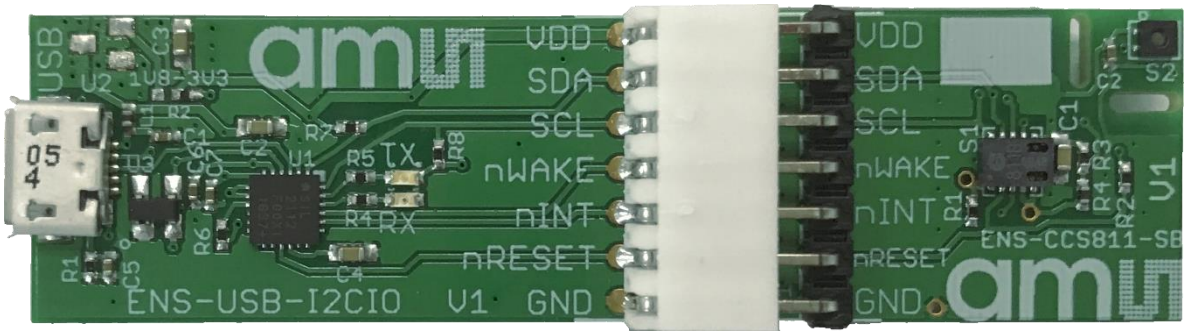

A block diagram of the CCS811-LG_EK_ST which illustrates the end-to-end connection between the PC via USB to I²C board (ENS-USB-I2CIO) and CCS811 sensor board (ENS-CCS811-SB) is shown in Figure 4 below.

Figure 4 Block Diagram of CCS811-LG_EK_ST

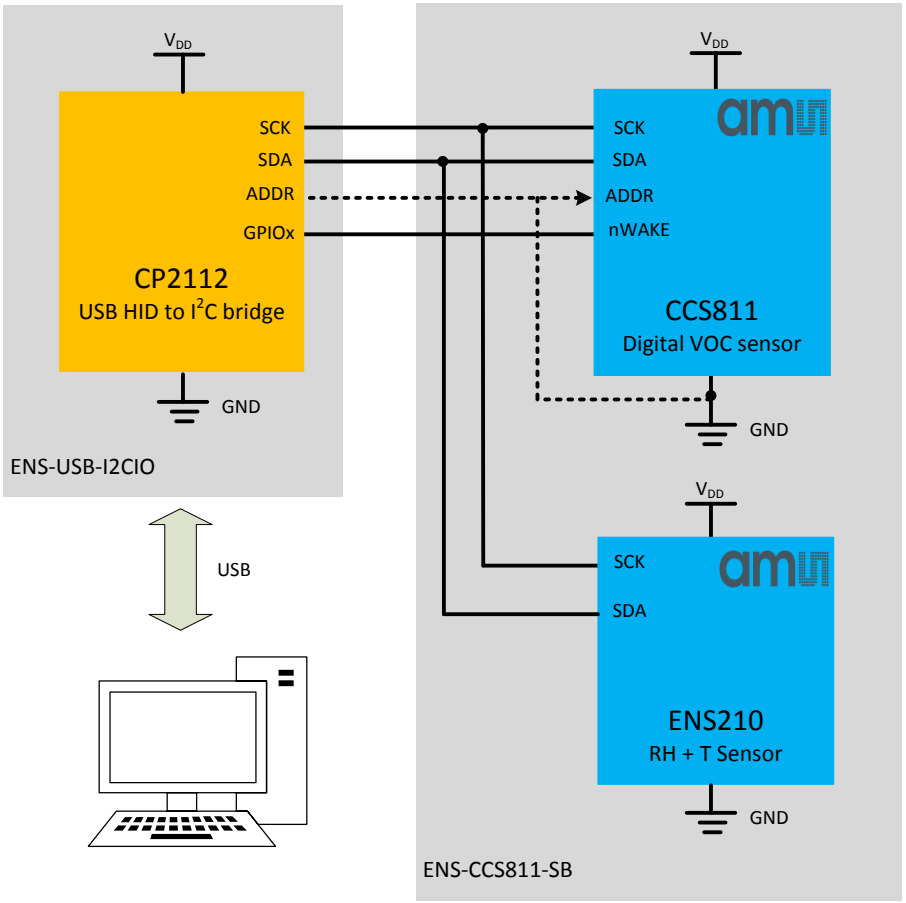

Relative humidity and temperature data from ENS210 can be read on the I²C bus and this information can be written to CCS811 to compensate for temperature and humidity changes for indoor air quality monitoring.

3 Software Installation

Quick steps:

- Connect CCS811 sensor board (ENS-CCS811-SB) into USB to I²C board (ENS-USB-I2CIO)
- Connect USB to I²C board (ENS-USB-I2CIO) via USB cable to Windows PC
- Install Windows PC ENS dashboard application available at http://ens.ams.com/

The ENS Dashboard application setup wizard will be launched and guide you through the installation, please refer to the ENS Dashboard user manual.

4 Board Interface and Test Points

4.1 Board Interface

The signal labels and pin designators for the interface are shown in Figure 5.

Figure 5 Board Interface

in (s)	Label	Description
1	VDD	Supply voltage
2	SDA	I²C data
3	SCL	I²C clock
4	nWAKE	Wake up pin. Active low
5	nINT	Optional interrupt pin. Active low
6	nRESET	Optional reset pin. Active low
7	GND	Ground

4.2 Test Points

There are 3 test points for I²C address, GND and PWM as shown below on the CCS811 sensor board (ENS-CCS811-SB).

Figure 6 CCS811 Sensor Board Test Points

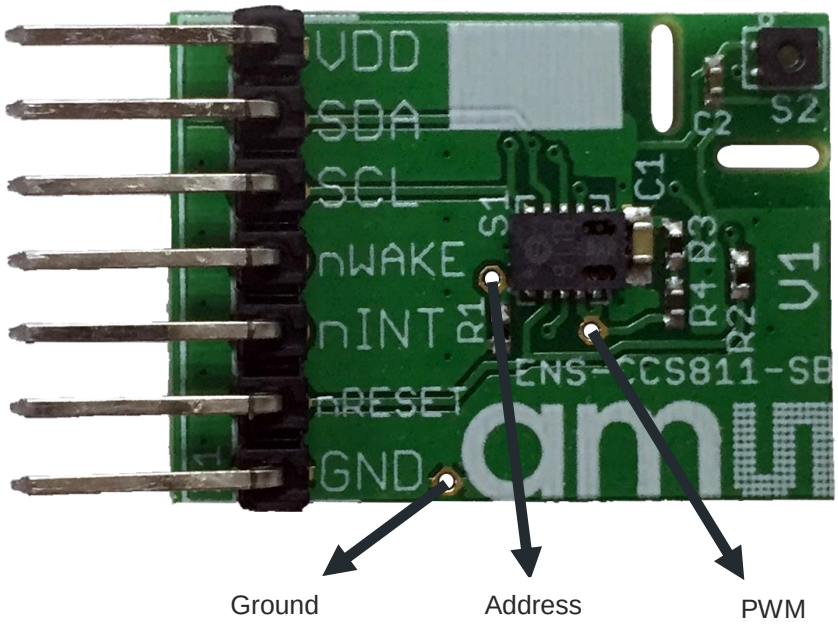

5 Schematic, PCB Layout and Bill of Materials

The schematic design, PCB layout and bill of materials (BOM) for CCS811-LG_EK_ST is documented in the following sections.

5.1 Schematic Design

The schematic design for USB to I²C board (ENS-USB-I2CIO) and the CCS811 sensor board (ENS-CCS811-SB) is documented at the end of the document.

5.2 Bill of Materials (BOM)

The bill of materials (BOM) for the USB to I²C board (ENS-USB-I2CIO) and CCS811 sensor board (ENS-CCS811-SB) are shown in the following sections.

5.2.1 USB to I²C Board (ENS-USB-I2CIO)

Figure 7 Bill of Materials (BOM) for the USB to I²C Board

Label	Description	Part Number	Manufacturer
U1	IC - USB to I²C bridge QFN24	CP2112	Silicon labs
U3	ESD Protection Device SOT-14	SP0503BAHTG	LITTLEFUSE
R1	330K Resistor 0402	CRG0402J330K	TE CONNECTIVITY
R2	0R Jumper Resistor 0402	ERJ-2GE0R00X	PANASONIC ELECTRONIC
R4, R5	1K Resistor 0402	ASC0402-1K0FT10	WELWYN
R6, R7, R8	4K7 Resistor 0402	CRG0402F4K7	TE CONNECTIVITY
L1	Inductor 0402-N	742843122	WURTH ELEKTRONIK
C1,C6,C7	100nF Capacitor 0402	MC0402X104K100CT	MULTICOMP
C2, C3, C4	4.7uF Capacitor 0402	GRM188R61A475KE15D	Murata
C5	10nF Capacitor 0402-N	MCCA000077	MULTICOMP
LED1-TX	Chip LED 0603	150060GS75000	WURTH ELEKTRONIK
LED2-RX	Chip LED 0603	150060YS75000	WURTH ELEKTRONIK
USB	USB_MICROBOUT	47346-0001	Molex
X1	Board-To-Board Connector	38-00-1337	Molex

5.2.2 CCS811 Sensor Board (ENS-CCS811-SB)

Figure 8 Bill of Materials (BOM) for the CCS811 sensor Board

Label	Description	Part Number	Manufacturer
S1	CCS811B Digital gas sensor for indoor air quality monitoring	CCS811B-JOPR	ams AG

Label	Description	Part Number	Manufacturer
S2	Relative Humidity and Temperature Sensor with I²C Interface	ENS210-LQFM	ams AG
X1	Connector 7pin 2.54mm	22-28-6070	Molex
C1	100nF Capacitor 0402	MC0402X104K100CT	MULTICOMP
C2	4.7uF Capacitor 0402	GRM188R61A475KE15D	Murata
R1	100KΩ Resistor 0402	MCWR04X1003FTL	MULTICOMP
R2(8-4)	100kΩ NTC Thermistor 0402-N	NCP15WF104F03RC	Murata

6 Summary

This document describes the CCS811 evaluation kit about what it is and how to use it from the user point of view.

7 Ordering & Contact Information

Ordering Code	Description
CCS811-LG_EK_ST	CCS811 Eval Kit Standard Board

Technical Support is available at:

www.ams.com/Technical-Support

Provide feedback about this document at:

www.ams.com/Document-Feedback

For further information and requests, e-mail us at:

ams_sales@ams.com

For sales offices, distributors and representatives, please visit:

www.ams/com/contact

Headquarters

ams AG

Tobelbader Strasse 30

8141 Premstaetten

Austria, Europe

Tel: +43 (0) 3136 500 0

Website: www.ams.com

8 Copyrights & Disclaimer

Copyright ams AG, Tobelbader Strasse 30, 8141 Premstaetten, Austria-Europe. Trademarks Registered. All rights reserved. The material herein may not be reproduced, adapted, merged, translated, stored, or used without the prior written consent of the copyright owner.

Demo Kits, Evaluation Kits and Reference Designs are provided to recipient on an “as is” basis for demonstration and evaluation purposes only and are not considered to be finished end-products intended and fit for general consumer use, commercial applications and applications with special requirements such as but not limited to medical equipment or automotive applications. Demo Kits, Evaluation Kits and Reference Designs have not been tested for compliance with electromagnetic compatibility (EMC) standards and directives, unless otherwise specified. Demo Kits, Evaluation Kits and Reference Designs shall be used by qualified personnel only.

ams AG reserves the right to change functionality and price of Demo Kits, Evaluation Kits and Reference Designs at any time and without notice.

Any express or implied warranties, including, but not limited to the implied warranties of merchantability and fitness for a particular purpose are disclaimed. Any claims and demands and any direct, indirect, incidental, special, exemplary or consequential damages arising from the inadequacy of the provided Demo Kits, Evaluation Kits and Reference Designs or incurred losses of any kind (e.g. loss of use, data or profits or business interruption however caused) as a consequence of their use are excluded.

ams AG shall not be liable to recipient or any third party for any damages, including but not limited to personal injury, property damage, loss of profits, loss of use, interruption of business or indirect, special, incidental or consequential damages, of any kind, in connection with or arising out of the furnishing, performance or use of the technical data herein. No obligation or liability to recipient or any third party shall arise or flow out of ams AG rendering of technical or other services.

9 Revision Information

Changes from previous version to current revision 1-01 (2017-Jan-16)	Page
Minor updates only	

Note: Page numbers for the previous version may differ from page numbers in the current revision.
Correction of typographical errors is not explicitly mentioned.

ENS-CCS811-SB

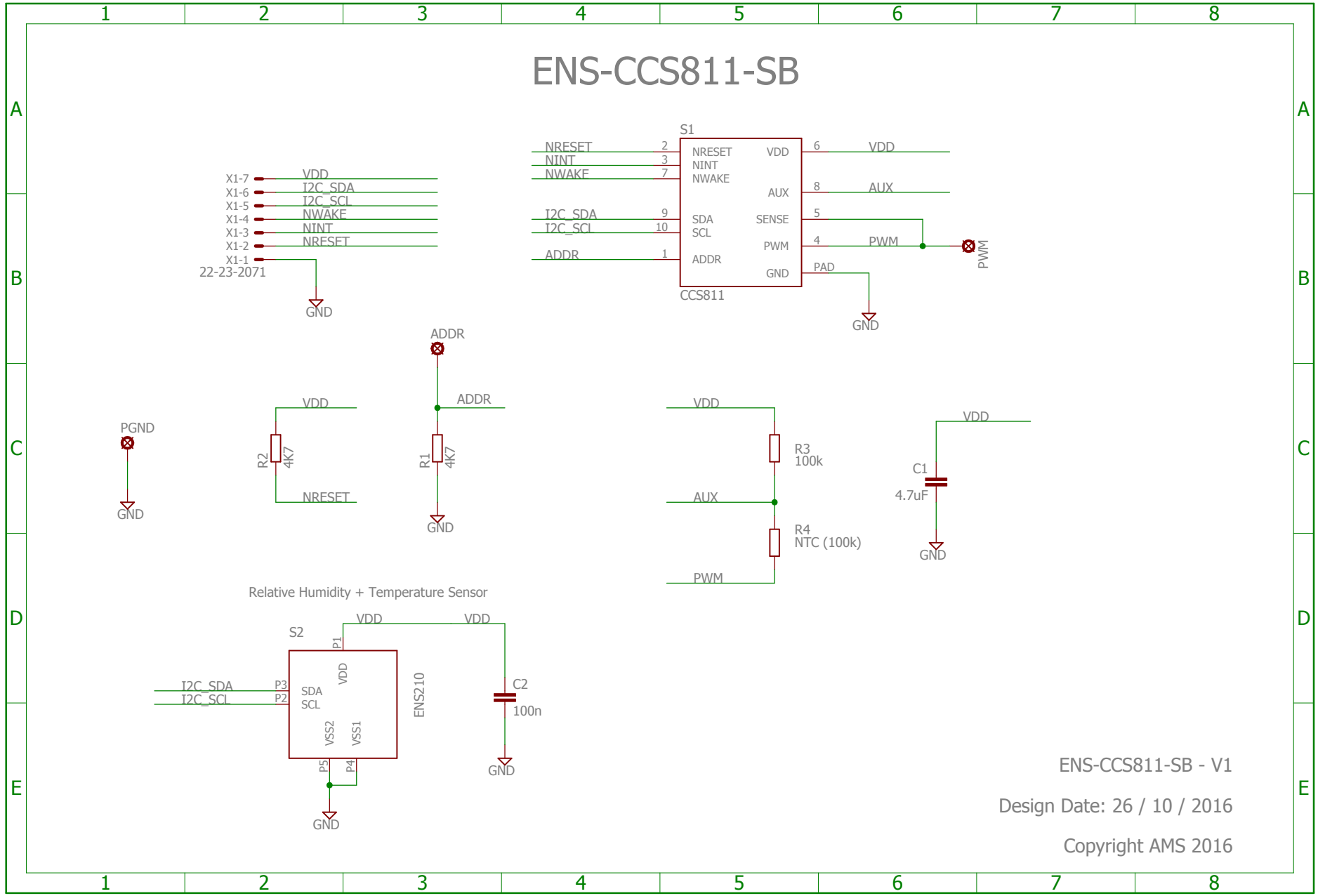

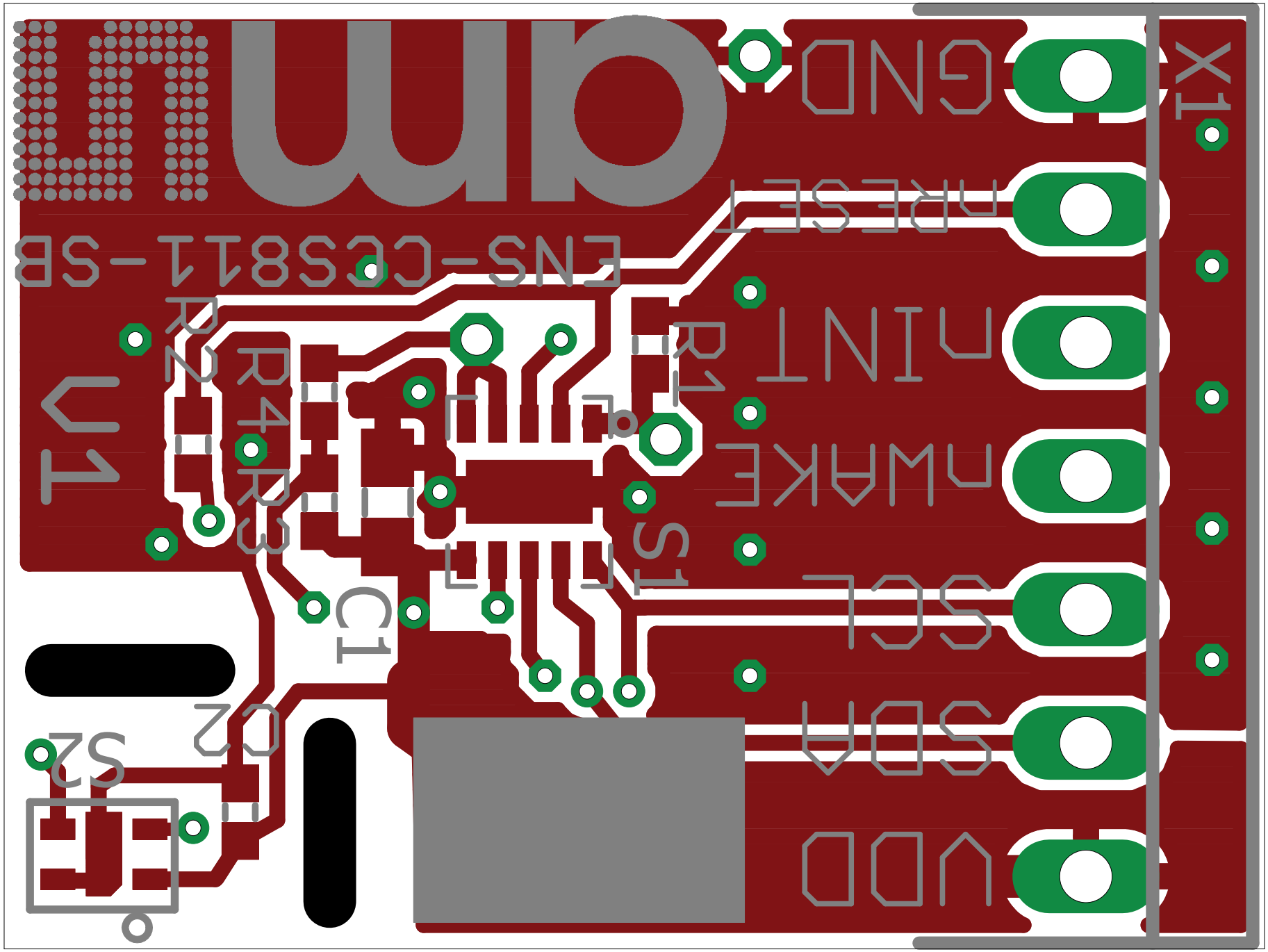
GND
RRESET
NINT
NWAKE
SCL
SDA
VDD
X1
ENS-CCS811-SB
U1
R2
R4
R3
R1
S1
C1
C2
S2

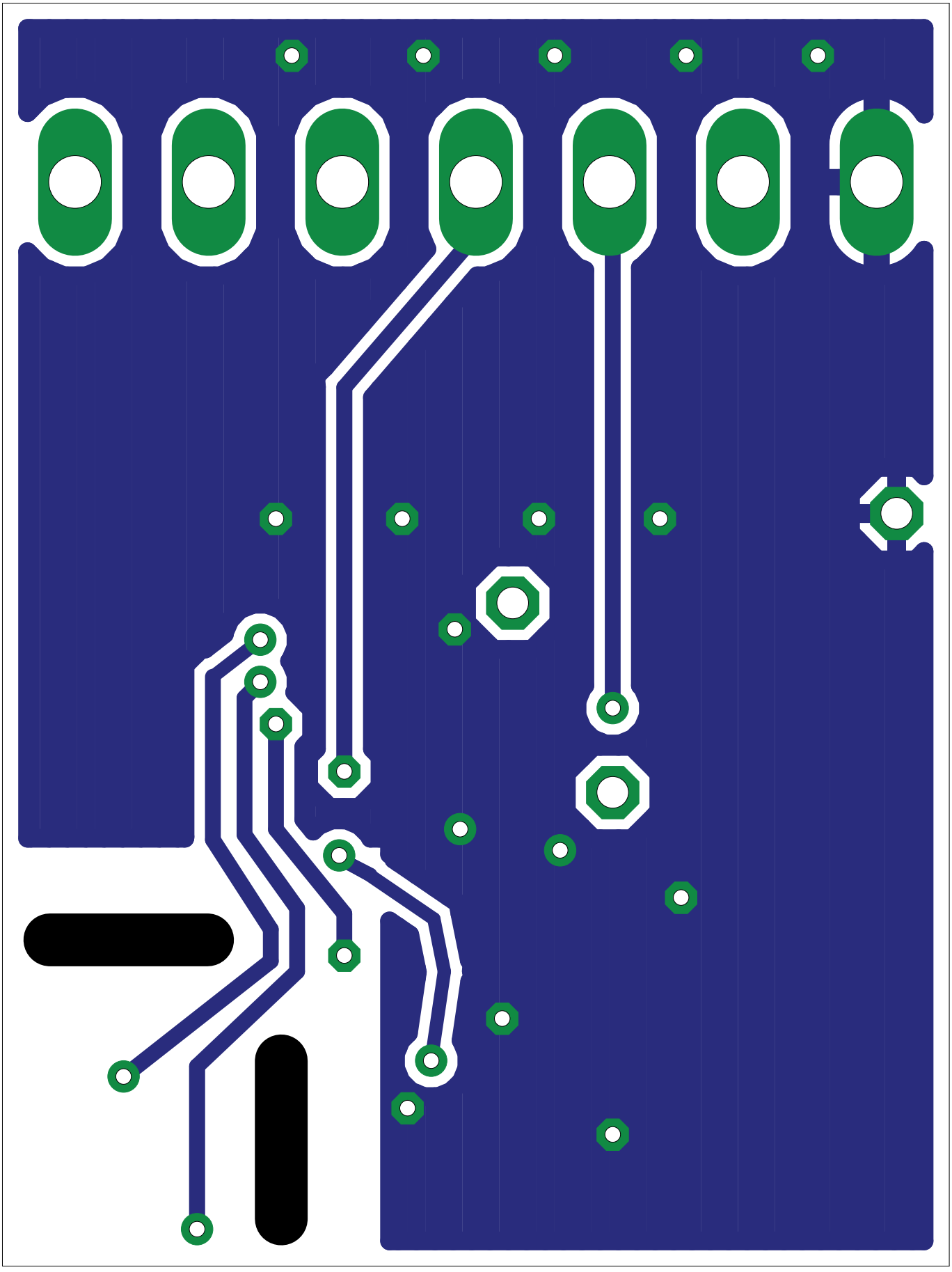

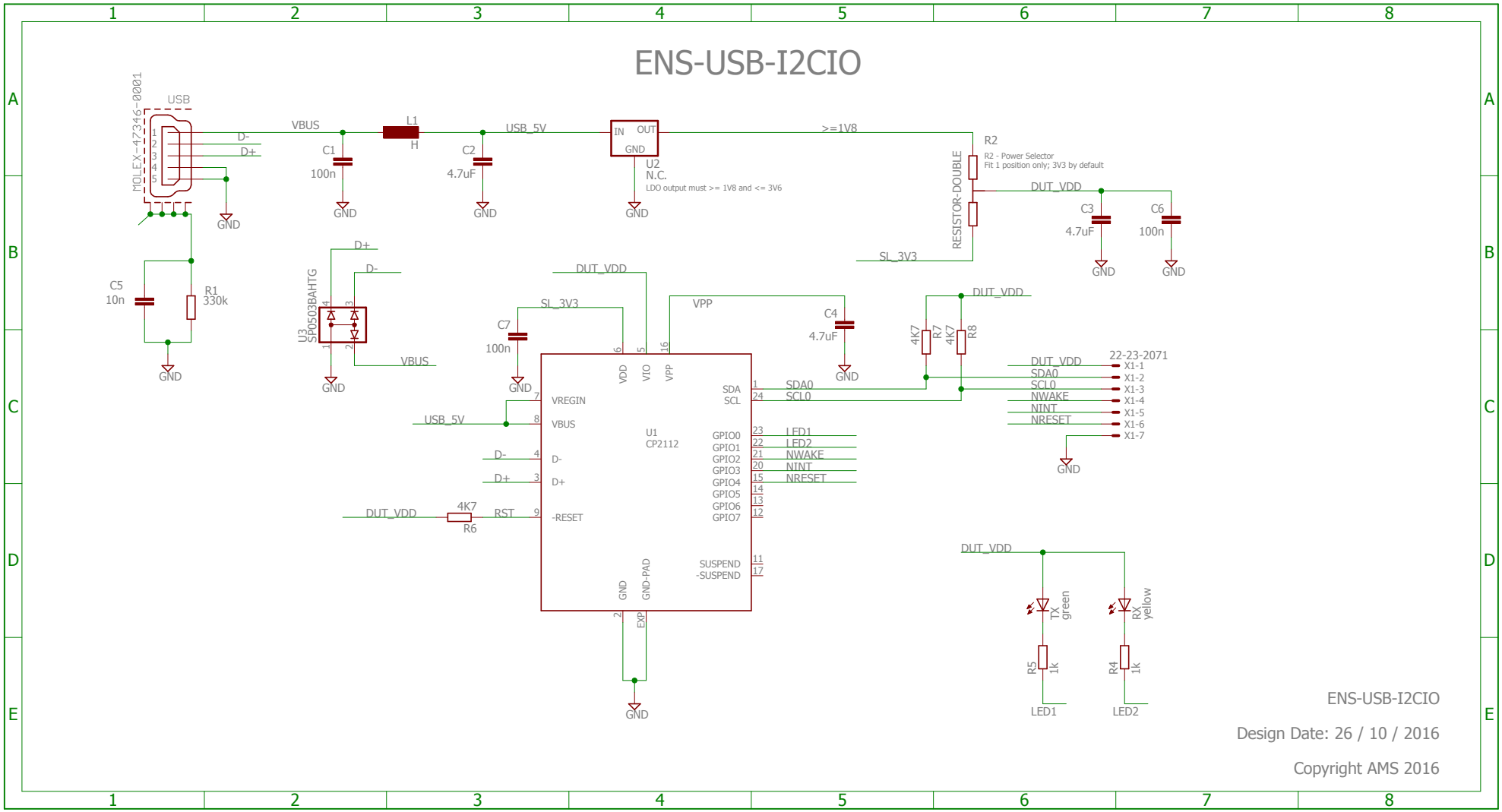
ENS-USB-I2CIO
USB
MOLEX-47346-0001
D-
D+
VBUS
GND
L1
H
C1
100n
C2
4.7uF
USB_5V
U2
N.C.
LDO output must >= 1V8 and <= 3V6
IN
OUT
>=1V8
R2
R2 - Power Selector
Fit 1 position only; 3V3 by default
RESISTOR-DOUBLE
DUT_VDD
SL_3V3
C3
4.7uF
C6
100n
C5
10n
R1
330k
U3
SP0503BAHTG
C7
100n
VPP
C4
4.7uF
4K7
R7
R8
U1
CP2112
VREGIN
VBUS
D-
D+
-RESET
VDD
VIO
SDA
SCL
GPIO0
GPIO1
GPIO2
GPIO3
GPIO4
GPIO5
GPIO6
GPIO7
SUSPEND
-SUSPEND
GND-PAD
EXP
LFD1
LFD2
NWAKE
NINT
NRESET
SDA0
SCL0
RST
R6
22-23-2071
X1-1
X1-2
X1-3
X1-4
X1-5
X1-6
X1-7
TX
green
RX
yellow
R5
1k
R4
1k
LED1
LED2
ENS-USB-I2CIO
Design Date: 26 / 10 / 2016
Copyright AMS 2016

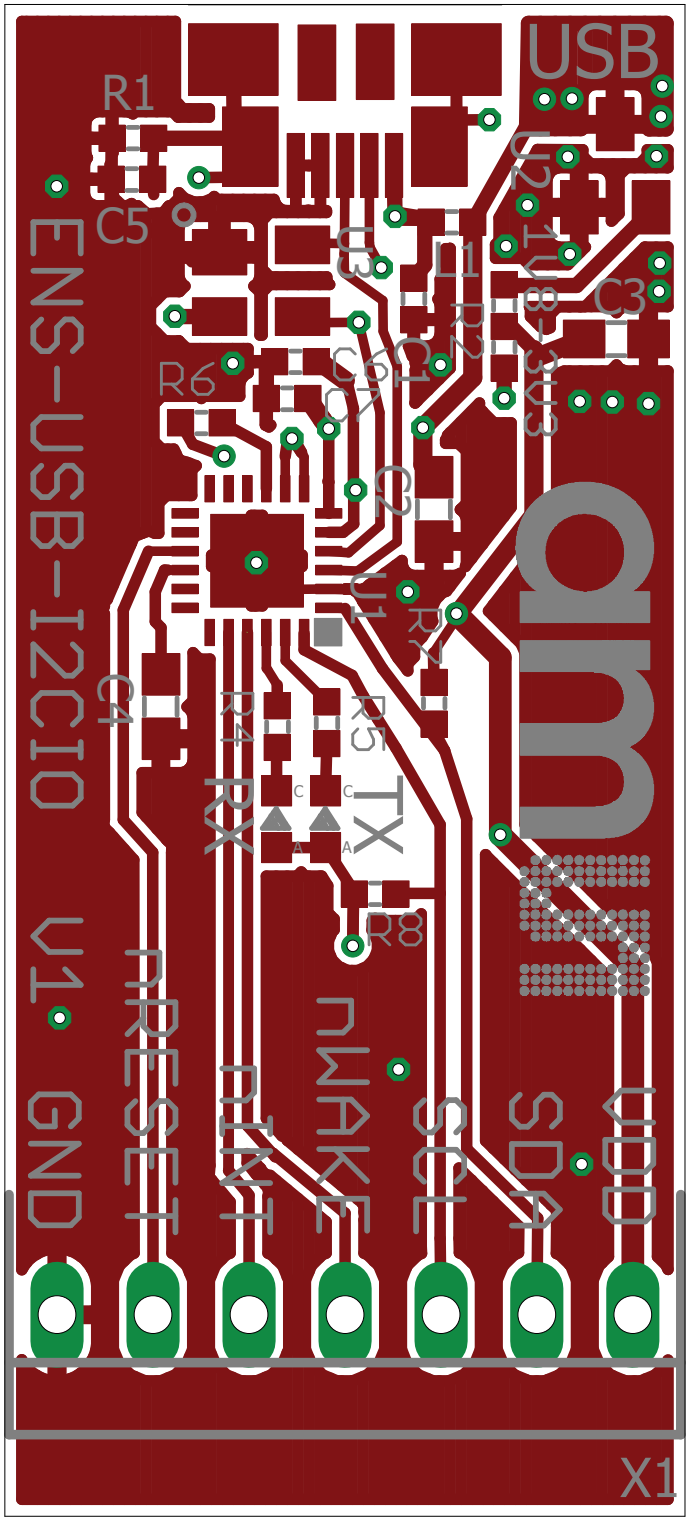
USB
R1
C5
ENS-USB-I2CIO
U1
R6
C3
R2
C1
C6
C7
C2
U1
R7
C4
R4
R5
TX
RX
R8
V1
GND
nRESET
nINT
nWAKE
SCL
SDA
VDD
X1

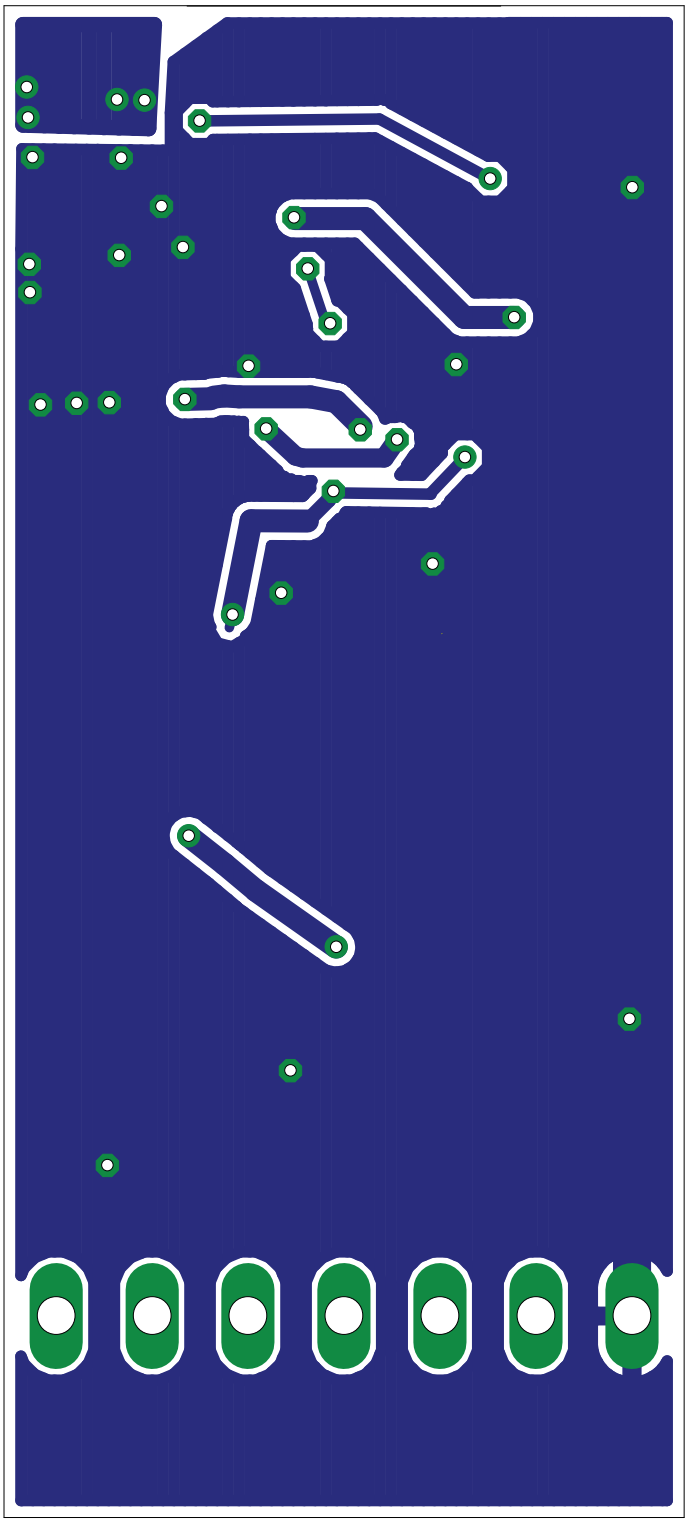

Компания «ЭлектроПласт» предлагает заключение долгосрочных отношений при поставках импортных электронных компонентов на взаимовыгодных условиях!

Наши преимущества:

- Оперативные поставки широкого спектра электронных компонентов отечественного и импортного производства напрямую от производителей и с крупнейших мировых складов;
- Поставка более 17-ти миллионов наименований электронных компонентов;
- Поставка сложных, дефицитных, либо снятых с производства позиций;
- Оперативные сроки поставки под заказ (от 5 рабочих дней);
- Экспресс доставка в любую точку России;
- Техническая поддержка проекта, помощь в подборе аналогов, поставка прототипов;
- Система менеджмента качества сертифицирована по Международному стандарту ISO 9001;
- Лицензия ФСБ на осуществление работ с использованием сведений, составляющих государственную тайну;
- Поставка специализированных компонентов (Xilinx, Altera, Analog Devices, Intersil, Interpoint, Microsemi, Aeroflex, Peregrine, Syfer, Eurofarad, Texas Instrument, Miteq, Cobham, E2V, MA-COM, Hittite, Mini-Circuits,General Dynamics и др.);

Помимо этого, одним из направлений компании «ЭлектроПласт» является направление «Источники питания». Мы предлагаем Вам помощь Конструкторского отдела:

- Подбор оптимального решения, техническое обоснование при выборе компонента;
- Подбор аналогов;
- Консультации по применению компонента;
- Поставка образцов и прототипов;
- Техническая поддержка проекта;
- Защита от снятия компонента с производства.

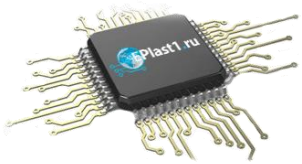

Как с нами связаться

Телефон: 8 (812) 309 58 32 (многоканальный)
Факс: 8 (812) 320-02-42
Электронная почта: org@eplast1.ru
Адрес: 198099, г. Санкт-Петербург, ул. Калинина, дом 2, корпус 4, литера А.