Innovative Service Around the Globe YAGEO

DATA SHEET

TRANSIENT VOLTAGE SUPPRESSORS
AC/DC POWER SUPPLY

1.5KE series

RoHS compliant & Halogen free

Product specification– April 29, 2019 V.0

Transient Voltage Suppressors (TVS) Data Sheet

Features

- Glass passivated junction
- Low zener impedance
- Excellent clamping capability
- 1500W peak pulse power capability at 10/1000μs waveform, repetition rate (duty cycle): 0.01%
- Fast response time
- Typical I_R less than 1μA above 12V.
- High Temperature soldering guaranteed: 265℃/10 seconds/.375″, (9.5mm) lead length, 5lbs (2.3kg) tension
- Plastic package has underwriters laboratory flammability 94V-0
- Meets MSL level 1, per J-STD-020.
- Safety certification: UL: E244458

Mechanical Data

- Case: JEDEC DO-201 Moulded plastic
- Terminal: Axial leads, solderable per MIL-STD-750, Method 2026
- Polarity: Color band denotes cathode except bi-directional models
- Mounting Position: Any
- Weight: 0.97g

Applications

- I/O interface
- AC/DC power supply
- Low frequency signal transmission line (RS232, RS485, etc.)

Maximum Ratings and Characteristics

Ratings at 25℃ ambient temperature unless otherwise specified.

Rating	Symbol	Value	Units
Peak pulse power dissipation at 10/1000μs waveform (Note1, Fig.1)	P_{PPM}	Minimum 1500	Watts
Peak pulse current of at 10/1000μs waveform (Note 1, Fig.3)	I_{PPM}	See Table	Amps
Steady state power dissipation at T_L=75℃ (Fig.5)	$P_{M(AV)}$	6.5	Watts
Peak forward surge current, 8.3ms single half sine-wave superimposed on rated load, (JEDEC Method) (Note2, Fig.6)	I_{FSM}	200	Amps
Operating junction and Storage Temperature Range.	T_J,T_{STG}	-55 to +175	℃
Typical thermal resistance junction to lead	$R_{\theta JL}$	15	℃/W
Typical thermal resistance junction to ambient	$R_{\theta JA}$	75	℃/W

Notes: 1. Non-repetitive current pulse, per Fig.3 and derated above T_A=25℃ per Fig.2.
2. 8.3ms single half sine-wave, or equivalent square wave, duty cycle=4 pulses per minutes maximum.

Dimensions (DO-201)

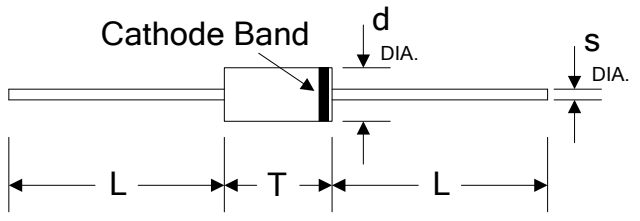

Symbol	Millimeters		Inches	
	Min.	Max.	Min.	Max.
L	25.40	-	1.000	-
T	7.20	9.50	0.285	0.375
d	4.80	5.30	0.190	0.210
s	0.96	1.07	0.038	0.042

Part Number Code

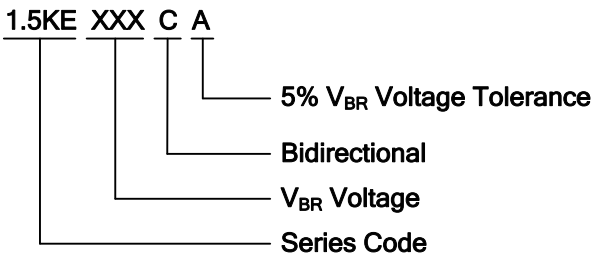

Ordering Code for different package

Box package: Add suffix "/B" at the end of the part number, such as 1.5KE100CA/B

Reel package: Add suffix "/TR13" at the end of the part number, such as 1.5KE75A/TR13

Electrical Characteristics (T_A=25℃)

Part Number		Reverse Stand-Off Voltage	Breakdown Voltage @I_T	Test Current	Maximum Clamping Voltage @I_{PP}	Peak Pulse Current	Reverse Leakage @V_{RWM}
Unidirectional	Bidirectional	V_{RWM}(V)	V_{BR}(V)	I_T(mA)	V_C(V)	I_{PP}(A)	I_R(μA)
1.5KE6.8A	1.5KE6.8CA	5.80	6.45~7.14	10	10.5	144.8	1000
1.5KE7.5A	1.5KE7.5CA	6.40	7.13~7.88	10	11.3	134.5	500
1.5KE8.2A	1.5KE8.2CA	7.02	7.79~8.61	10	12.1	125.6	200
1.5KE9.1A	1.5KE9.1CA	7.78	8.65~9.55	1	13.4	113.4	50
1.5KE10A	1.5KE10CA	8.55	9.50~10.50	1	14.5	104.8	10
1.5KE11A	1.5KE11CA	9.40	10.50~11.60	1	15.6	97.4	5
1.5KE12A	1.5KE12CA	10.20	11.40~12.60	1	16.7	91.0	5
1.5KE13A	1.5KE13CA	11.10	12.40~13.70	1	18.2	83.5	1
1.5KE15A	1.5KE15CA	12.80	14.30~15.80	1	21.2	71.7	1
1.5KE16A	1.5KE16CA	13.60	15.20~16.80	1	22.5	67.6	1
1.5KE18A	1.5KE18CA	15.30	17.10~18.90	1	25.2	60.3	1

Electrical Characteristics (T_A=25℃)

Part Number		Reverse Stand-Off Voltage	Breakdown Voltage @I_T	Test Current	Maximum Clamping Voltage @I_{PP}	Peak Pulse Current	Reverse Leakage @V_{RWM}
Unidirectional	Bidirectional	V_{RWM}(V)	V_{BR}(V)	I_T(mA)	V_C(V)	I_{PP}(A)	I_R(μA)
1.5KE20A	1.5KE20CA	17.10	19.00~21.00	1	27.7	54.9	1
1.5KE22A	1.5KE22CA	18.80	20.90~23.10	1	30.6	49.7	1
1.5KE24A	1.5KE24CA	20.50	22.80~25.20	1	33.2	45.8	1
1.5KE27A	1.5KE27CA	23.10	25.70~28.40	1	37.5	40.5	1
1.5KE30A	1.5KE30CA	25.60	28.50~31.50	1	41.4	36.7	1
1.5KE33A	1.5KE33CA	28.20	31.40~34.70	1	45.7	33.3	1
1.5KE36A	1.5KE36CA	30.80	34.20~37.80	1	49.9	30.5	1
1.5KE39A	1.5KE39CA	33.30	37.10~41.00	1	53.9	28.2	1

Electrical Characteristics (T_A=25℃)

Part Number		Reverse Stand-Off Voltage	Breakdown Voltage @I_T	Test Current	Maximum Clamping Voltage @I_{PP}	Peak Pulse Current	Reverse Leakage @V_{RWM}
Unidirectional	Bidirectional	V_{RWM}(V)	V_{BR}(V)	I_T(mA)	V_C(V)	I_{PP}(A)	I_R(μA)
1.5KE43A	1.5KE43CA	36.80	40.90~45.20	1	59.3	25.6	1
1.5KE47A	1.5KE47CA	40.20	44.70~49.40	1	64.8	23.5	1
1.5KE51A	1.5KE51CA	43.60	48.50~53.60	1	70.1	21.7	1
1.5KE56A	1.5KE56CA	47.80	53.20~58.80	1	77.0	19.7	1
1.5KE62A	1.5KE62CA	53.00	58.90~65.10	1	85.0	17.9	1
1.5KE68A	1.5KE68CA	58.10	64.60~71.40	1	92.0	16.5	1
1.5KE75A	1.5KE75CA	64.10	71.30~78.80	1	103.0	14.8	1
1.5KE82A	1.5KE82CA	70.10	77.90~86.10	1	113.0	13.5	1
1.5KE91A	1.5KE91CA	77.80	86.50~95.50	1	125.0	12.2	1
1.5KE100A	1.5KE100CA	85.50	95.00~105.00	1	137.0	11.1	1
1.5KE110A	1.5KE110CA	94.00	105.00~116.00	1	152.0	10.0	1
1.5KE120A	1.5KE120CA	102.00	114.00~126.00	1	165.0	9.2	1
1.5KE130A	1.5KE130CA	111.00	124.00~137.00	1	179.0	8.5	1
1.5KE150A	1.5KE150CA	128.00	143.00~158.00	1	207.0	7.3	1
1.5KE160A	1.5KE160CA	136.00	152.00~168.00	1	219.0	6.9	1
1.5KE170A	1.5KE170CA	145.00	162.00~179.00	1	234.0	6.5	1

Part Number		Reverse Stand-Off Voltage	Breakdown Voltage @I_T	Test Current	Maximum Clamping Voltage @I_{PP}	Peak Pulse Current	Reverse Leakage @V_{RWM}
Unidirectional	Bidirectional	V_{RWM}(V)	V_{BR}(V)	I_T(mA)	V_C(V)	I_{PP}(A)	I_R(μA)
1.5KE180A	1.5KE180CA	154.00	171.00~189.00	1	246.0	6.2	1
1.5KE200A	1.5KE200CA	171.00	190.00~210.00	1	274.0	5.5	1
1.5KE220A	1.5KE220CA	185.00	209.00~231.00	1	328.0	4.6	1
1.5KE250A	1.5KE250CA	214.00	237.00~263.00	1	344.0	4.4	1
1.5KE300A	1.5KE300CA	256.00	285.00~315.00	1	414.0	3.7	1
1.5KE350A	1.5KE350CA	300.00	332.00~368.00	1	482.0	3.2	1
1.5KE400A	1.5KE400CA	342.00	380.00~420.00	1	548.0	2.8	1
1.5KE440A	1.5KE440CA	376.00	418.00~462.00	1	602.0	2.5	1
1.5KE480A	1.5KE480CA	408.00	456.00~504.00	1	658.0	2.3	1
1.5KE510A	1.5KE510CA	434.00	485.00~535.00	1	698.0	2.1	1
1.5KE530A	1.5KE530CA	450.00	503.50~556.50	1	725.0	2.1	1
1.5KE540A	1.5KE540CA	459.00	513.00~567.00	1	740.0	2.0	1
1.5KE550A	1.5KE550CA	467.00	522.50~577.50	1	760.0	2.0	1

Notes: For bidirectional type having V_{RWM} of 10V and less, the I_R limit is double.

Ratings and Characteristic Curves (T_A=25℃ unless otherwise noted)

Figure 1. Peak Pulse Power Rating Curve

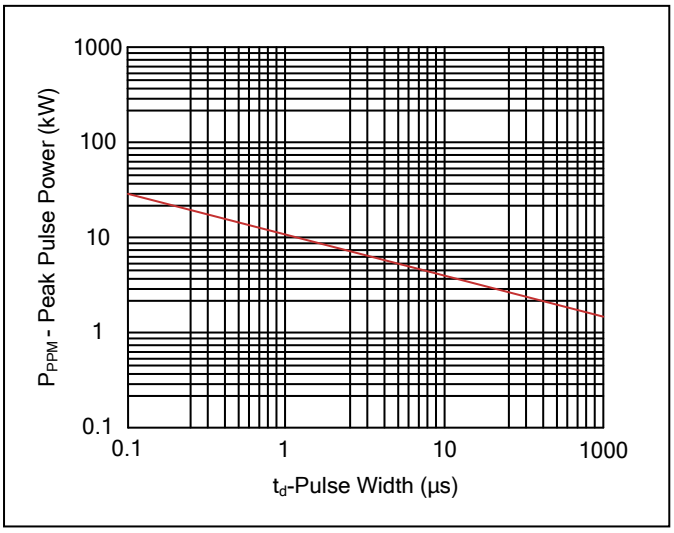

Figure 2. Pulse Derating Curve

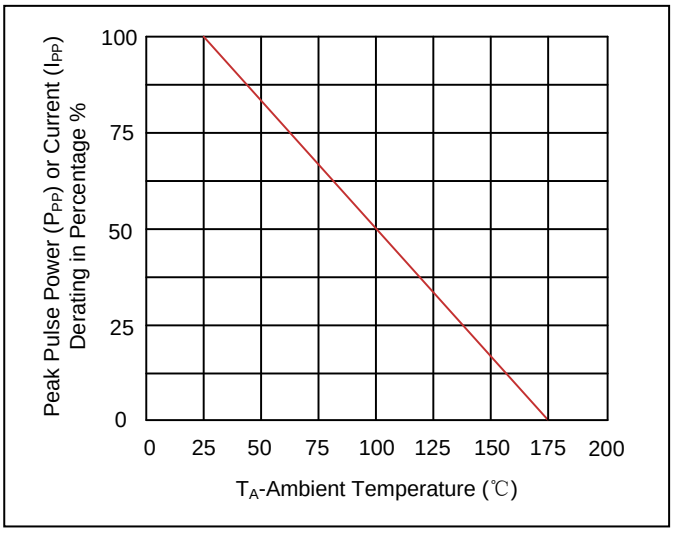

Figure 3. Pulse Waveform

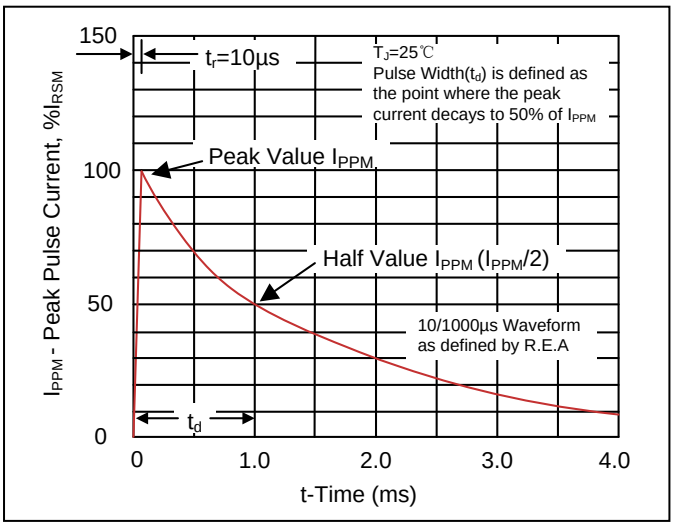

Figure 4. Typical Junction Capacitance

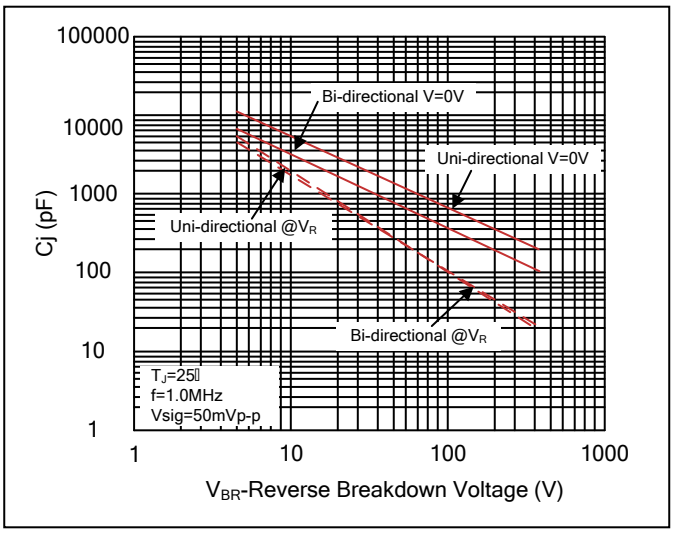

Figure 5. Steady State Power Dissipation Derating Curve

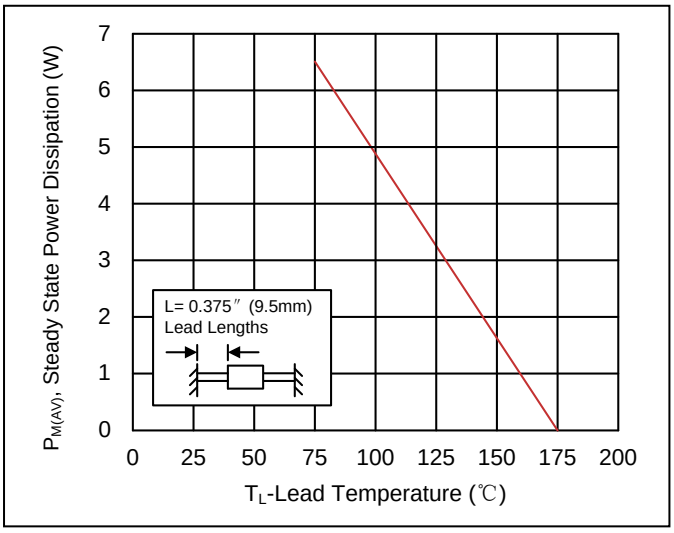

Figure 6. Maximum Non-Repetitive Forward Surge Current Uni-Directional Only

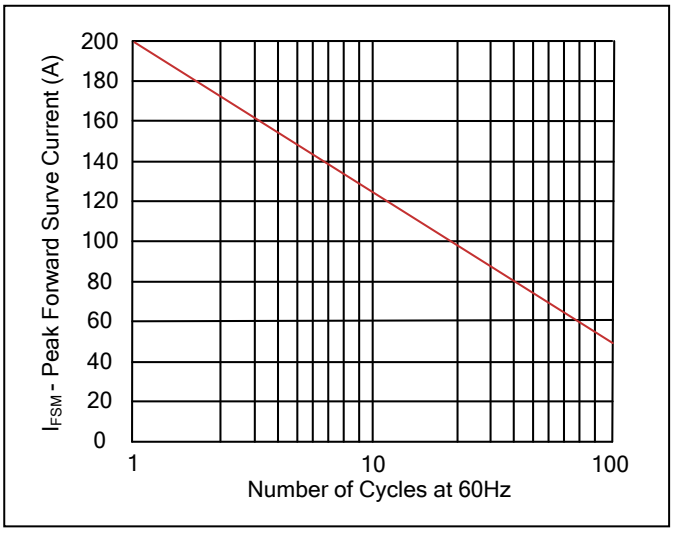

Recommended Soldering Conditions

Wave Soldering

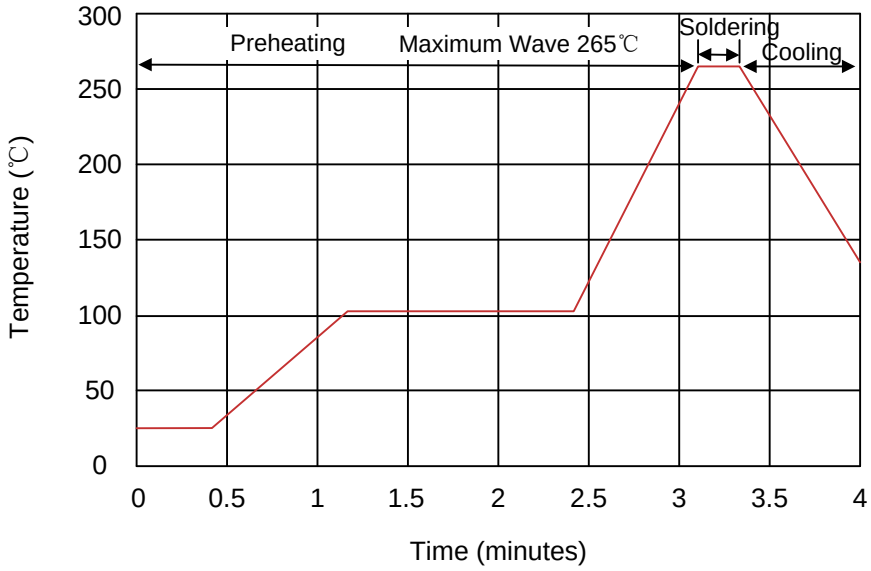

Item	Conditions
Peak Temperature	265℃
Dipping Time	10 seconds
Soldering	1 time

Marking Code

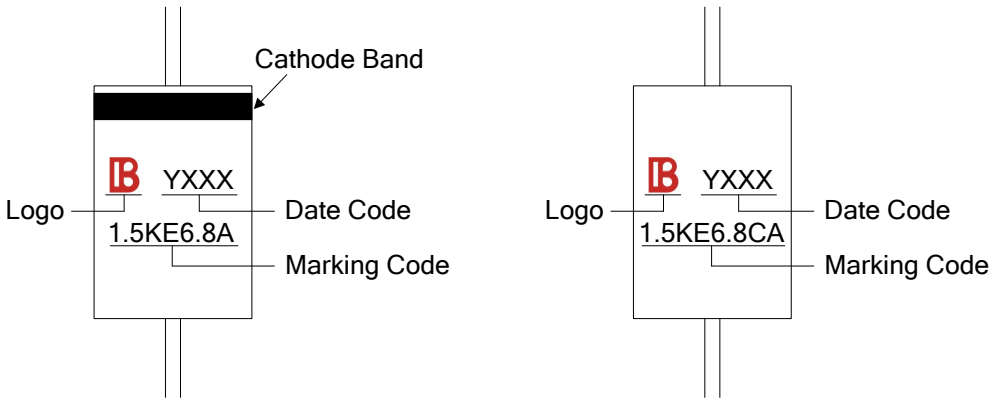

Packaging

Tape

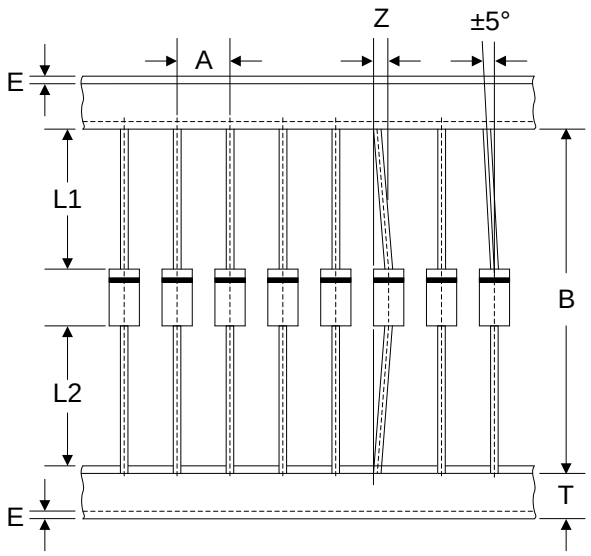

Symbol	Dimension (mm)
A	10.0±0.5
B	53.0±1.0
Z	1.2Max.
T	6.0±0.4
E	0.8Max.
L1-L2	1.0Max.

Box

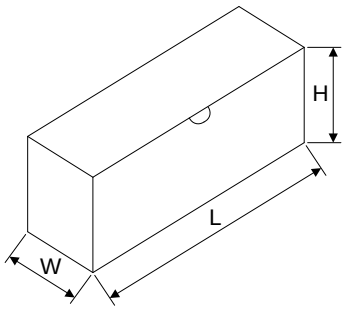

L	250.0±5.0
W	75.0±5.0
H	114.0±5.0
Quantity: 1000PCS	

Reel

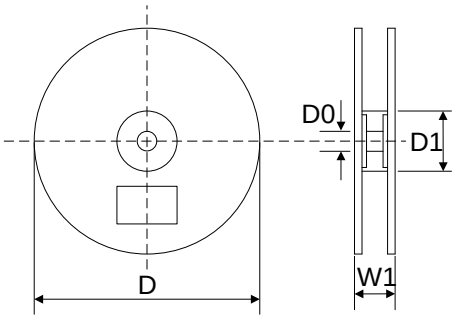

D	330.0±3.0
D0	16.4±2.0
D1	86.0±2.0
W1	76.0±3.0
Quantity: 1200PCS	

Компания «ЭлектроПласт» предлагает заключение долгосрочных отношений при поставках импортных электронных компонентов на взаимовыгодных условиях!

Наши преимущества:

- Оперативные поставки широкого спектра электронных компонентов отечественного и импортного производства напрямую от производителей и с крупнейших мировых складов;
- Поставка более 17-ти миллионов наименований электронных компонентов;
- Поставка сложных, дефицитных, либо снятых с производства позиций;
- Оперативные сроки поставки под заказ (от 5 рабочих дней);
- Экспресс доставка в любую точку России;
- Техническая поддержка проекта, помощь в подборе аналогов, поставка прототипов;
- Система менеджмента качества сертифицирована по Международному стандарту ISO 9001;
- Лицензия ФСБ на осуществление работ с использованием сведений, составляющих государственную тайну;
- Поставка специализированных компонентов (Xilinx, Altera, Analog Devices, Intersil, Interpoint, Microsemi, Aeroflex, Peregrine, Syfer, Eurofarad, Texas Instrument, Miteq, Cobham, E2V, MA-COM, Hittite, Mini-Circuits,General Dynamics и др.);

Помимо этого, одним из направлений компании «ЭлектроПласт» является направление «Источники питания». Мы предлагаем Вам помощь Конструкторского отдела:

- Подбор оптимального решения, техническое обоснование при выборе компонента;
- Подбор аналогов;
- Консультации по применению компонента;
- Поставка образцов и прототипов;
- Техническая поддержка проекта;
- Защита от снятия компонента с производства.

Как с нами связаться

Телефон: 8 (812) 309 58 32 (многоканальный)
Факс: 8 (812) 320-02-42
Электронная почта: org@eplast1.ru
Адрес: 198099, г. Санкт-Петербург, ул. Калинина, дом 2, корпус 4, литера А.