E3S-A

Be sure to read *Safety Precautions* on page 10.

Ordering Information

Built-in Amplifier Photoelectric Sensors

Red light Infrared light

Sensing method	Appearance	Connection method	Sensing distance	Functions	Model	
					NPN output	PNP output
Through-beam Sensors	Horizontal	Pre-wired	7 m	---	E3S-AT11	E3S-AT31
				Timer, Turbo, Self Diagnosis, External Diagnosis	E3S-AT21	E3S-AT41
		Connector (M12)		---	E3S-AT16	E3S-AT36
	Vertical	Pre-wired		---	E3S-AT61	E3S-AT81
				Timer, Turbo, Self Diagnosis, External Diagnosis	E3S-AT71	E3S-AT91
		Connector (M12)		---	E3S-AT66	E3S-AT86
Retro-reflective Sensors	Horizontal	Pre-wired	2 m (100 mm) *1	---	E3S-AR11	E3S-AR31
				Timer, Turbo, Self Diagnosis, External Diagnosis	E3S-AR21	E3S-AR41
		Connector (M12)		---	E3S-AR16	E3S-AR36
	Vertical	Pre-wired		---	E3S-AR61	E3S-AR81
				Timer, Turbo, Self Diagnosis, External Diagnosis	E3S-AR71	E3S-AR91
		Connector (M12)		---	E3S-AR66	E3S-AR86

(c)Copyright OMRON Corporation 2008 All Rights Reserved.

Sensing method	Appearance	Connection method	Sensing distance	Functions	Model	
					NPN output	PNP output
Diffuse-reflective Sensors	Horizontal	Pre-wired	100 mm (wide view)	---	E3S-AD13 *2	E3S-AD33
				Timer Self Diagnosis	E3S-AD23	E3S-AD43
			200 mm	---	E3S-AD11	E3S-AD31
				Timer Turbo Self Diagnosis	E3S-AD21	E3S-AD41
			700 mm	---	E3S-AD12	E3S-AD32
				Timer Turbo Self Diagnosis	E3S-AD22	E3S-AD42
		Connector (M12)	100 mm (wide view)	---	E3S-AD18	E3S-AD38
			200 mm		E3S-AD16	E3S-AD36
			700 mm		E3S-AD17	E3S-AD37
	Vertical	Pre-wired	100 mm (wide view)	---	E3S-AD63 *2	E3S-AD83
				Timer Self Diagnosis	E3S-AD73	E3S-AD93
			200 mm	---	E3S-AD61	E3S-AD81
				Timer Turbo Self Diagnosis	E3S-AD71	E3S-AD91
			700 mm	---	E3S-AD62	E3S-AD82
				Timer Self Diagnosis	E3S-AD72	E3S-AD92
		Connector (M12)	100 mm (wide view)	---	E3S-AD68	E3S-AD88
			200 mm		E3S-AD66	E3S-AD86
			700 mm		E3S-AD67	E3S-AD87

*1. Values in brackets are the minimum required distance between the Sensor and Reflector.
*2. The following models are available with 200-mm sensing distances: E3S-AD14 and E3S-AD64.

Accessories (Order Separately)

Insert-type Long Slit

Slit width	Sensing distance	Minimum sensing object (typical)	Model	Quantity	Remarks
0.5 mm × 11.1 mm	500 mm	0.2-mm dia.	E39-S46	1 of each for Emitter/ Receiver (4 Slits total)	Slits can be used with the E3S-AT□□ Through-beam Sensor.➜Page 10
1 mm × 11.1 mm	1.1 m	0.4-mm dia.			
2 mm × 13.6 mm	2.5 m	0.8-mm dia.		1 of each for Emitter/ Receiver (2 Slits total)	

Mutual Interference Prevention Filters

Sensing distance	Model	Quantity	Remarks
2.4 m	E39-E6	2 of each for Emitter/Receiver (4 Filters total)	Can be used with the E3S-AT□□ Through-beam Sensor. ➜ Page 11

Reflectors/Other Accessories

Name	Sensing distance (typical)	Model	Quantity	Remarks
Reflectors	2 m (100 mm) * (rated value)	E39-R1	1	Provided with E3S-AR□□ Retro-reflective Sensor.
Small Reflectors	1.3 m (100 mm) *	E39-R3	1	---
	600 mm (70 mm) *	E39-R4	1	---
Tape Reflectors	450 mm (100 mm) *	E39-RS1	1	Enables MSR function.
	700 mm (100 mm) *	E39-RS2	1	
	900 mm (100 mm) *	E39-RS3	1	
Optical Axis Confirmation Reflector	---	E39-R5	1	Used to check optical axis for the E3S-AT□□ Through-beam Sensor.

Note: When using any Reflector other than the provided one, use a sensing distance of approximately 0.7 times the typical value as a guide.
*Values in brackets are the minimum required distance between the Sensor and Reflector.

(c)Copyright OMRON Corporation 2008 All Rights Reserved.

Mounting Brackets/Other

Appearance	Model	Quantity	Remarks
	E39-L69	1	Provided with E3S-A Horizontal Sensors.
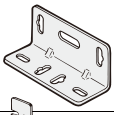	**E39-L70**	1	Provided with E3S-A Vertical Sensors.
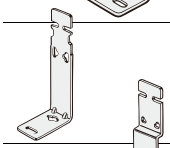	**E39-L59**	1	Provided with E3S-A Vertical Pre-wired Sensors.
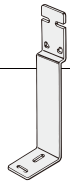	**E39-L81**	1	Provided with E3S-A Vertical Connector Sensors.
	E39-L97	1	Protective Cover for Horizontal Sensors Note: When mounting Sensors with Connectors, the Sensor I/O Connector will come into contact with the Bracket. Mount the Sensor with care.
	E39-L98	1	Protective Cover for Vertical Sensors Note: When mounting Sensors with Connectors, the Sensor I/O Connector will be longer. Mount the Sensor with care.
	E39-L60	1	Close Mounting Plate: Provided with E3S-A Connector Sensors.

Note: If a Through-beam Model is used, order two Mounting Brackets, one for the Emitter and one for the Receiver.

Sensors I/O Connectors

Model	Quantity	Remarks
E39-G2	1	Provided with product.

Sensors I/O Connectors

Cable	Appearance	Cable type		Model
Standard	Straight	2 m	3-wire	**XS2F-D421-DC0-A**
		5 m		**XS2F-D421-GC0-A**
	L-shaped	2 m		**XS2F-D422-DC0-A**
		5 m		**XS2F-D422-GC0-A**

(c)Copyright OMRON Corporation 2008 All Rights Reserved.

Ratings and Specifications

Item \ Model		E3S-AT11, 16, 21, 31, 36, 41, 61, 66, 71, 81, 86, 91	E3S-AR11, 16, 21, 31, 36, 41, 61, 66, 71, 81, 86, 91	E3S-AD13, 18, 23, 33, 38, 43, 63, 68, 73, 83, 88, 93	E3S-AD11, 16, 21, 31, 36, 41, 61, 66, 71, 81, 86, 91	E3S-AD12, 17, 22, 32, 37, 42, 62, 67, 72, 82, 87, 92
Sensing method		**Through-beam Sensors**	**Retro-reflective Sensors (with MSR function)**	**Diffuse-reflective Sensors**		
Sensing distance		7 m	2 m (100 mm) *1 (When using E39-R1)	100 mm (wide view) (white paper 100 × 100 mm)	10 to 200 mm (white paper 100 × 100 mm)	700 mm (white paper 200 × 200 mm)
Standard sensing object		Opaque: 10-mm dia. min.	Opaque: 75-mm dia. min.	---		
Differential travel		---		20% max. of sensing distance	10% max. of sensing distance	20% max. of sensing distance
Directional angle		Both Emitter and Receiver: 3° to 15°	3 to 10°	---		
Light source (wavelength)		Red LED (700 nm)		Infrared LED (880 nm)	Red LED (700 nm)	Infrared LED (880 nm)
Power supply voltage		10 to 30 VDC, including ripple (p-p) 10%				
Current consumption		Both Emitter and Receiver: 20 mA max. (plus approx. 15 mA with turbo function)	30 mA max. (plus approx. 15 mA with turbo function)	35 mA max.	30 mA max. (plus approx. 15 mA with turbo function)	35 mA max.
Control output		Load power supply voltage: 30 VDC max., Load current: 100 mA max. (residual voltage: 1 V max.) Open-collector output (NPN or PNP depending on model), Light-ON/Dark-ON selectable				
Self-diagnostic output (Only on Sensors with self-diagnostic outputs)		(Only Sensors with self-diagnostic function) Load power supply voltage: 30 VDC max., Load current: 50 mA max. (residual voltage: 1 V max.), Open-collector output (NPN or PNP depending on model)				
External diagnostic input (Only on Sensors with external diagnostic outputs)	**Input voltage**	NPN with Emitter OFF: 0 V short-circuit or 1.5 V max. (source current: 1 mA max.) with Emitter ON: Open (leakage current: 0.1 mA max.) PNP with Emitter OFF: +DC short-circuit or −1.5 VDC max. (sink current: 3 mA max.) with Emitter ON: Open (leakage current: 0.1 mA max.)		---		
	Response time	0.5 ms max.				
Protection circuits		Power supply reverse polarity protection, Output short-circuit protection	Power supply reverse polarity protection, Output short-circuit protection, Mutual interference prevention			
Response time		Operation or reset: 0.5 ms max.				
Sensitivity adjustment		Two-turn endless adjuster with an indicator				
Timer function (Only on Sensors with the timer function)		0 to 100 ms OFF-delay variable adjuster				
Turbo function (Only on Sensors with the turbo function)		Yes (with turbo switch)				---
Ambient illumination (Receiver side)		Incandescent lamp: 5,000 lx max. Sunlight: 10,000 lx max.				
Ambient temperature		Operating: −25°C to 55°C (with no icing or condensation) Storage: −40°C to 70°C (with no icing or condensation)				
Ambient humidity		Operating: 35% to 85% (with no condensation) Storage: 35% to 95% (with no condensation)				
Insulation resistance		20 MΩ min. at 500 VDC between current-carrying parts and case				
Dielectric strength		1,000 VAC, 50/60 Hz for 1 min. between current-carrying parts and case				
Vibration resistance (destruction)		10 to 55 Hz, 1.5-mm double amplitude for 2 hours each in X, Y, and Z directions				
Shock resistance (destruction)		Destruction: 500m/s^2, 3 times each in X, Y, and Z directions				
Degree of protection		IEC IP67; NEMA: 4X (indoors only) *2				
Connection method		Pre-wired (standard length: 2 m) or M12 connector				
Weight (packed state)		Pre-wired cable: Approx. 150 g Connector: Approx. 70 g	Pre-wired cable: Approx. 110 g Connector: Approx. 60 g	Pre-wired cable: Approx. 90 g Connector: Approx. 50 g		
Material	**Case**	PBT				
	Lens	Denatured polyallylate				
	Mounting Bracket	Stainless steel (SUS304)				
Accessories		Mounting bracket (with screws), Sensitivity adjustment driver, Sensitivity adjusting knob, Instruction sheet, Close mounting plate (only for Sensors with connectors), and Reflector (only for Retro-reflective Sensors)				

*1. Values in brackets are the minimum required distance between the Sensor and Reflector.
*2. National Electrical Manufacturers Association

(c)Copyright OMRON Corporation 2008 All Rights Reserved.

Engineering Data (Typical)

Parallel Sensing Range

Through-beam Sensors
E3S-AT□□

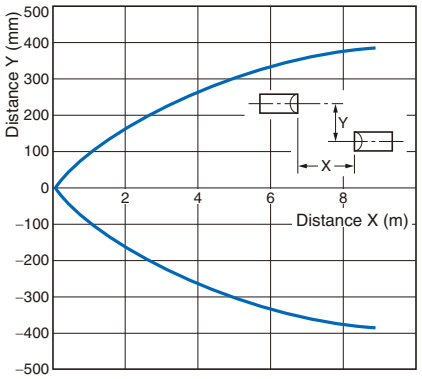

Through-beam Sensors
E3S-AT□□ + E39-S46
(Slit Sold Separately)

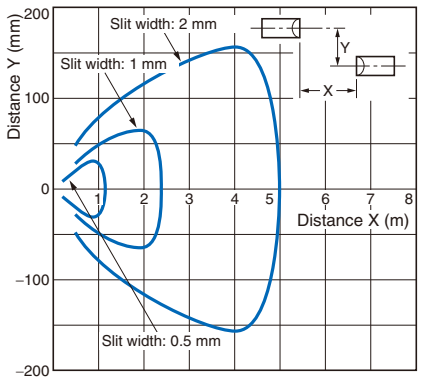

Through-beam Sensors
E3S-AT□□ + E39-E6
(Filter Sold Separately)

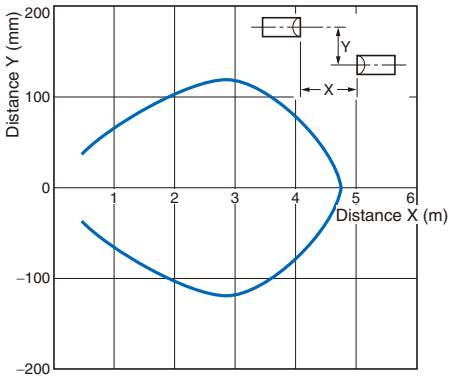

Parallel Sensing Range

Retro-reflective Sensors
E3S-AR□□ + E39-R1 (with Reflector)

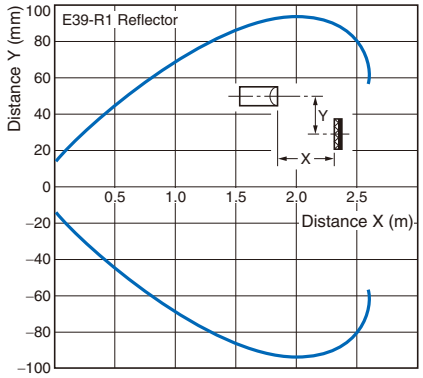

Sensing Range

Diffuse-reflective Sensors
E3S-AD□1/AD□2/AD□3/AD□6/AD□7/AD□8

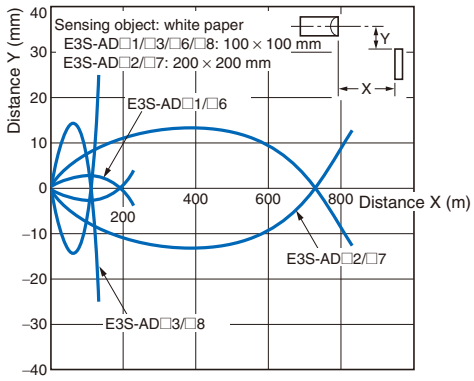

Excess Gain vs. Set Distance

Through-beam Sensors
E3S-AT□□

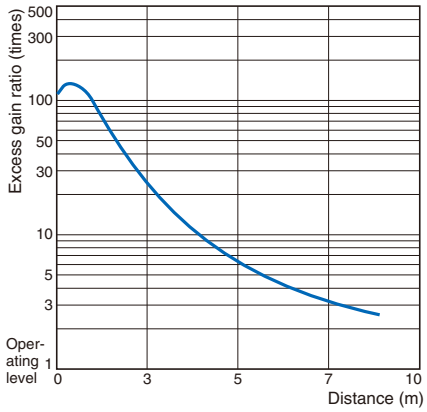

Retro-reflective Sensors
E3S-AR□□ + E39-R1 (with Reflector)

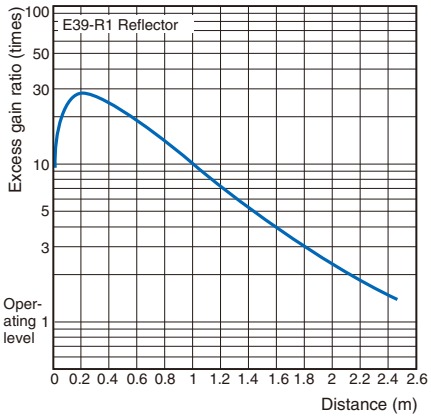

(c)Copyright OMRON Corporation 2008 All Rights Reserved.

Diffuse-reflective Sensor

E3S-AD□1/AD□2/AD□3/AD□6/AD□7/AD□8 (Detection of White Paper)

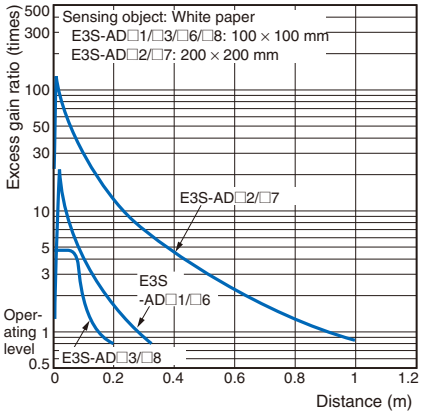

Diffuse-reflective Sensor

E3S-AD□1/AD□2/AD□3/AD□6/AD□7/AD□8 (Detection of Black Paper)

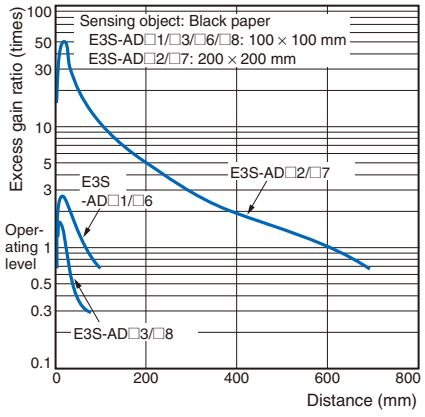

Sensing Object Size vs. Sensing Distance

E3S-AD□1/AD□2/AD□3/AD□6/AD□7/AD□8

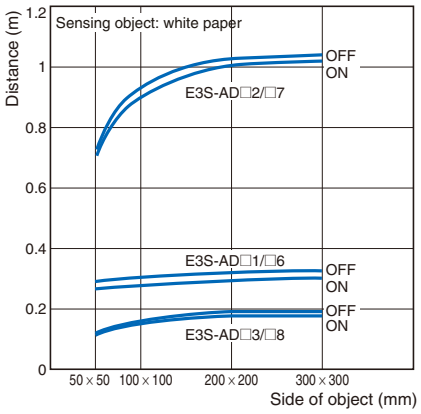

I/O Circuit Diagrams

NPN Output

Model	Operation mode	Timing charts	Mode selector switch	Output circuit
E3S-AT11 E3S-AT16 E3S-AT61 E3S-AT66 E3S-AR11 E3S-AR16 E3S-AR61 E3S-AR66	Light-ON	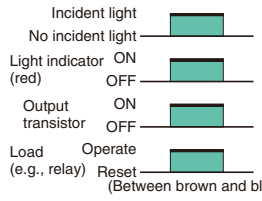	L Side (LIGHT ON)	Through-beam Receivers, Retro-reflective Sensors, Diffuse-reflective Sensors 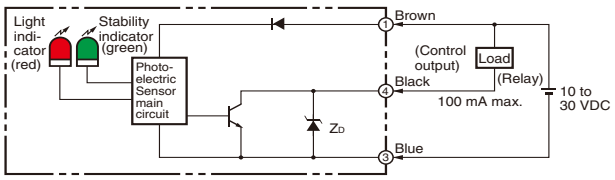 **Connector Pin Arrangement** Note: Pin 2 is not used.
E3S-AD11 E3S-AD16 E3S-AD61 E3S-AD66 E3S-AD12 E3S-AD17 E3S-AD62 E3S-AD67 E3S-AD13 E3S-AD18 E3S-AD63 E3S-AD68	Dark-ON	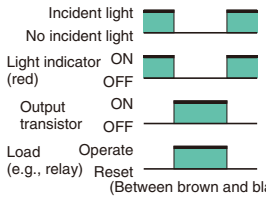	D Side (DARK ON)	
	Through-beam Emitters			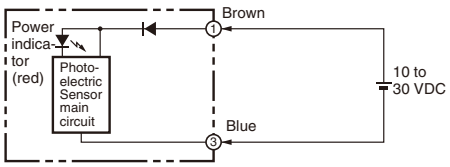 **Connector Pin Arrangement** Note: Pins 2 and 4 are not used.

(c)Copyright OMRON Corporation 2008 All Rights Reserved.

Model	Operation mode	Timing charts	Mode selector switch	Output circuit
E3S-AT21 E3S-AT71 E3S-AD21 E3S-AD71 E3S-AD22 E3S-AD72 E3S-AD23 E3S-AD73	Light-ON	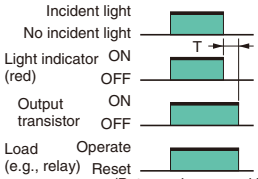 T: OFF-delay timer (0 to 100 ms)	L Side (LIGHT ON)	Through-beam Receivers, Diffuse-reflective Sensors 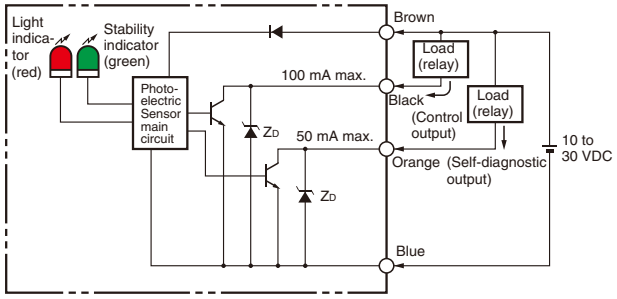
	Dark-ON	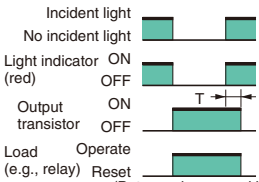 T: OFF-delay timer (0 to 100 ms)	D Side (DARK ON)	
	---	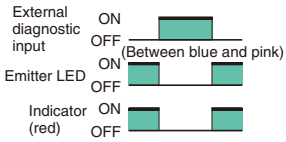	---	Through-beam Emitters 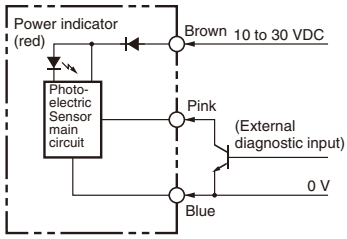
E3S-AR21 E3S-AR71	Light-ON	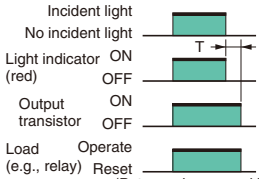 T: OFF-delay timer (0 to 100 ms)	L Side (LIGHT ON)	Retro-reflective Sensors 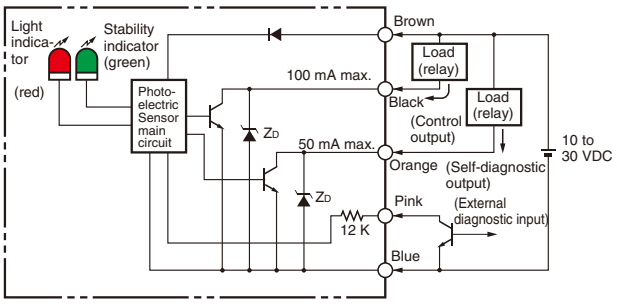
	Dark-ON	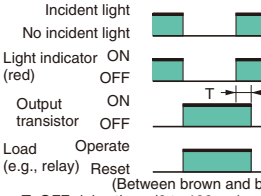 T: OFF-delay timer (0 to 100 ms)	D Side (DARK ON)	

Structure of Sensor I/O Connector

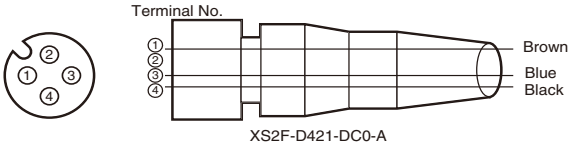

Classification	Wire color	Connection Pin No.	Application
For DC	Brown	1	+V
	---	2	---
	Blue	3	0 V
	Black	4	Output

Note: Pin No. 2 is not used.

(c)Copyright OMRON Corporation 2008 All Rights Reserved.

PNP Output

<table>
<tr><th>Model</th><th>Operation mode</th><th>Timing charts</th><th>Mode selector switch</th><th>Output circuit</th></tr>
<tr><td>E3S-AT31
E3S-AT36
E3S-AT81
E3S-AT86

E3S-AR31
E3S-AR36
E3S-AR81
E3S-AR86</td><td>Light-ON</td><td> 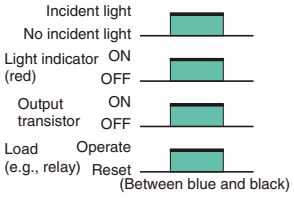
</td><td>L Side
(LIGHT ON)</td><td rowspan="2">Through-beam Receivers, Retro-reflective Sensors, Diffuse-reflective Sensors
 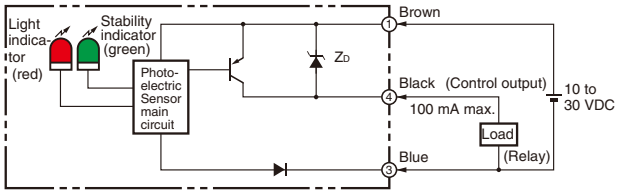

Connector Pin Arrangement

Note: Pin 2 is not used.</td></tr>
<tr><td>E3S-AD31
E3S-AD36
E3S-AD81
E3S-AD86
E3S-AD32
E3S-AD37
E3S-AD82
E3S-AD87
E3S-AD33
E3S-AD38
E3S-AD83
E3S-AD88</td><td>Dark-ON</td><td> 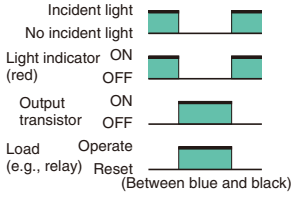
</td><td>D Side
(DARK ON)</td></tr>
<tr><td colspan="2">Through-beam Model Emitters</td><td colspan="2"> 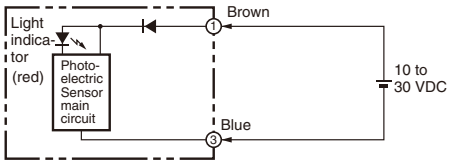

Connector Pin Arrangement

Note: Pins 2 and 4 are not used.</td></tr>
<tr><td rowspan="3">E3S-AT41
E3S-AT91

E3S-AD41
E3S-AD91
E3S-AD42
E3S-AD92
E3S-AD43
E3S-AD93</td><td>Light ON</td><td> 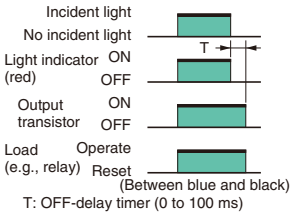
</td><td>L Side
(LIGHT ON)</td><td rowspan="2">Through-beam Receivers, Diffuse-reflective Sensors
 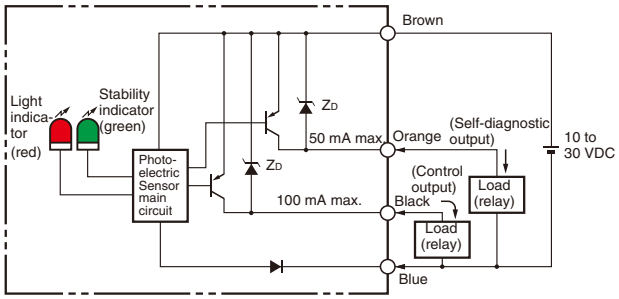
</td></tr>
<tr><td>Dark ON</td><td> 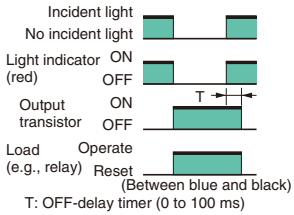
</td><td>D Side
(DARK ON)</td></tr>
<tr><td>---</td><td> 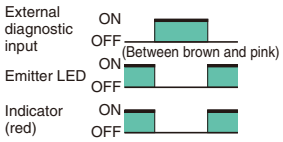
</td><td>---</td><td>Through-beam Emitters
 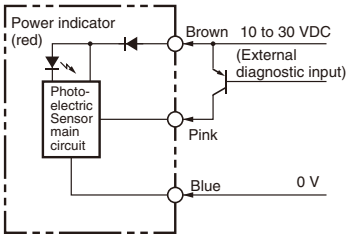
</td></tr>
</table>

(c)Copyright OMRON Corporation 2008 All Rights Reserved.

Model	Operation mode	Timing charts	Mode selector switch	Output circuit
E3S-AR41 E3S-AR91	Light-ON	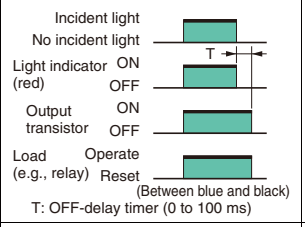 T: OFF-delay timer (0 to 100 ms)	L Side (LIGHT ON)	Retro-reflective Sensors 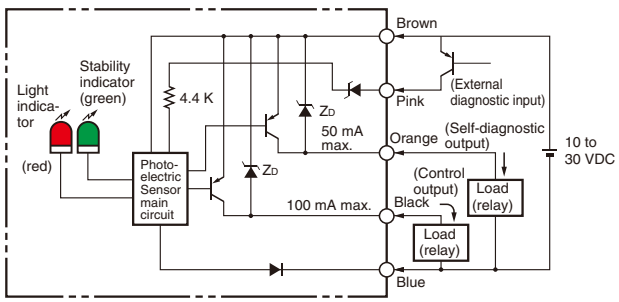
	Dark-ON	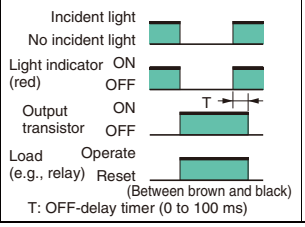 T: OFF-delay timer (0 to 100 ms)	D Side (DARK ON)	

Structure of Sensor I/O Connector

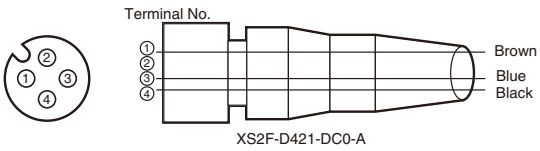

Classification	Wire color	Connection Pin No.	Application
For DC	Brown	1	+V
	---	2	---
	Blue	3	0 V
	Black	4	Output

Note: Pin 2 is not used.

Adjustment Methods

Sensitivity Adjustment for Diffuse-reflective Sensors Set to Light ON

Item	Sensing condition	Sensitivity adjuster	Indicators	Procedure
1) Position A	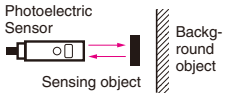	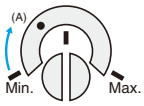	ON → **OFF**: Stability indicator (green) OFF → **ON**: Light indicator (red)	Locate a sensing object at the sensing distance, set the sensitivity adjuster to the minimum scale position, and gradually increase sensitivity by turning the sensitivity adjuster clockwise until the incident light indicator (red LED) is ON. Position A is where the indicator has turned ON.
2) Position B	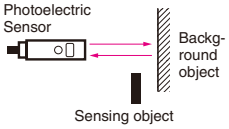	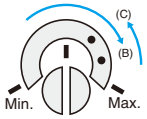	ON → **OFF**: Stability indicator (green) ON → **OFF**: Light indicator (red)	Position B is when the sensing object is removed and the sensitivity adjuster is turned clockwise until the incident light indicator (red LED) is ON. Position C is where the adjuster is turned counterclockwise (reducing the sensitivity) from position B until the incident light indicator (red LED) is OFF. When there are no background objects, the maximum sensitivity is position C.
3) Setting	---	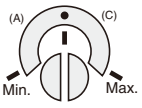	**ON**: Stability indicator (green) ON → **OFF**: Light indicator (red)	Set the sensitivity adjuster to halfway between (A) and (C) (at the optimum sensitivity). Check that the stability indicator (green LED) turns ON according to whether the sensing object is there or not. There is not sufficient margin if it does not turn ON. If this is the case, reconsider the detection method.

Unlike conventional Photoelectric Sensors, the variation in the sensitivity of E3S-A Photoelectric Sensors is minimal. This means the sensitivity can be adjusted on only a single Photoelectric Sensor, and then the adjusters on the other Photoelectric Sensors can be set to the same scale position. There is no need to adjust the sensitivity of each Photoelectric Sensor individually.

(c)Copyright OMRON Corporation 2008 All Rights Reserved.

Safety Precautions

⚠ WARNING

This product is not designed or rated for ensuring safety of persons.
Do not use it for such purposes.

Precautions for Correct Use

Do not use the product in atmospheres or environments that exceed product ratings.

Mounting

Position of Optical Axis of Through-beam Model

Unlike conventional through-beam sensors, the E3S-A Through-beam Photoelectric Sensor incorporates 2 lenses. The lens actually in use is the one marked with an arrow indicating the position of the optical axis. When using a Slit, attach it to the lens marked with the arrow.

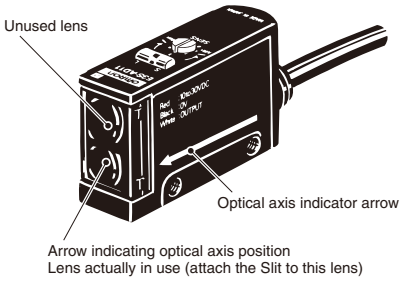

Position of Arrow Indicating Optical Axis

Model	Position of lens in use
E3S-A (Vertical Sensors)	Top
E3S-A (Horizontal Sensors)	Bottom

Tightening the Connector

Manually tighten the connector until the threads have completely disappeared. If tightening is insufficient, the degree of protection may not be maintained, or the connector may become loose when it is subjected to vibration. Using pliers to tighten the connector may damage it.

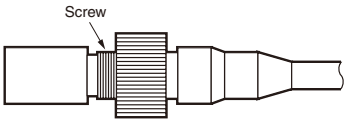

Use the E39-L60 Close Mounting Plate (provided) if the Sensor is mounted using mounting brackets or if it is mounted directly. (Refer to *Dimensions*.)

Mounting Bracket (Provided)

The direction of the optical axis coincides with the machine axis of the E3S-A when the mounting screw is inserted into the lock hole of the Mounting Bracket. If the mounting surface and the screw hole are correctly aligned toward the sensing object (or toward the Retroreflector for a Through-beam Sensor), the mechanical axis and optical axis will be aligned when the screw is inserted into the hole. Incident light will be detected, and time-consuming adjustment will not be necessary. (If, however, the mounting surface is not flat, adjustment of the optical axis may still be required.)
Adjust the position of the Sensor so that incident light points at the center. Make sure that the incident light is at a fixed position.
The maximum tightening torque of the screw is 0.53 N.m max.

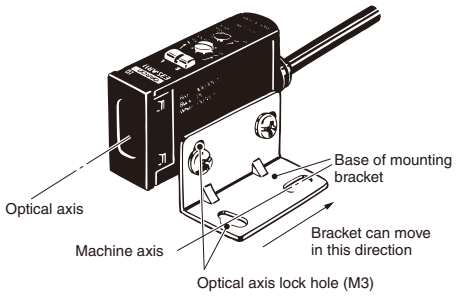

● Adjustments

E39-S46 Through-beam Slits

(Accessory, order separately)
Use the rubber attachment with the metal cover if a slit width of 2 mm is required. (A Slit is not required in this case.) Insert the 0.5- or 1-mm Slit between the metal cover and rubber attachment if a slit width of 0.5 or 1 mm is desired.
These Slits fit into the rubber attachment.

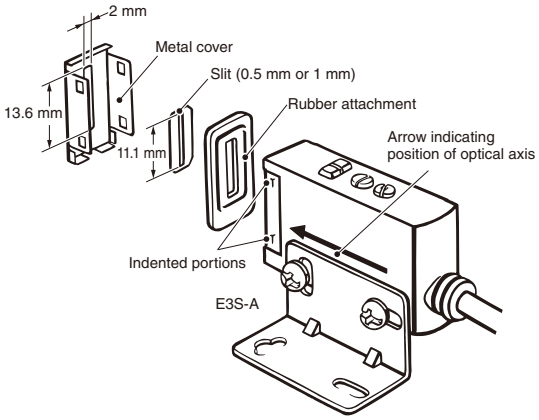

Apply the Slit to the lens of the Photoelectric Sensor marked with an arrow indicating the position of the optical axis (apply it to the bottom lens of Horizontal Sensors and the top lens of Vertical Sensors).

(c)Copyright OMRON Corporation 2008 All Rights Reserved.

E39-E6 Polarized Mutual Interference Prevention Filters for Through-beam Sensors

(Accessory, order separately)

- A set of 4 Filters are sold together for two Through-beam Sensors (for 2 each for Emitters and Receivers). Order one for every two sets of Photoelectric Sensors.
- For mounting, refer to the figure of the Through-beam Slits.

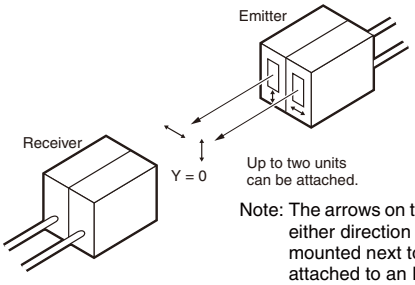

Note: The arrows on the Filters can be attached in either direction when two Sensors are mounted next to each other. The Filter attached to an Emitter and to the corresponding Receiver must be the same in direction of polarization or the Sensor will not function.

- The arrow printed on the cover indicates the direction of polarization. By attaching the Filters opposite to each other in polarization to the Emitters and the Receivers in rows, mutual interference can be prevented (in any case, the Filter attached to an Emitter and to the corresponding Receiver must be the same in direction of polarization or the Photoelectric Sensor will not function).

Operating Mode Selection

As shown in the following illustration, the E3S-A has an operating mode selector on the panel where the Receiver connector is located.

With this operating mode selector, the E3S-A is in either Dark-ON or Light-ON mode.

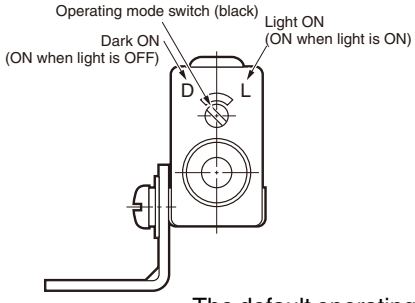

The default operating mode is shown in the following table.

Sensing method	Default switch setting
Through-beam Sensors Retro-reflective Sensors	Dark-ON
Diffuse-reflective Sensors	Light-ON

Timer and Turbo Switch

The Emitter of the Through-beam Sensor with the self-diagnostic feature incorporates a turbo switch. When this switch is ON, the intensity of the red LED light source can be increased to make a brighter spot.

Turbo Function (Turbo Switch)

The turbo function is effective with the turbo switch pressed, and the function is reset automatically when released.

With the turbo function switched ON, the light spot is visible even at a distance of 200 mm, making it easy to check the sensing position and the angle of the optical axis.

Precautions

(1)Do not keep the turbo switch pressed for longer than 3 minutes. (It will not break even if it is pressed for an extended period.)

(2)Pressing the switch may change the timer delay settings. Set the timer after using the turbo function to check the optical axis.

(3)To press the switch, use a force of 9.8 N max.

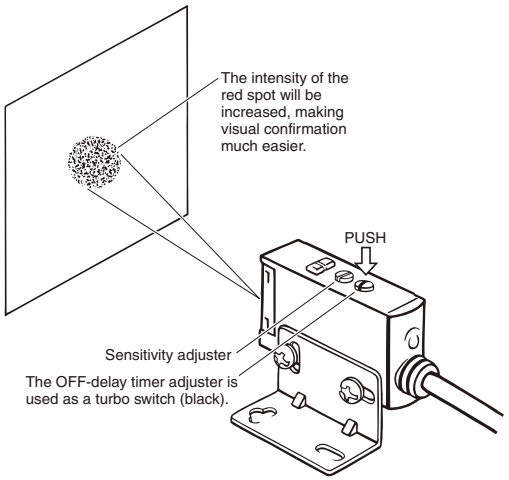

Using the E39-R5 Optical Axis Reflector for Through-beam Sensors

(Accessory, order Separately)

Use this attachment when the set distance is long and adjustment is mechanically difficult with a sensing object.

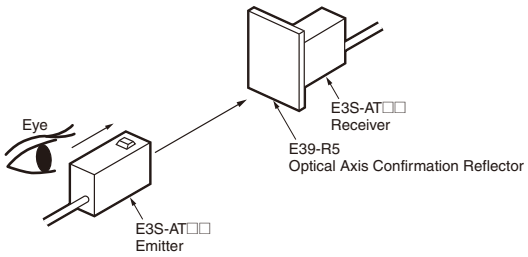

- Attach the Reflector to the Receiver.
- Look at the Reflector from right behind the Emitter. The Reflector should be bright with red light when the optical beam strikes the Reflector. If the Emitter has a turbo function, the Reflector looks brighter with the function switched ON.
- When the Reflector is removed, the light beam strikes the Receiver.

(c)Copyright OMRON Corporation 2008 All Rights Reserved.

(Unit: mm)

Dimensions

Unless otherwise specified, the tolerance class IT16 is used for dimensions in this data sheet.

E3S-A Built-in Amplifier Photoelectric Sensor

Through-beam Sensors (Horizontal)

Pre-wired Sensors

E3S-AT11/21/31/41 (Receiver)

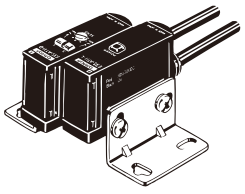

Emitter: E3S-AT□□-L
Receiver: E3S-AT□□-D

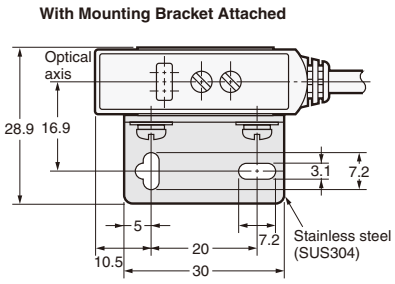

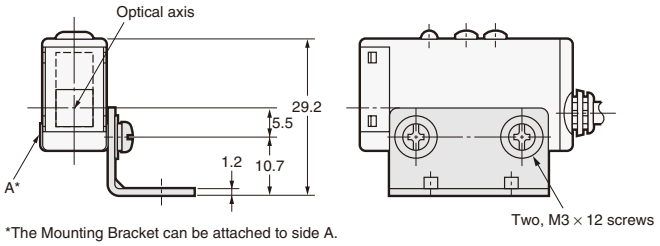

*The Mounting Bracket can be attached to side A.

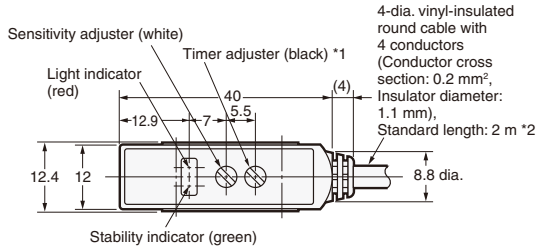

*1. Not applicable to Sensors with timer adjusters (E3S-AT11 and E3S-AT31).
*2. The E3S-AT11 or E3S-AT31 has three conductors.

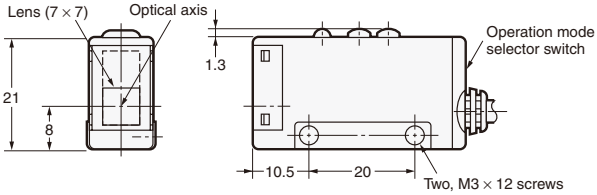

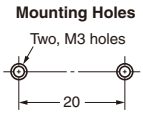

E3S-AT11/31 (Emitter)

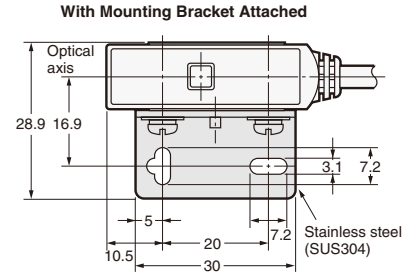

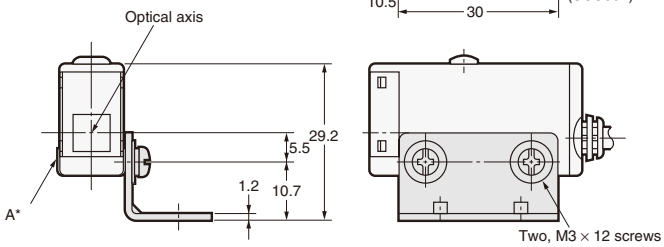

*The Mounting Bracket can be attached to side A.

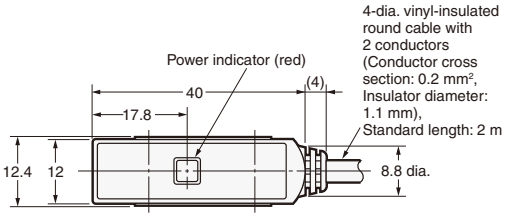

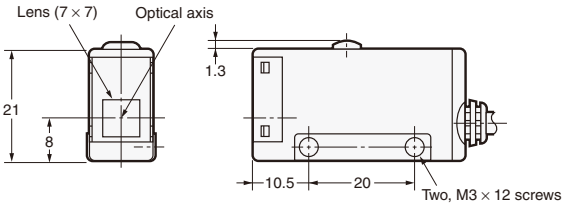

E3S-AT21/41(Emitter)

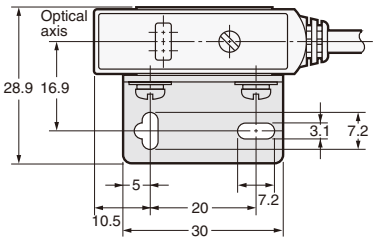

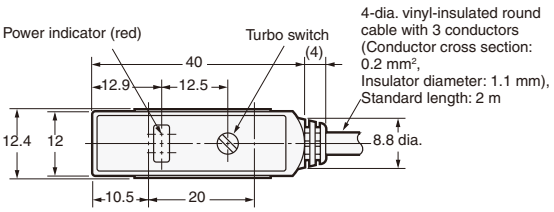

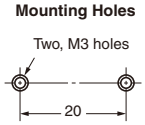

(c)Copyright OMRON Corporation 2008 All Rights Reserved.

Sensors with Standard Connectors

E3S-AT16/36 (Receiver)

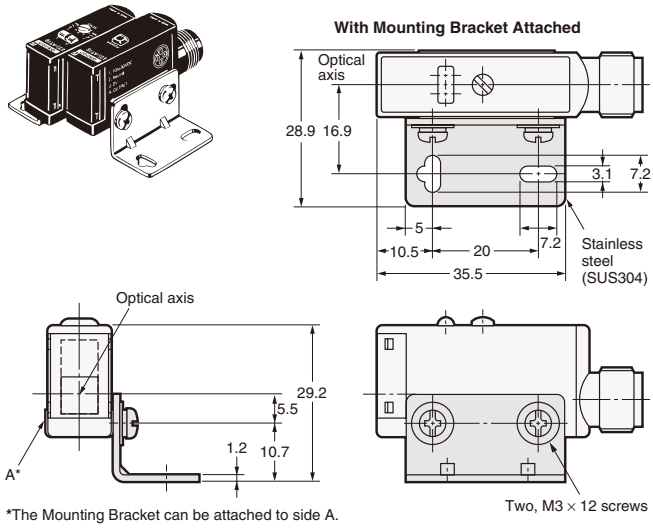

*The Mounting Bracket can be attached to side A.

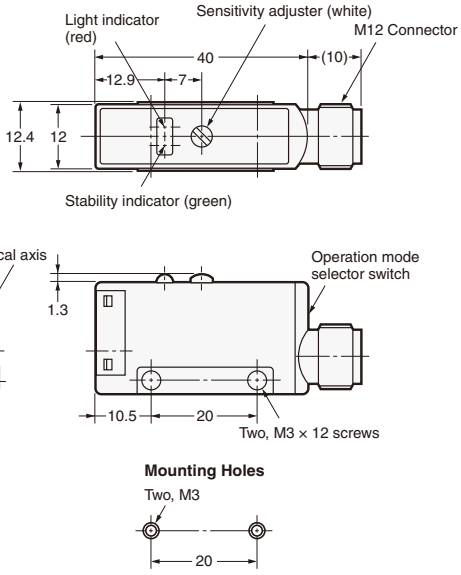

E3S-AT16/36 (Emitter)

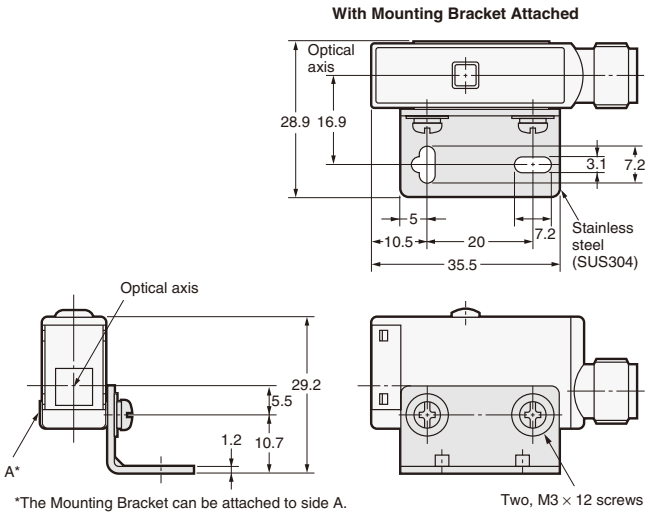

*The Mounting Bracket can be attached to side A.

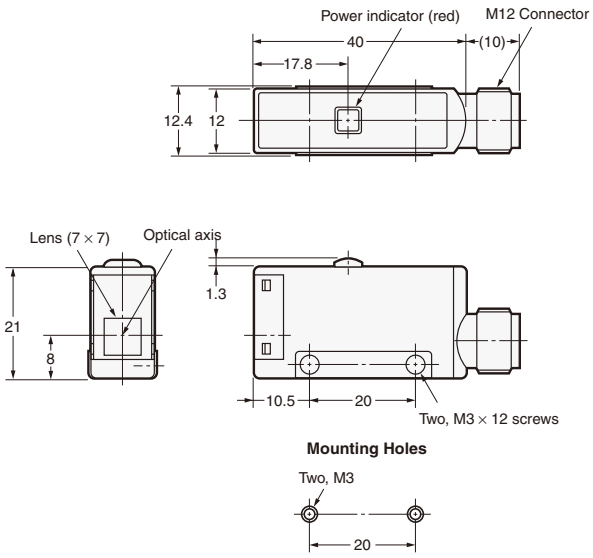

(c)Copyright OMRON Corporation 2008 All Rights Reserved.

Through-beam Sensors (Vertical)

Pre-wired Sensors

E3S-AT61/71/81/91 (Receiver)

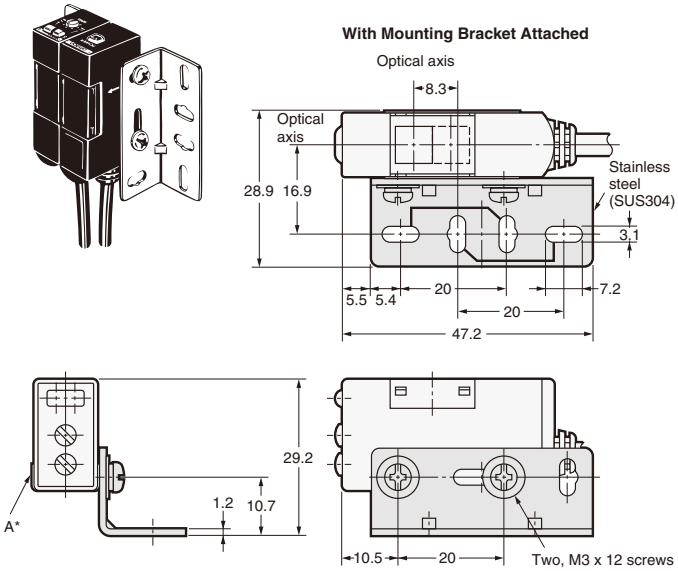

*The Mounting Bracket can be attached to side A.

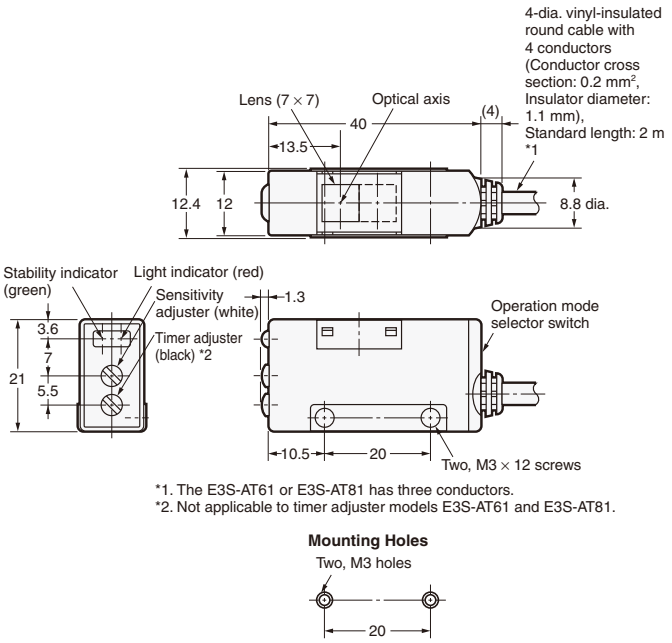

*1. The E3S-AT61 or E3S-AT81 has three conductors.
*2. Not applicable to timer adjuster models E3S-AT61 and E3S-AT81.

Mounting Holes

E3S-AT61/81 (Emitter)

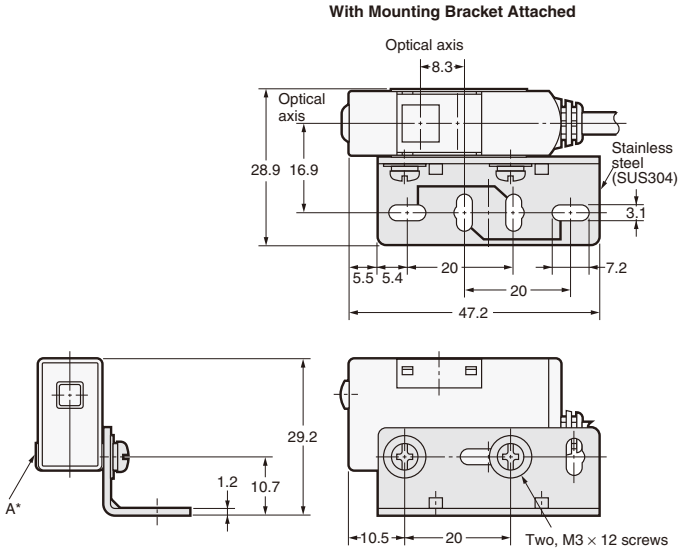

*The Mounting Bracket can be attached to side A.

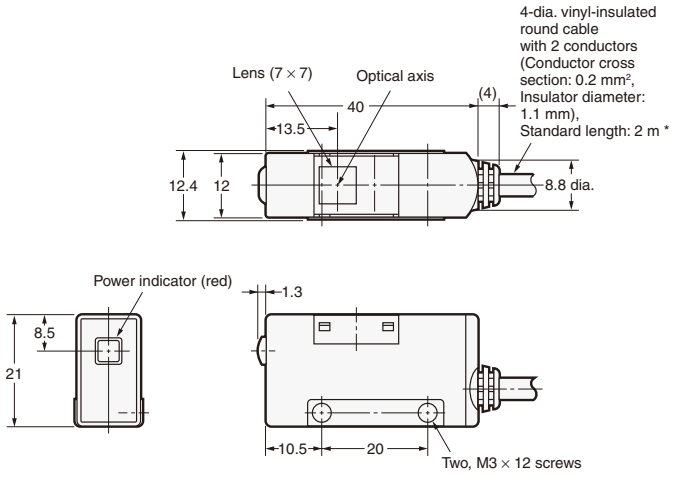

E3S-AT71/91 (Emitter)

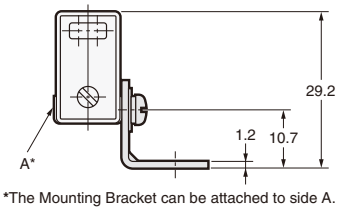

*The Mounting Bracket can be attached to side A.

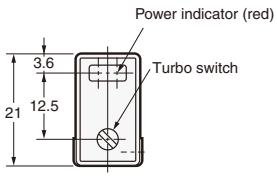

*The E3S-AT71 of E3S-AT91 has three conductors.

Mounting Holes

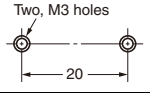

(c)Copyright OMRON Corporation 2008 All Rights Reserved.

Connector Sensors

E3S-AT66/86 (Receiver)

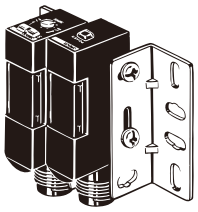

With Mounting Bracket Attached

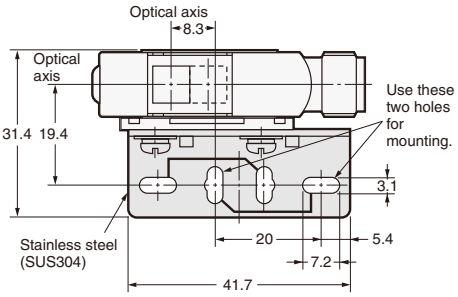

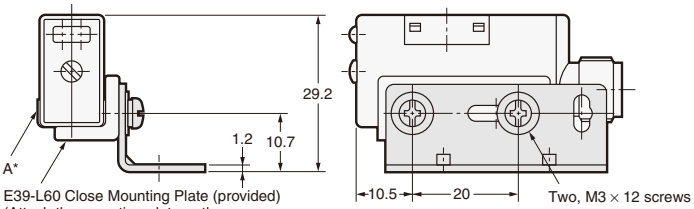

E39-L60 Close Mounting Plate (provided)
(Attach the mounting plate or the plug cannot be connected.)

*The Mounting Bracket can be attached to side A.

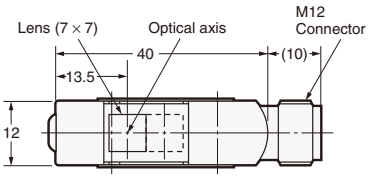

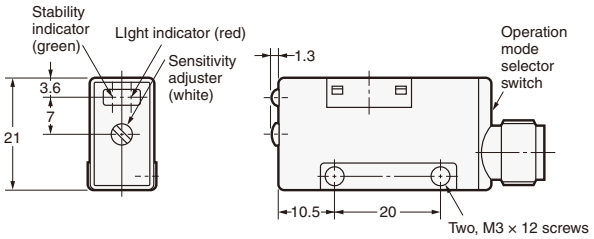

Mounting Holes

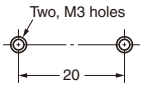

E3S-AT66/86 (Emitter)

With Mounting Bracket Attached

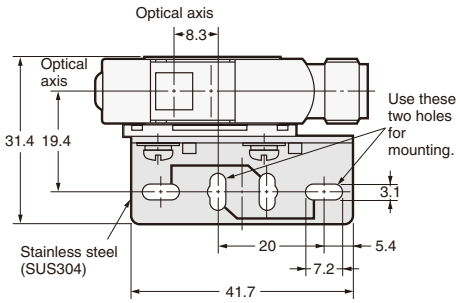

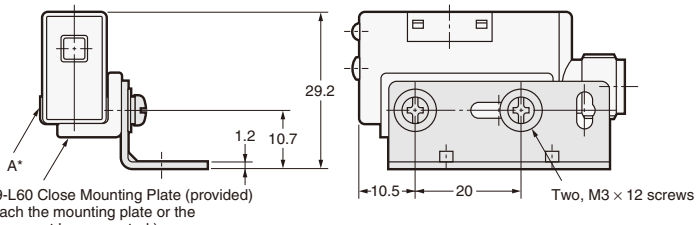

E39-L60 Close Mounting Plate (provided)
(Attach the mounting plate or the plug cannot be connected.)

*The Mounting Bracket can be attached to side A.

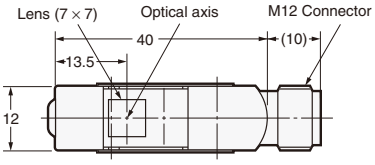

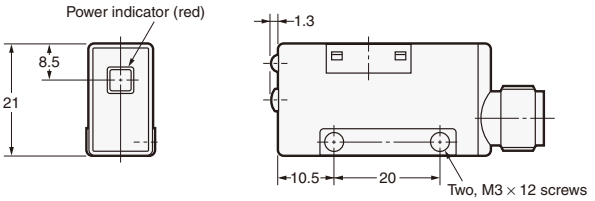

Mounting Holes

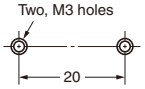

(c)Copyright OMRON Corporation 2008 All Rights Reserved.

Retro-reflective Sensors (Horizontal)

Pre-wired Sensors

E3S-AR11/21/31/41

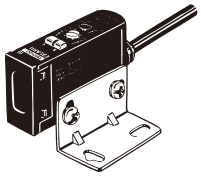

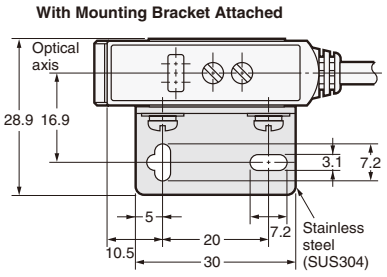

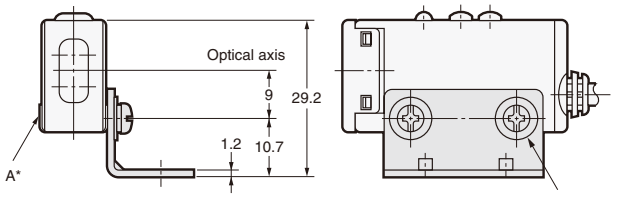

*The Mounting Bracket can be attached to side A.

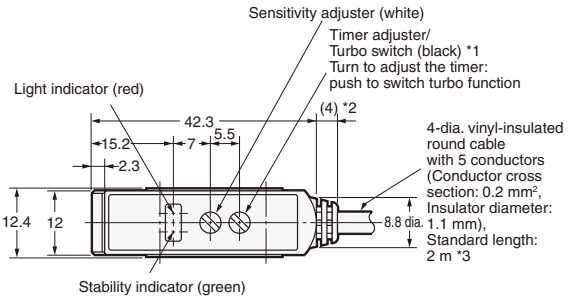

*1. For E3S-AR21 and E3S-AR41 only.
*2. 9.7 mm for E3S-AR21 and E3S-AR41.
*3. The E3S-AR11 or E3S-AR31 has three conductors.

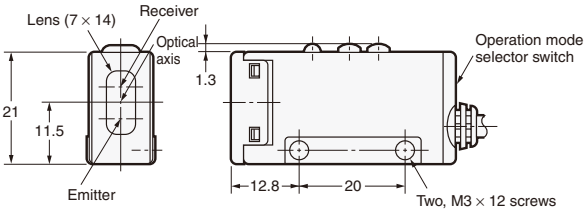

Mounting Holes

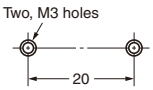

Sensors with Connectors

E3S-AR16/36

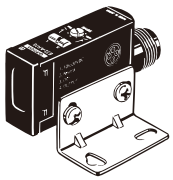

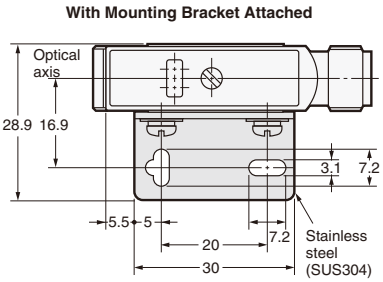

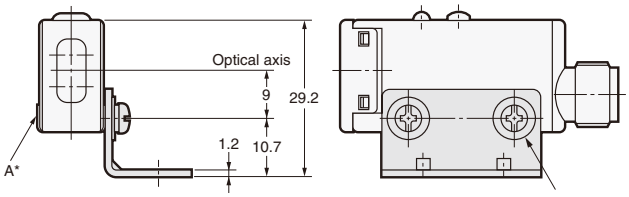

*The Mounting Bracket can be attached to side A.

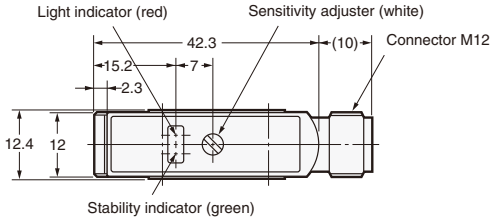

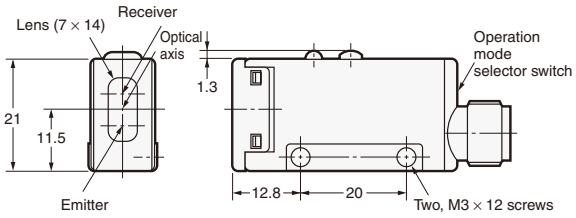

Mounting Holes

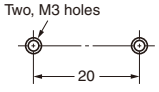

(c)Copyright OMRON Corporation 2008 All Rights Reserved.

Retro-reflective Sensors (Vertical)

Pre-wired Sensors

E3S-AR61/71/81/91

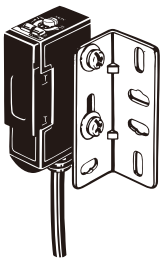

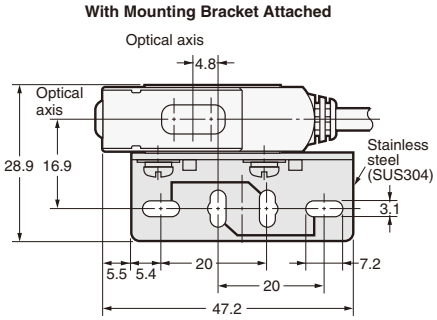

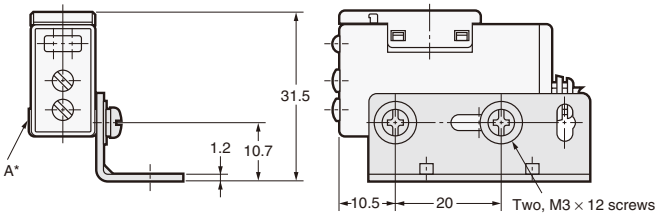

*The Mounting Bracket can be attached to side A.

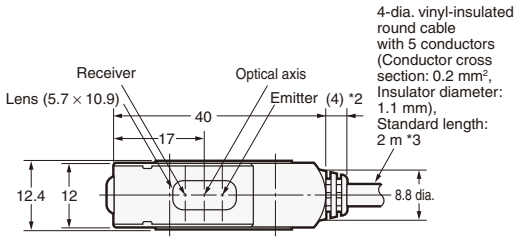

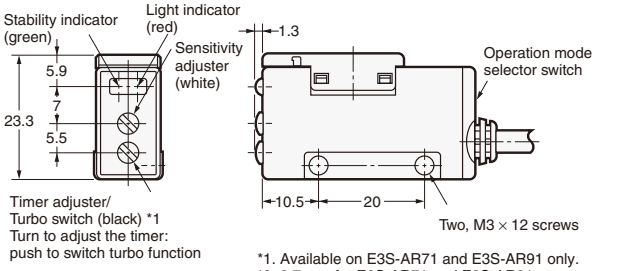

*1. Available on E3S-AR71 and E3S-AR91 only.
*2. 9.7 mm for E3S-AR71 and E3S-AR91.
*3. The E3S-AR611 or E3S-AR81 has three conductors.

Mounting Holes

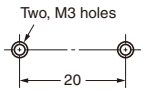

Sensors with Connectors

E3S-AR66/86

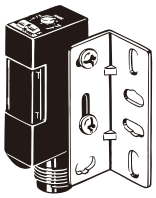

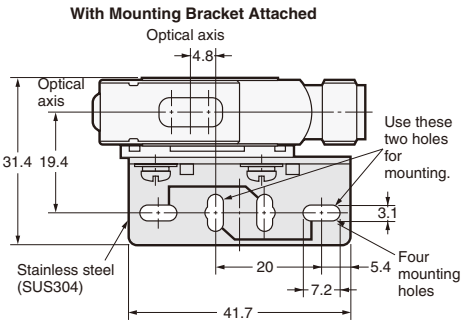

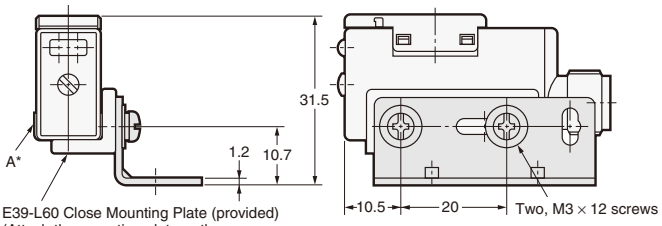

E39-L60 Close Mounting Plate (provided)
(Attach the mounting plate or the plug cannot be connected.)

*The Mounting Bracket can be attached to side A.

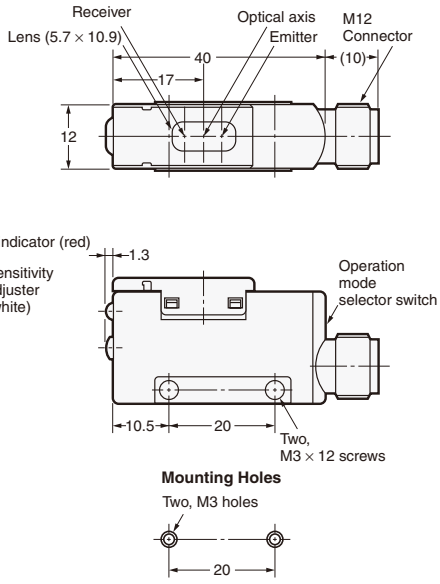

Mounting Holes

(c)Copyright OMRON Corporation 2008 All Rights Reserved.

Diffuse-reflective Sensors (Horizontal)

Pre-wired Sensors

E3S-AD11/12/13/21/22/23
-AD31/32/33/41/42/43

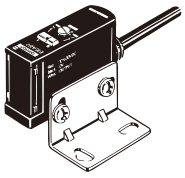

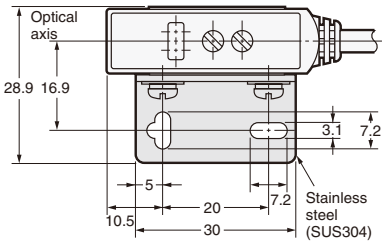

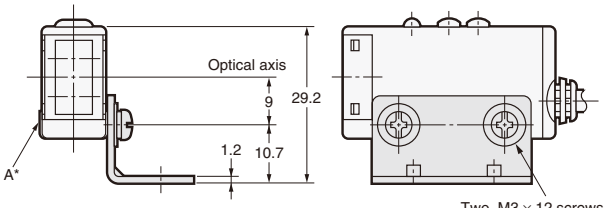

*The Mounting Bracket can be attached to side A.

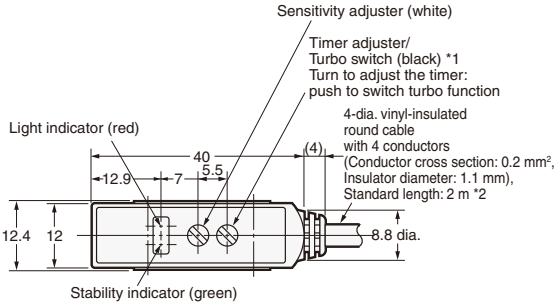

*1. Timer adjuster: Not available on E3S-AD11, E3S-AD12, E3S-AD13, E3S-AD31, E3S-AD32 and E3S-AD33.
Turbo switch: Available on E3S-AD21 and E3S-AD41 only.
*2. The E3S-AD11, E3S-AD12, E3S-AD13, E3S-AD31, E3S-AD32, or E3S-AD33 has three conductors.

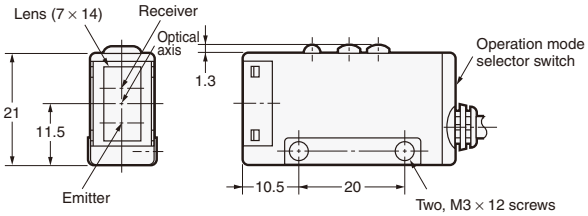

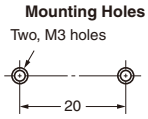

Sensors with Connectors

E3S-AD16/17/18/36/37/38

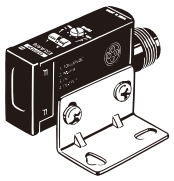

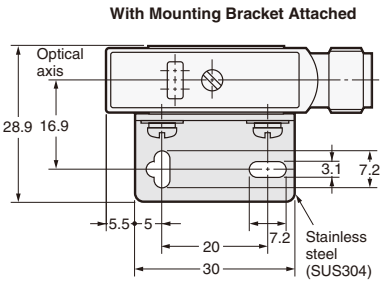

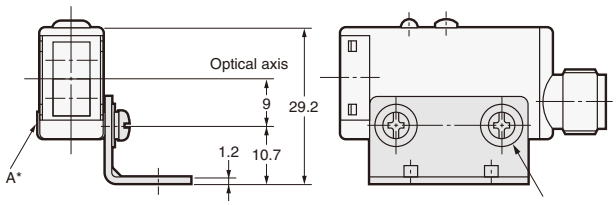

*The Mounting Bracket can be attached to side A.

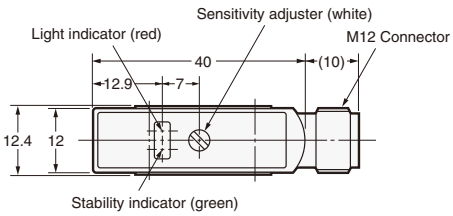

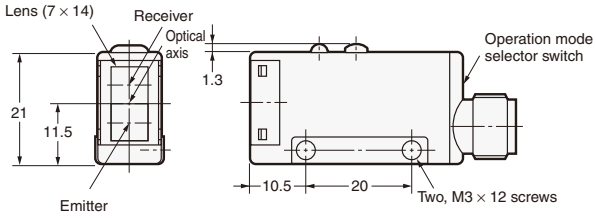

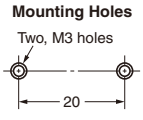

(c)Copyright OMRON Corporation 2008 All Rights Reserved.

Diffuse-reflective Sensors (Vertical)

Pre-wired Sensors

E3S-AD61/62/63/71/72/73
-AD81/82/83/91/92/93

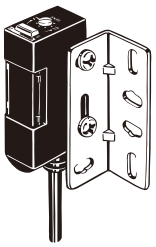

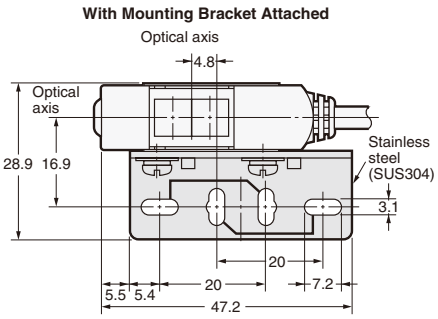

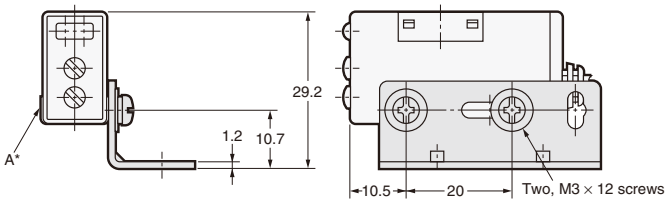

*The Mounting Bracket can be attached to side A.

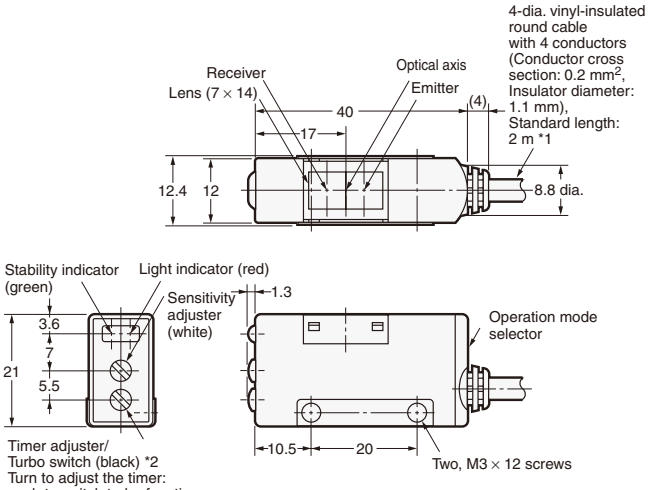

*1. E3S-AD61, E3S-AD62, E3S-AD63, E3S-AD81, E3S-AD82, and E3S-AD83 have three conductors.
*2. Timer adjuster: Not available on E3S-AD61, E3S-AD62, E3S-AD63, E3S-AD81, E3S-AD82 and E3S-AD83.
Turbo switch: Available on E3S-AD71 and E3S-AD91 only.

Mounting Holes

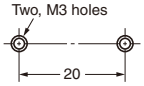

Sensors with Connectors

E3S-AD66/67/68/86/87/88

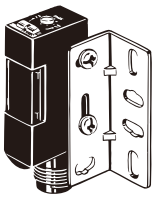

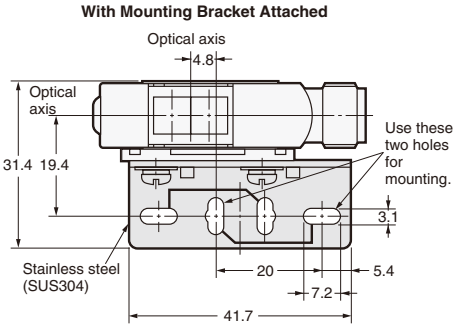

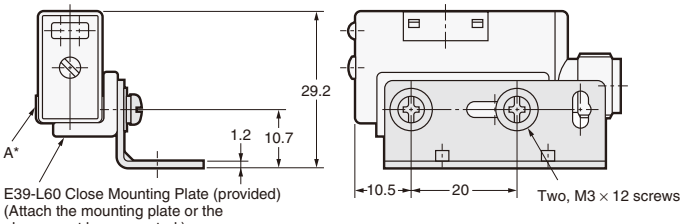

E39-L60 Close Mounting Plate (provided)
(Attach the mounting plate or the plug cannot be connected.)

*The Mounting Bracket can be attached to side A.

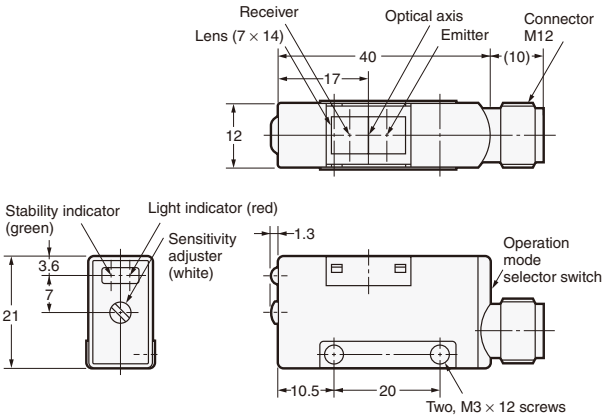

Mounting Holes

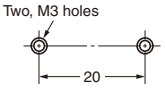

(c)Copyright OMRON Corporation 2008 All Rights Reserved.

Accessories (Order Separately)

Insert-type Long Slit (For Through-beam Model)

E39-S46

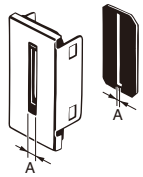

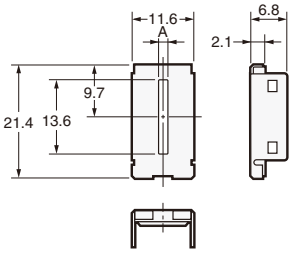

Name	Dimensions A	Material	Quantity
Supporter	2 mm	Stainless steel (SUS304)	One each for Emitter and Receiver (total of 2)
Slits	0.5 mm	PVC	One each for Emitter and Receiver (total of 4)
	1 mm		

Filters for Mutual Interference Prevention (For Through-beam Model)

E39-E6

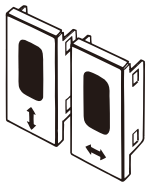

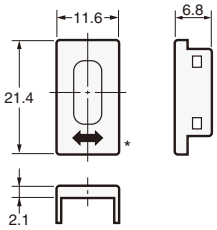

Material: Stainless steel (SUS304)

*Two of each for the Emitter and Receiver (total of four)

Optical Axis Confirmation Reflector (For Through-beam Model)

E39-R5

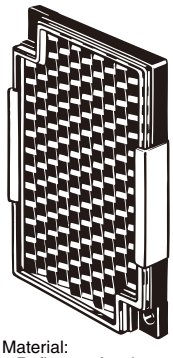

Material:
Reflector: Acryl
Back: ABS

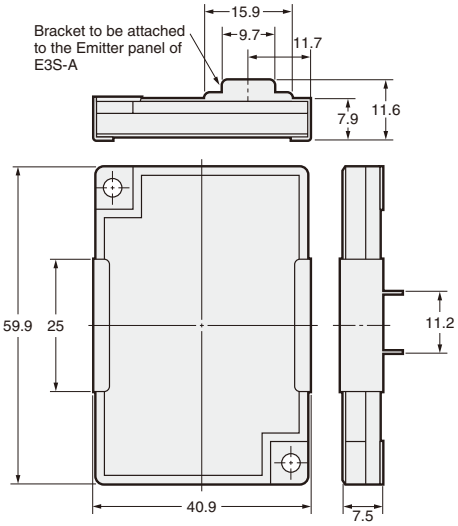

Reflectors
Mounting Brackets

In the interest of product improvement, specifications are subject to change without notice.

(c)Copyright OMRON Corporation 2008 All Rights Reserved.

General Precautions

For precautions on individual products, refer to *Safety Precautions* in individual product information.

⚠ WARNING

These Sensors cannot be used in safety devices for presses or other safety devices used to protect human life. These Sensors are designed for use in applications for sensing workpieces and workers that do not affect safety.

Precautions for Safe Use

To ensure safety, always observe the following precautions.

● Wiring

Item	Typical examples	
Power Supply Voltage Do not use a voltage in excess of the operating voltage range. Applying a voltage in excess of the operating voltage range, or applying AC power (100 VAC or greater) to a DC Sensor may cause explosion or burning.	• DC Three-wire NPN Output Sensors 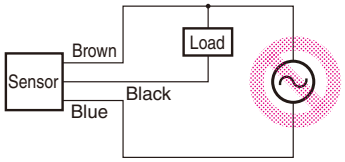	---
Load Short-circuiting Do not short-circuit the load. Doing so may cause explosion or burning.	• DC Three-wire NPN Output Sensor 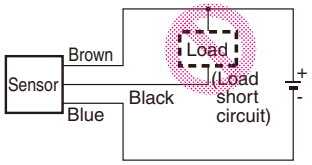	• AC Two-wire Sensors Example: E3E2 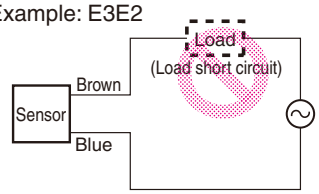
Incorrect Wiring Do not reverse the power supply polarity or otherwise wire incorrectly. Doing so may cause explosion or burning.	• DC Three-wire NPN Output Sensors Example: Incorrect Polarity 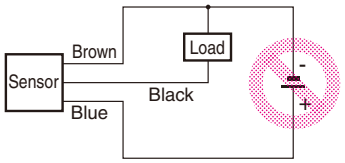	• DC Three-wire NPN Output Sensors Example: Incorrect Polarity Wiring 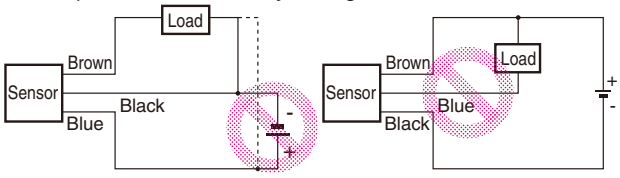
Connection without a load If the power supply is connected directly without a load, the internal elements may burst or burn. Be sure to insert a load when connecting the power supply.	• DC Three-wire NPN Output Sensors 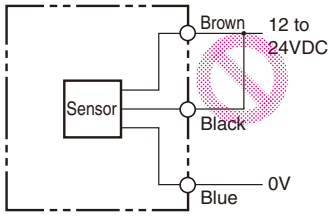	• AC 2-wire Sensors Example: E3E2 etc. 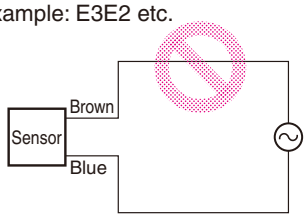

● Operating Environment

(1) Do not use a Sensor in an environment where there are explosive or inflammable gases.
(2) Do not use the Sensor in environments where the cables may become immersed in oil or other liquids or where liquids may penetrate the Sensor. Doing so may result in damage from burning and fire, particularly if the liquid is flammable.

(c)Copyright OMRON Corporation 2008 All Rights Reserved.

Precautions for Correct Use

● **Design**

Power Reset Time

The Sensor will be ready to detect within approximately 100 ms after the power is turned ON.
If the Sensor and the load are connected to separate power supplies, turn ON the Sensor power before turning ON the load power. Any exceptions to this rule are indicated in *Safety Precautions* in individual product information.

Turning OFF Power

An output pulse may be generated when the power is turned OFF. It is recommended that the load or load line power be turned OFF before the Sensor power is turned OFF.

Power Supply Types

An unsmoothed full-wave or half-wave rectifying power supply cannot be used.

Mutual Interference

Mutual interference is a state where an output is unstable because the Sensors are affected by light from the adjacent Sensors.
The following measures can be taken to avoid mutual interference.

Counter-measure	Concept	Through-beam Sensors	Reflective Sensors
1	Use a Sensor with the interference prevention function.	If Sensors are mounted in close proximity, use Sensors with the interference prevention function. 10 or fewer Sensors: E3X-DA□-S, E3X-MDA, E3C-LDA Fiber Sensors Performance, however, will depend on conditions. Refer to pages E3X-DA-S/E3X-MDA and E3C-LDA. 5 or fewer Sensors: E3X-NA Fiber Sensors 2 or fewer Sensors: E3T, E3Z, E3ZM, E3ZM-C, E3S-C, E3G-L1/L3, or E3S-C Built-in Amplifier Photoelectric Sensors (except Through-beam Sensors) E3C Photoelectric Sensor with separate amplifier	
2	Install an inference prevention filter.	A mutual interference prevention polarizing filter can be installed on only the E3Z-TA to allow close-proximity mounting of up to 2 Sensors. Mutual Interference Prevention Polarizing Filter: E39-E11	---
3	Separate Sensors to distance where interference does not occur.	Check the parallel movement distance range in the catalog, verify the set distance between adjacent Sensors, and install the Sensors accordingly at a distance at least 1.5 times the parallel movement distance range.	If the workpieces move from far to near, chattering may occur in the vicinity of the operating point. For this type of application, separate the Sensors by at least 1.5 times the operating range. 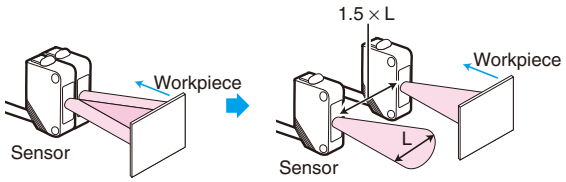
4	Alternate Emitters and Receivers.	Close mounting of Sensors is possible by alternating the Emitters with the Receivers in a zigzag fashion (up to two Sensors). However, if the workpieces are close to the Photoelectric Sensors, light from the adjacent Emitter may be received and cause the Sensor to change to the incident light state. 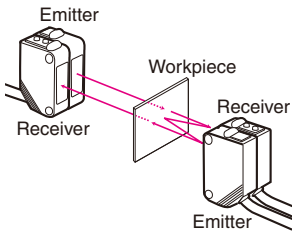	---
5	Offset the optical axes.	If there is a possibility that light from another Sensor may enter the Receiver, change the position of the Emitter and Receiver, place a light barrier between the Sensors, or take other measures to prevent the light from entering the Receiver. (Light may enter even if the Sensors are separated by more than the sensing distance.)	If Sensors are mounted in opposite each other, slant the Sensors as shown in the following diagram. (This is because the Sensors may affect each other and cause output chattering even if separated by more than the Sensor sensing distance.) 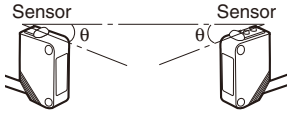
6	Adjust the sensitivity.	Lowering the sensitivity will generally help.	

(c)Copyright OMRON Corporation 2008 All Rights Reserved.

Noise

Countermeasures for noise depend on the path of noise entry, frequency components, and wave heights. Typical measures are as given in the following table.

Type of noise	Noise intrusion path and countermeasure	
	Before countermeasure	After countermeasure
Common mode noise (inverter noise) Common noise applied between the mounting board and the +V and 0-V lines, respectively.	Noise enters from the noise source through the frame (metal). 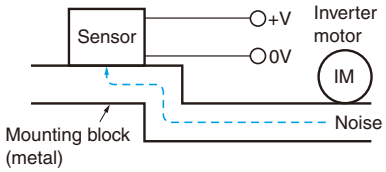	(1) Ground the inverter motor (to 100 Ω or less) (2) Ground the noise source and the power supply (0-V side) through a capacitor (film capacitor, 0.22 μF, 630 V). (3) Insert an insulator (plastic, rubber, etc.) between the Sensor and the mounting plate (metal). 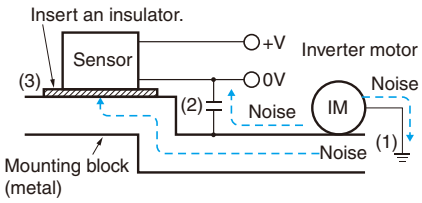
Radiant noise Ingress of high-frequency electromagnetic waves directly into Sensor, from power line, etc.	Noise propagates through the air from the noise source and directly enters the Sensor. 	• Insert a shield (copper) plate between the Sensor and the noise source e.g., a switching power supply). • Separate the noise source and the Sensor to a distance where noise does not affect operation. 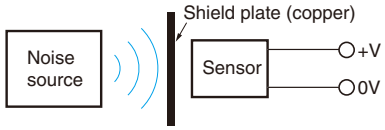
Power line noise Ingress of electromagnetic induction from high-voltage wires and switching noise from the switching power supply	Noise enters from the power line. 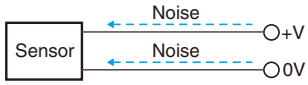	• Insert a capacitor (e.g., a film capacitor), noise filter (e.g., ferrite core or insulated transformer), or varistor in the power line. 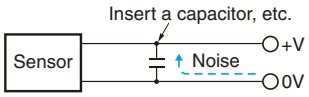

● Wiring

Cable

Unless otherwise indicated, the maximum length of cable extension is 100 m using wire that is 0.3 mm^2 or greater.
Exceptions are indicated in ***Safety Precautions*** in individual product information.

Cable Tensile Strength

When wiring the cable, do not subject the cable to a tension greater than that indicated in the following table.

Cable diameter	Tensile strength
Less than 4 mm	30 N max.
4 mm or greater	50 N max.

Note: Do not subject a shielded cable or coaxial cable to tension.

Repeated Bending

Normally, the Sensor cable should not be bent repeatedly.
(For bending-resistant cable, see ***Attachment to Moving Parts*** on page **C-4**.)

Separation from High Voltage (Wiring Method)

Do not lay the cables for the Sensor together with high-voltage lines or power lines. Placing them in the same conduit or duct may cause damage or malfunction due to induction interference. As a general rule, wire the Sensor in a separate system, use an independent metal conduit, or use shielded cable.

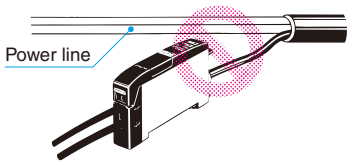

Work Required for Unconnected Leads

Unused leads for self-diagnosis outputs or other special functions should be cut and wrapped with insulating tape to prevent contact with other terminals.

(c)Copyright OMRON Corporation 2008 All Rights Reserved.

Power Supply

When using a commercially available switching regulator, ground the FG (frame ground) and G (ground) terminals.
If not grounded, switching noise in the power supply may cause malfunction.

Example of Connection with S3D2 Sensor Controller

DC Three-wire NPN Output Sensors

Reverse operation is possible using the signal input switch on the S3D2.

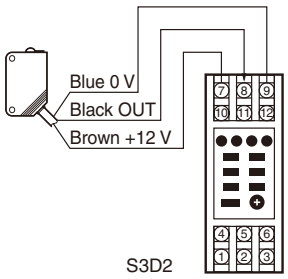

● Mounting

Attachment to Moving Parts

To mount the Photoelectric Sensor to a moving part, such as a robot hand, consider using a Sensors that uses a bending-resistant cable (robot cable).

Although the bending repetition tolerance of a standard cable is approximately 13,000 times, robot cable has an excellent bending tolerance of approximately 500,000 times.

Cable Bending Destruction Test (Tough Wire Breaking Test)

With current flowing, bending is repeated to check the number of bends until the current stops.

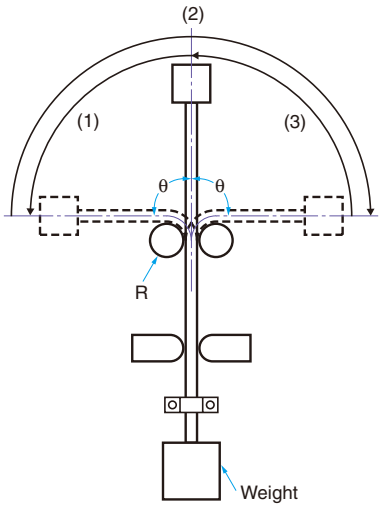

Test	Specimen	Standard cable VR (H) 3 x18/0.12	Robot cable: Strong, conductive electrical wire 2 x 0.15 mm², shielded
Description/conditions	Bending angle (θ)	Left/right 90° each	Left/right 45° each
	Bending repetitions	---	60 bends/minute
	Weight	300g	200g
	Operation per bending	(1) through (3) in figure once	(1) through (3) in figure once
	Bending radius of support points (R)	5 mm	2.5 mm
Result		Approx. 13,000 times	Approx. 500,000 times

The testing conditions of the standard cable and robot cable are different.
Refer to the values in the above table to check bend-resistant performance under actual working conditions.

(c)Copyright OMRON Corporation 2008 All Rights Reserved.

Securing Fibers

The E3X Fiber Unit uses a one-touch locking mechanism. Use the following methods to attach and remove Fiber Units.

(1) Attaching Fibers

Open the protective cover, insert the fiber up to the insertion mark on the side of the Fiber Unit, and then lower the lock lever.

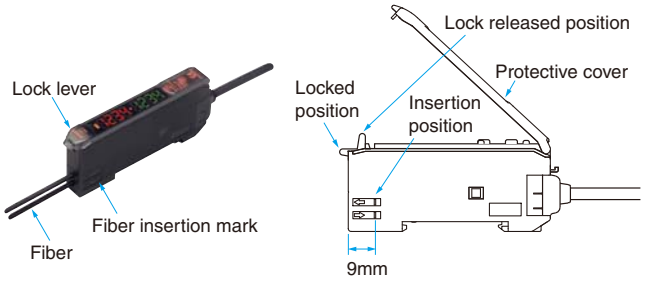

(2) Removing Fibers

Open the protective cover, lift up the lock lever, and pull out the fibers.

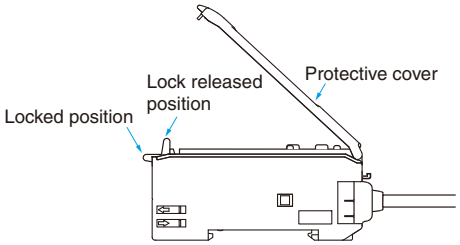

Note: 1. To maintain the fiber characteristics, make sure that the lock is released before removing the fibers.
2. Lock and unlock the fibers at an ambient temperature of −10 to 40°C.

● Adjustments

Optical Axis Adjustment

Move the Photoelectric Sensor both vertically and horizontally and set it in the center of the range in which the operation indicator is lit or not lit. For the E3S-C, the optical axis and the mechanical axis are the same, so the optical axis can be easily adjusted by aligning the mechanical axis.

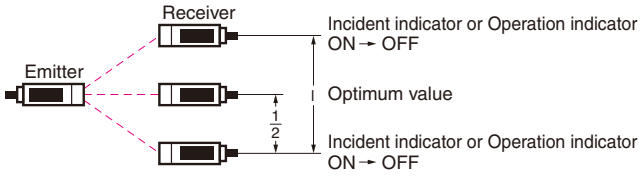

Optical axis: The axis from the center of the lens to the center of the beam for the Emitter and the axis from the center of the lens to the center of the reception area for the Receiver.

Mechanical axis: The axis perpendicular to the center of the lens.

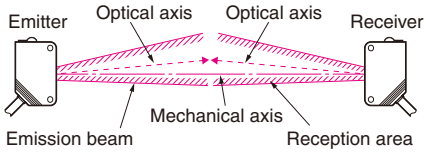

(c)Copyright OMRON Corporation 2008 All Rights Reserved.

● Operating Environment

Water Resistance

Do not use in water, in rain, or outside.

Ambient Conditions

Do not use this Sensor in the following locations. Otherwise, it may malfunction or fail.

(1) Locations exposed to excessive dust and dirt
(2) Locations exposed to direct sunlight
(3) Locations with corrosive gas vapors
(4) Locations where organic solvents may splash onto the Sensor
(5) Locations subject to vibration or shock
(6) Locations where there is a possibility of direct contact with water, oil, or chemicals
(7) Locations with high humidity and where condensation may result

Environmentally Resistive Sensors

The E32-T11F/T12F/T14F/T81F-S/D12F/D82F and E3HQ can be used in locations (3) and (6) above.

Optical Fiber Photoelectric Sensors in Explosive Gas Atmospheres

The Fiber Unit can be installed in the hazardous area, and the Amplifier Unit can be installed in a non-hazardous area.

<Reason>

For explosion or fire due to electrical equipment to occur, both the hazardous atmosphere and a source of ignition must be in the same location. Optical energy does not act as an ignition source, thus there is no danger of explosion or fire. The lens, case, and fiber covering are made of plastic, so this setup cannot be used if there is a possibility of contact with solvents that will corrode or degrade (e.g., cloud) the plastic.

<Ignition Source>

Electrical sparks or high-temperature parts that have sufficient energy to cause explosion in a hazardous atmosphere are called ignition sources.

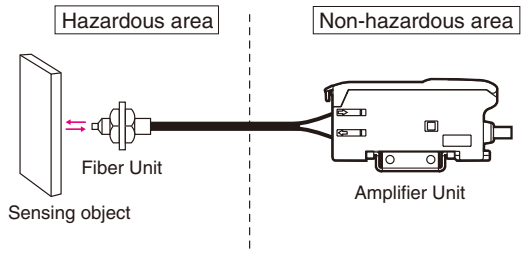

Influence from External Electrical Fields

Do not bring a transceiver near the Photoelectric Sensor or its wiring, because this may cause incorrect operation.

● Maintenance and Inspection

Points to Check When the Sensor Does Not Operate

- If the Sensor does not operate, check the following points.

(1) Are the wiring and connections correct?
(2) Are any of the mounting screws loose?
(3) Are the optical axis and sensitivity adjusted correctly?
(4) Do the sensing object and the workpiece speed satisfy the ratings and specifications?
(5) Are any foreign objects, such as debris or dust, adhering to the Emitter lens or Receiver lens?
(6) Is strong light, such as sunlight (e.g., reflected from a wall), shining on the Receiver?
(7) Do not attempt to disassemble or repair the Sensor under any circumstances.
(8) If you determine that the Sensor clearly has a failure, immediately turn OFF the power supply.

Lens and Case

The lens and case of the Photoelectric Sensor are primarily made of plastic. Dirt should be gently wiped off with a dry cloth. Do not use thinner or other organic solvents.

- The case of the E3ZM, E3ZM-C and E3S-C is metal. The lens, however, is plastic.

● Accessories

Using a Reflector (E39-R3/R37/RS1/RS2/RS3)

During Application

(1) When using adhesive tape on the rear face, apply it after washing away oil and dust with detergent. The Reflector cannot be mounted if there is any oil or dirt remaining.
(2) Do not press on the E39-RS1/RS2/RS3 with metal or a fingernail.This may weaken performance.
(3) This Sensor cannot be used in locations where oil or chemicals may splash on the Sensor.

M8 and M12 Connectors

- Be sure to connect or disconnect the connector after turning OFF the Sensor.
- Hold the connector cover to connect or disconnect the connector.
- Secure the connector cover by hand. Do not use pliers, otherwise the connector may be damaged.
- If the connector is not connected securely, the connector may be disconnected by vibration or the proper degree of protection of the Sensor may not be maintained.

● Others

Values Given in Typical Examples

The data and values given as typical examples are not ratings and performance and do not indicate specified performance. They are rather values from samples taken from production lots, and are provided for reference as guidelines. Typical examples include the minimum sensing object, engineering data, step (height) detection data, and selection list for specifications.

Cleaning

- Keep organic solvents away from the Sensor. Organic solvents will dissolve the surface.
- Use a soft, dry cloth to clean the Sensor.

(c)Copyright OMRON Corporation 2008 All Rights Reserved.

Read and Understand This Catalog

Please read and understand this catalog before purchasing the products. Please consult your OMRON representative if you have any questions or comments.

Warranty and Limitations of Liability

WARRANTY

OMRON's exclusive warranty is that the products are free from defects in materials and workmanship for a period of one year (or other period if specified) from date of sale by OMRON.

OMRON MAKES NO WARRANTY OR REPRESENTATION, EXPRESS OR IMPLIED, REGARDING NON-INFRINGEMENT, MERCHANTABILITY, OR FITNESS FOR PARTICULAR PURPOSE OF THE PRODUCTS. ANY BUYER OR USER ACKNOWLEDGES THAT THE BUYER OR USER ALONE HAS DETERMINED THAT THE PRODUCTS WILL SUITABLY MEET THE REQUIREMENTS OF THEIR INTENDED USE. OMRON DISCLAIMS ALL OTHER WARRANTIES, EXPRESS OR IMPLIED.

LIMITATIONS OF LIABILITY

OMRON SHALL NOT BE RESPONSIBLE FOR SPECIAL, INDIRECT, OR CONSEQUENTIAL DAMAGES, LOSS OF PROFITS, OR COMMERCIAL LOSS IN ANY WAY CONNECTED WITH THE PRODUCTS, WHETHER SUCH CLAIM IS BASED ON CONTRACT, WARRANTY, NEGLIGENCE, OR STRICT LIABILITY.

In no event shall responsibility of OMRON for any act exceed the individual price of the product on which liability is asserted.

IN NO EVENT SHALL OMRON BE RESPONSIBLE FOR WARRANTY, REPAIR, OR OTHER CLAIMS REGARDING THE PRODUCTS UNLESS OMRON'S ANALYSIS CONFIRMS THAT THE PRODUCTS WERE PROPERLY HANDLED, STORED, INSTALLED, AND MAINTAINED AND NOT SUBJECT TO CONTAMINATION, ABUSE, MISUSE, OR INAPPROPRIATE MODIFICATION OR REPAIR.

Application Considerations

SUITABILITY FOR USE

OMRON shall not be responsible for conformity with any standards, codes, or regulations that apply to the combination of products in the customer's application or use of the product.

At the customer's request, OMRON will provide applicable third party certification documents identifying ratings and limitations of use that apply to the products. This information by itself is not sufficient for a complete determination of the suitability of the products in combination with the end product, machine, system, or other application or use.

The following are some examples of applications for which particular attention must be given. This is not intended to be an exhaustive list of all possible uses of the products, nor is it intended to imply that the uses listed may be suitable for the products:

- Outdoor use, uses involving potential chemical contamination or electrical interference, or conditions or uses not described in this catalog.
- Nuclear energy control systems, combustion systems, railroad systems, aviation systems, medical equipment, amusement machines, vehicles, safety equipment, and installations subject to separate industry or government regulations.
- Systems, machines, and equipment that could present a risk to life or property.

Please know and observe all prohibitions of use applicable to the products.

NEVER USE THE PRODUCTS FOR AN APPLICATION INVOLVING SERIOUS RISK TO LIFE OR PROPERTY WITHOUT ENSURING THAT THE SYSTEM AS A WHOLE HAS BEEN DESIGNED TO ADDRESS THE RISKS, AND THAT THE OMRON PRODUCT IS PROPERLY RATED AND INSTALLED FOR THE INTENDED USE WITHIN THE OVERALL EQUIPMENT OR SYSTEM.

Disclaimers

CHANGE IN SPECIFICATIONS

Product specifications and accessories may be changed at any time based on improvements and other reasons.

It is our practice to change model numbers when published ratings or features are changed, or when significant construction changes are made. However, some specifications of the product may be changed without any notice. When in doubt, special model numbers may be assigned to fix or establish key specifications for your application on your request. Please consult with your OMRON representative at any time to confirm actual specifications of purchased product.

DIMENSIONS AND WEIGHTS

Dimensions and weights are nominal and are not to be used for manufacturing purposes, even when tolerances are shown.

ERRORS AND OMISSIONS

The information in this catalog has been carefully checked and is believed to be accurate; however, no responsibility is assumed for clerical, typographical, or proofreading errors, or omissions.

PERFORMANCE DATA

Performance data given in this catalog is provided as a guide for the user in determining suitability and does not constitute a warranty. It may represent the result of OMRON's test conditions, and the users must correlate it to actual application requirements. Actual performance is subject to the OMRON Warranty and Limitations of Liability.

PROGRAMMABLE PRODUCTS

OMRON shall not be responsible for the user's programming of a programmable product, or any consequence thereof.

COPYRIGHT AND COPY PERMISSION

This catalog shall not be copied for sales or promotions without permission.

This catalog is protected by copyright and is intended solely for use in conjunction with the product. Please notify us before copying or reproducing this catalog in any manner, for any other purpose. If copying or transmitting this catalog to another, please copy or transmit it in its entirety.

2008.9

OMRON Corporation
Industrial Automation Company

http://www.ia.omron.com/

In the interest of product improvement, specifications are subject to change without notice.

(c)Copyright OMRON Corporation 2008 All Rights Reserved.

Компания «ЭлектроПласт» предлагает заключение долгосрочных отношений при поставках импортных электронных компонентов на взаимовыгодных условиях!

Наши преимущества:

- Оперативные поставки широкого спектра электронных компонентов отечественного и импортного производства напрямую от производителей и с крупнейших мировых складов;
- Поставка более 17-ти миллионов наименований электронных компонентов;
- Поставка сложных, дефицитных, либо снятых с производства позиций;
- Оперативные сроки поставки под заказ (от 5 рабочих дней);
- Экспресс доставка в любую точку России;
- Техническая поддержка проекта, помощь в подборе аналогов, поставка прототипов;
- Система менеджмента качества сертифицирована по Международному стандарту ISO 9001;
- Лицензия ФСБ на осуществление работ с использованием сведений, составляющих государственную тайну;
- Поставка специализированных компонентов (Xilinx, Altera, Analog Devices, Intersil, Interpoint, Microsemi, Aeroflex, Peregrine, Syfer, Eurofarad, Texas Instrument, Miteq, Cobham, E2V, MA-COM, Hittite, Mini-Circuits,General Dynamics и др.);

Помимо этого, одним из направлений компании «ЭлектроПласт» является направление «Источники питания». Мы предлагаем Вам помощь Конструкторского отдела:

- Подбор оптимального решения, техническое обоснование при выборе компонента;
- Подбор аналогов;
- Консультации по применению компонента;
- Поставка образцов и прототипов;
- Техническая поддержка проекта;
- Защита от снятия компонента с производства.

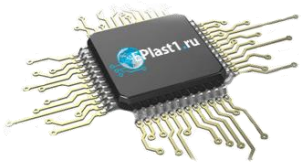

Как с нами связаться

Телефон: 8 (812) 309 58 32 (многоканальный)
Факс: 8 (812) 320-02-42
Электронная почта: org@eplast1.ru
Адрес: 198099, г. Санкт-Петербург, ул. Калинина, дом 2, корпус 4, литера А.