8-BIT SHIFT REGISTER WITH 8-BIT OUTPUT REGISTER

Description

The 74AHC594 is an advanced high speed CMOS device.

An eight bit shift register accepts data from the serial input (DS) on each positive transition of the shift register clock (SHCP). When asserted low the shift regisister reset function ($\overline{SHR}$) sets all shift register values to zero and is independent of all clocks. Also when asserted low the storage register reset function ($\overline{STR}$) sets all shift register values to zero and is independent of all clocks.

Data from the input serial shift register is placed in the output register with a rising pulse on the storages resister clock (STCP). The storage resister includes output Q7S which is used for cascading information between devices. As the information moves into the storage register, it is asserted on the push-pull outputs Q0-Q7.

All registers capture data on rising edge and change output on the falling edge. If both clocks are connected together, the input shift register is always one clock cycle ahead of the output register.

Pin Assignments

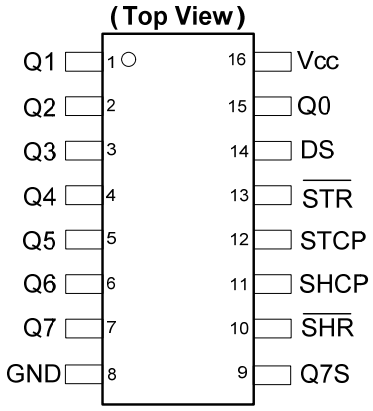

SO-16 / TSSOP-16

Features

- Wide Supply Voltage Range from 2.0V to 5.5V
- Sinks or sources 8mA at V_{CC} = 4.5V
- CMOS low power consumption
- Schmitt Trigger Action at All Inputs
- Inputs accept up to 5.5V
- ESD Protection Tested per JESD 22
  - Exceeds 200-V Machine Model (A115-A)
  - Exceeds 2000-V Human Body Model (A114-A)
  - Exceeds 1000-V Charged Device Model (C101C)
- Latch-Up Exceeds 250mA per JESD 78, Class II
- **Totally Lead-Free & Fully RoHS Compliant (Notes 1 & 2)**
- **Halogen and Antimony Free. "Green" Device (Note 3)**

Applications

- General Purpose Logic
- Serial to Parallel Data conversion
- Capture and hold data for extended periods of time.
- Allow simple serial bit streams from a microcontroller to control as many peripheral lines as needed
- Wide array of products such as:
  - Computer Peripherals
  - Appliances
  - Industrial Control

Notes: 1. No purposely added lead. Fully EU Directive 2002/95/EC (RoHS) & 2011/65/EU (RoHS 2) compliant.
2. See http://www.diodes.com for more information about Diodes Incorporated's definitions of Halogen- and Antimony-free, "Green" and Lead-free.
3. Halogen- and Antimony-free "Green" products are defined as those which contain <900ppm bromine, <900ppm chlorine (<1500ppm total Br + Cl) and <1000ppm antimony compounds.

Click here for ordering information, located at the end of datasheet

© Diodes Incorporated

Pin Descriptions

Pin Number	Pin Name	Functions
1	Q1	Parallel Data Output 1
2	Q2	Parallel Data Output 2
3	Q3	Parallel Data Output 3
4	Q4	Parallel Data Output 4
5	Q5	Parallel Data Output 5
6	Q6	Parallel Data Output 6
7	Q7	Parallel Data Output 7
8	GND	Ground
9	Q7S	Serial Data Output
10	$\overline{SHR}$	Shift Register Reset active low
11	SHCP	Shift Register Clock Input
12	STCP	Storage Register Clock Input
13	$\overline{STR}$	Storage Register Reset active low
14	DS	Serial Data input
15	Q0	Parallel Data Output 0
16	Vcc	Supply Voltage

Functional Diagram

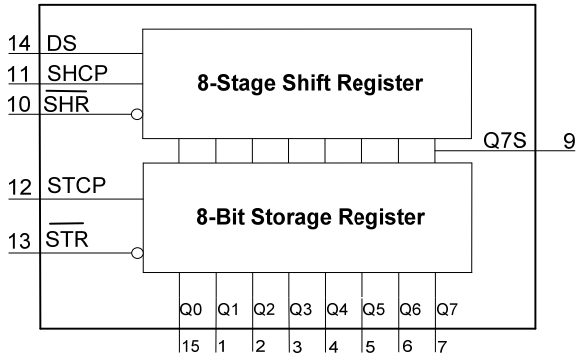

Logic Diagram

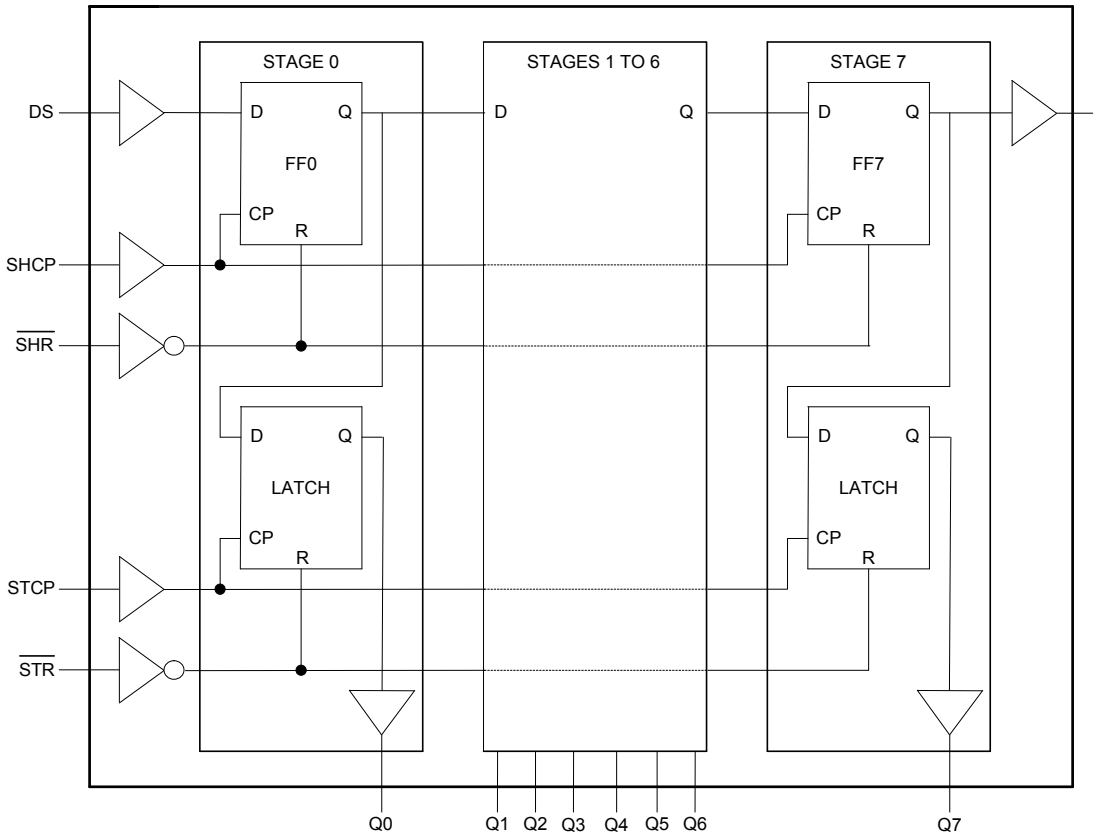

© Diodes Incorporated

Functional Description and Timing Diagram

Control				Input	Output		Function
$\overline{SHR}$	$\overline{STR}$	SHCP	STCP	DS	Q7S	Qn	
L	X	X	X	X	L	NC	Clear Shift Register
X	L	X	X	X	NC	L	Clear Storage Register
H	X	↑	L	H or L	Q6S	NC	Loads DS into shift register stage 0. All Q_S shifted
H	H	X	↑	X	NC	Qs	Contents of shift register moved to starge register all Q_S -> Q_N
H	H	↑	↑	H or L	Q6S	QnS	Shift Register one pulse count ahead of storage register.

H=HIGH voltage state
L=LOW voltage state
↑=LOW to HIGH transition
X= don't care – high or low (not floating)
NC= No change

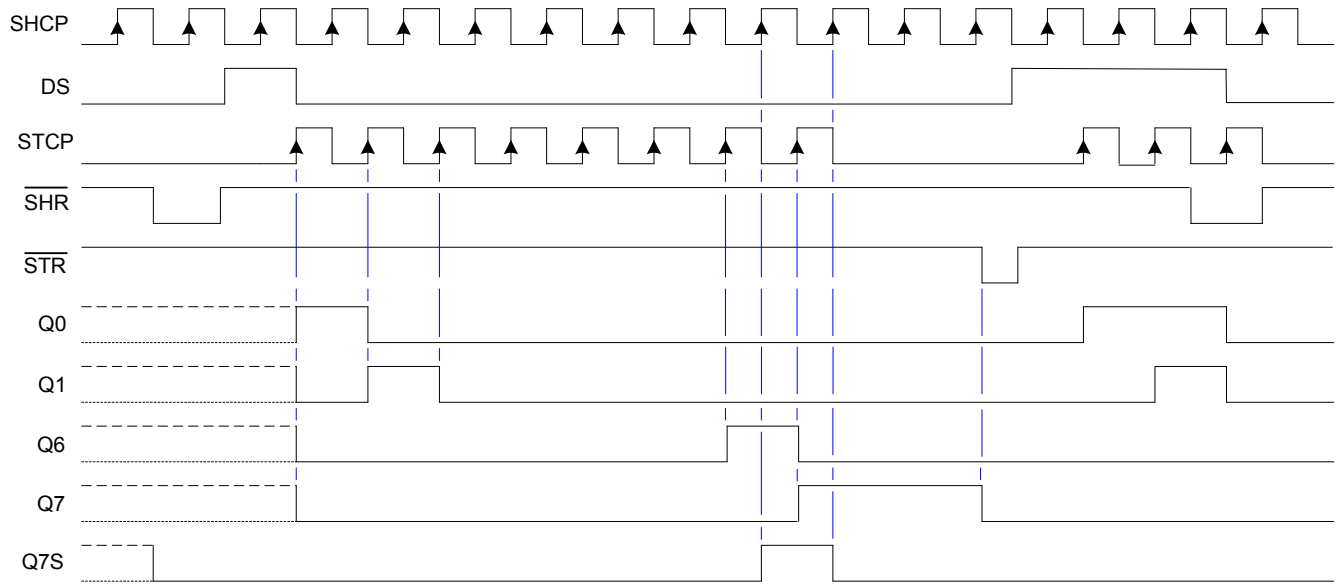

Absolute Maximum Ratings (Note 4) (@T_A = +25°C, unless otherwise specified.)

Symbol	Parameter	Rating	Unit
ESD HBM	Human Body Model ESD Protection	2	kV
ESD CDM	Charged Device Model ESD Protection	1	kV
ESD MM	Machine Model ESD Protection	200	V
V_{CC}	Supply Voltage Range	-0.5 to +7.0	V
V_I	Input Voltage Range	-0.5 to +7.0	V
V_o	Voltage applied to output in high or low state	-0.3 to V_{CC} +0.5	V
I_{IK}	Input Clamp Current V_I< -0.5V	-20	mA
I_{OK}	Output Clamp Current V_O<-0.5V	-20	mA
I_{OK}	Output Clamp Current V_O> V_{CC} +0.5V	20	mA
I_O	Continuous output current	±25	mA
I_{CC}	Continuous current through Vcc	75	mA
I_{GND}	Continuous current through GND	-75	mA
T_J	Operating Junction Temperature	-40 to +150	°C
T_{STG}	Storage Temperature	-65 to +150	°C
P_{TOT}	Total Power Dissipation	500	mW

Notes: 4. Stresses beyond the absolute maximum may result in immediate failure or reduced reliability. These are stress values and device operation should be within recommend values.

© Diodes Incorporated

Recommended Operating Conditions (Note 5) (@T_A = +25°C, unless otherwise specified.)

Symbol	Parameter	Conditions	Min	Max	Unit
V_{CC}	Supply Voltage	–	2.0	5.5	V
V_I	Input Voltage	–	0	5.5	V
V_O	Output Voltage	–	0	V_{CC}	V
Δt/ΔV	Input transition Rise or Fall Rate	V_{CC} = 3.0V to 3.6V	–	100	ns/V
		V_{CC} = 4.5V to 5.5V	–	20	
T_A	Operating Free-Air Temperature	–	-40	+125	°C

Note: 5. Unused inputs should be held at V_{CC} or Ground.

Electrical Characteristics (@T_A = +25°C, unless otherwise specified.)

Symbol	Parameter	Test Conditions	V_{CC}	T_A = +25°C			T_A = -40°C to +85°C		T_A = -40°C to +125°C		Unit
				Min	Typ	Max	Min	Max	Min	Max	
V_{IH}	High-Level Input Voltage	–	2.0V	1.5	–	–	1.5	–	1.5	–	V
		–	3.0V	2.1	–	–	2.1	–	2.1	–	
		–	5.5V	3.85	–	–	3.85	–	3.85	–	
V_{IL}	Low-Level Input Voltage	–	2.0V	–	–	0.5	–	0.5	–	0.5	V
		–	3.0V	–	–	0.9	–	0.9	–	0.9	
		–	5.5V	–	–	1.65	–	1.65	–	1.65	
V_{OH}	High-Level Output Voltage	I_{OH} = -50μA	2.0V	1.9	2.0	–	1.9	–	1.9	–	V
		I_{OH} = -50μA	3.0V	2.9	3.0	–	2.9	–	2.9	–	
		I_{OH} = -50μA	4.5V	4.4	4.5	–	4.4	–	4.4	–	
		I_{OH} = -4mA	3.0V	2.58	–	–	2.48	–	2.40	–	
		I_{OH} = -8mA	4.5V	3.94	–	–	3.80	–	3.70	–	
V_{OL}	Low-Level Output Voltage	I_{OL} = 50μA	2.0V	–	0	0.1	–	0.1	–	0.1	V
		I_{OL} = 50μA	3.0V	–	0	0.1	–	0.1	–	0.1	
		I_{OL} = 50μA	4.5V	–	0	0.1	–	0.1	–	0.1	
		I_{OL} = 4mA	3.0V	–	–	0.36	–	0.44	–	0.55	
		I_{OL} = 8mA	4.5V	–	–	0.36	–	0.44	–	0.55	
I_I	Input Current	V_I = GND or 5.5V	5.5V	–	0.01	± 0.1	–	± 1	–	± 2	μA
I_{CC}	Supply Current	V_I = GND or V_{CC} I_O = 0	5.5V	–	–	4	–	40	–	80	μA
C_i	Input Capacitance	V_i = V_{CC} or GND	5.5V	–	3.5	10	–	10	–	10	pF

© Diodes Incorporated

Switching Characteristics

Symbol / Parameter	Pins	Test Conditions	V_{CC}	T_A = +25°C			-40°C to +85°C		-40°C to +125°C		Unit
				Min	Typ	Max	Min	Max	Min	Max	
f_{MAX} Maximum Frequency	SHCP or STCP	Figure1	3.0V to 3.6V	80	125	–	70	–	65	–	MHz
			4.5V to 5.5V	90	70	–	80	–	70	–	
t_W Pulse Width	SHCP and STCP HIGH or LOW	Figure1	3.0V to 3.6V	6.0	–	–	6.5	–	7.0	–	ns
			4.5V to 5.5V	5.5	–	–	6.0	–	6.5	–	
	$\overline{SHR}$ and $\overline{STR}$ HIGH or LOW	Figure1	3.0V to 3.6V	5.0	–	–	5.0	–	5.5	–	
			4.5V to 5.5V	5.0	–	–	5.2	–	5.7	–	
t_{SU} Set-up Time	DS to SHCP	Figure1	3.0V to 3.6V	3.5	–	–	3.5	–	3.5	–	ns
			4.5V to 5.5V	3.0	–	–	3.0	–	3.0	–	
	$\overline{SHR}$ to STCP	Figure1	3.0V to 3.6V	8.0	–	–	9.0	–	9.5	–	
			4.5V to 5.5V	5.0	–	–	5.0	–	5.5	–	
	SHCP tp STCP	Figure1	3.0V to 3.6V	8.0	–	–	8.5	–	9.0	–	ns
			4.5V to 5.5V	5.0	–	–	5.0	–	5.5	–	
t_H Hold Time	DS to SHCP	Figure1	3.0V to 3.6V	1.5	–	–	1.5	–	1.5	–	ns
			4.5V to 5.5V	2.0	–	–	2.0	–	2.0	–	
t_{REC} Recovery Time	$\overline{SHR}$ to SHCP	Figure1	3.0V to 3.6V	4.2	–	–	4.8	–	5.3	–	ns
			4.5V to 5.5V	2.9	–	–	3.3	–	3.8	–	
	$\overline{SHR}$ to STCP	Figure1	3.0V to 3.6V	4.6	–	–	5.3	–	5.8	–	ns
			4.5V to 5.5V	3.2	–	–	3.7	–	4.3	–	
t_{PLH} LOW to HIGH Propagation Delay	SHCP toQ7S	Figure1 C_L = 15pF	3.0V to 3.6V	–	5.2	8.5	2.2	9.7	2.2	10.6	ns
			4.5V to 5.5V	–	3.8	6.3	1.7	7.2	1.7	7.8	
		Figure1 C_L = 50pF	3.0V to 3.6V	–	7.4	11.5	3.0	13.2	3.0	14.3	
			4.5V to 5.5V	–	4.8	8.0	2.4	9.1	2.4	10.0	
	STCP to Qn	Figure1 C_L = 15pF	3.0V to 3.6V	–	5.1	8.3	2.3	9.5	2.3	10.6	ns
			4.5V to 5.5V	–	3.5	5.7	1.8	6.5	1.8	7.1	
		Figure1 C_L = 50pF	3.0V to 3.6V	–	7.3	11.9	3.3	13.6	3.3	14.7	
			4.5V to 5.5V	–	4.8	7.8	2.6	9.0	2.6	9.8	

© Diodes Incorporated

Switching Characteristics (cont.)

Symbol / Parameter	Pins	Test Conditions	V_{CC}	T_A = +25°C			-40°C°C to +85°C		-40°C°C to +125°C		Unit
				Min	Typ	Max	Min	Max	Min	Max	
t_{PHLH} HIGH to LOW Propagation Delay	SHCP toQ7S	Figure 1 C_L = 15pF	3.0V to 3.6V	–	5.5	8.9	2.3	10.2	2.3	11.0	ns
			4.5V to 5.5V	–	4.1	6.7	1.9	7.6	1.9	8.2	
		Figure 1 C_L = 50pF	3.0V to 3.6V	–	7.4	12.1	3.0	13.9	3.0	15.1	
			4.5V to 5.5V	–	5.4	8.8	2.5	10.1	2.5	11.0	
	STCP to Qn	Figure 1 C_L = 15pF	3.0V to 3.6V	–	5.5	9.1	2.4	10.4	2.4	11.3	ns
			4.5V to 5.5V	–	3.7	6.0	1.9	6.9	1.9	7.5	
		Figure 1 C_L = 50pF	3.0V to 3.6V	–	7.3	12.0	3.2	13.8	3.2	15.0	
			4.5V to 5.5V	–	5.2	8.5	2.6	9.7	2.6	10.5	
	$\overline{SHR}$ to Q7S	Figure 1 C_L = 15pF	3.0V to 3.6V	–	5.7	9.5	2.3	10.8	2.3	11.7	ns
			4.5V to 5.5V	–	4.1	6.7	2.0	7.6	2.0	8.2	
		Figure 1 C_L = 50pF	3.0V to 3.6V	–	7.5	12.2	3.6	14.0	3.6	15.2	
			4.5V to 5.5V	–	5.4	8.8	2.8	10.1	2.8	11.0	
	$\overline{STR}$ to Qn	Figure 1 C_L = 15pF	3.0V to 3.6V	–	4.1	7.2	2.2	8.2	2.2	8.9	ns
			4.5V to 5.5V	–	4.1	7.2	2.2	8.2	2.2	8.9	
		Figure 1 C_L = 50pF	3.0V to 3.6V	–	5.4	9.4	3.0	10.7	3.0	11.6	
			4.5V to 5.5V	–	5.4	9.4	3.0	10.7	3.0	11.6	
t_{PHL} Propagation Delay	$\overline{SHR}$ to Q7S	Figure 1	2.0V	–	39	150	–	185	–	225	ns
			4.5V	–	14	30	–	37	–	45	
			5.0V	–	11	–	–	–	–	–	
			6.0V	–	12	26	–	31	–	38	
	$\overline{STR}$ to Qn	Figure 1	2.0V	–	39	125	–	155	–	185	ns
			4.5V	–	14	25	–	31	–	37	
			5.0V	–	11	–	–	–	–	–	
			6.0V	–	12	21	–	26	–	31	
t_{THL} Transition Time	Serial data output Q7S	Figure 1	2.0V	–	19	75	–	95	–	110	ns
			4.5V	–	7	15	–	19	–	22	
			6.0V	–	6	13	–	16	–	19	
	Parallel Data Outputs Q_N	Figure 1	2.0V	–	14	60	–	75	–	90	ns
			4.5V	–	5	12	–	15	–	18	
			6.0V	–	4	10	–	13	–	15	

Operating Characteristics (@T_A = +25°C, unless otherwise specified.)

Parameter		Test Conditions	V_{CC} = 5V	Unit
			Typ	
C_{pd}	Power dissipation capacitance	f = 1 MHz all outputs switching-no load	51	pF

© Diodes Incorporated

Parameter Measurement Information

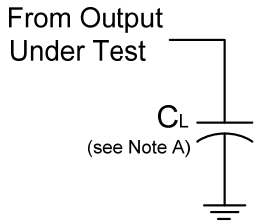

V_{CC}	Inputs		V_M
	V_I	t_r/t_f	
4.5V	V_{CC}	6ns	$V_{CC}/2$
5.0V	V_{CC}	6ns	$V_{CC}/2$

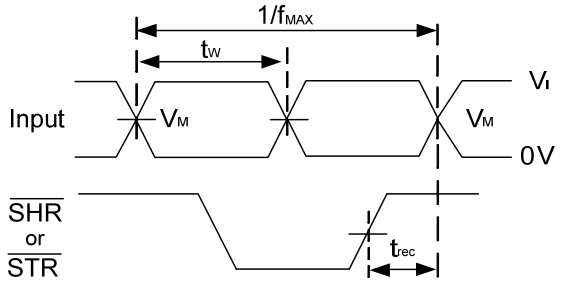

Voltage Waveform
Pulse Duration and Recovery Time

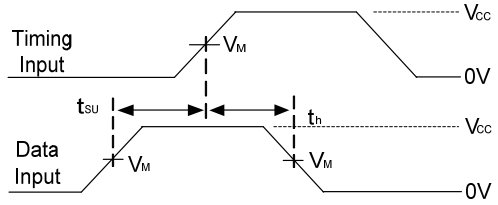

Voltage Waveform
Set-up and Hold Times

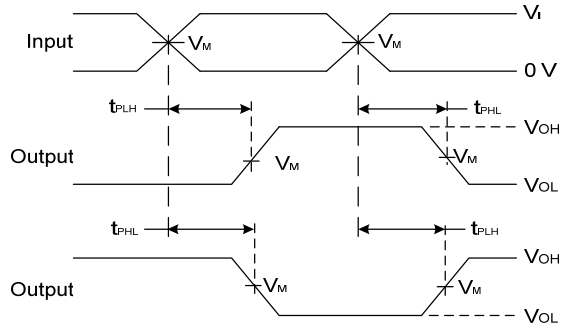

Voltage Waveform
Propagation Delay Times
Inverting and Non Inverting Outputs

Notes:
A. Includes test lead and test apparatus capacitance.
B. All pulses are supplied at pulse repetition rate ≤ 10MHz.
C. Inputs are measured separately one transition per measurement.
D. t_{PLH} and t_{PHL} are the same as t_{PD}.

Figure 1 Load Circuit and Voltage Waveforms

© Diodes Incorporated

Ordering Information

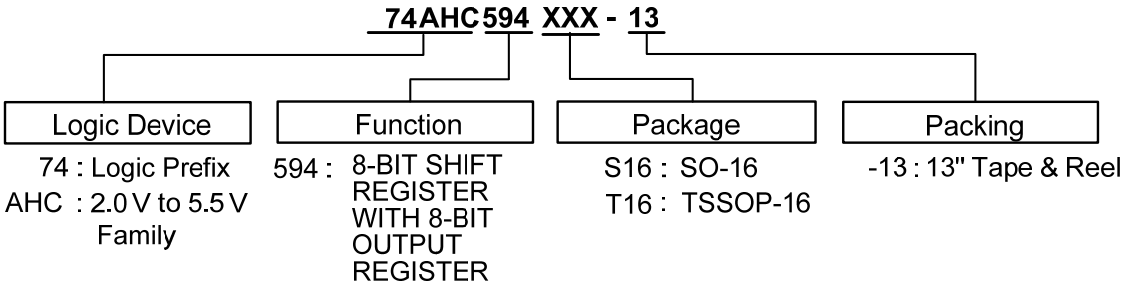

Part Number	Package Code	Packaging	7" Tape and Reel (Note 6)	
			Quantity	Part Number Suffix
74AHC594S16-13	S16	SO-16	2500/Tape & Reel	-13
74AHC594T16-13	T16	TSSOP-16	2500/Tape & Reel	-13

Note: 6. The taping orientation is located on our website at http://www.diodes.com/datasheets/ap02007.pdf

Marking Information

(1) SO-16, TSSOP16

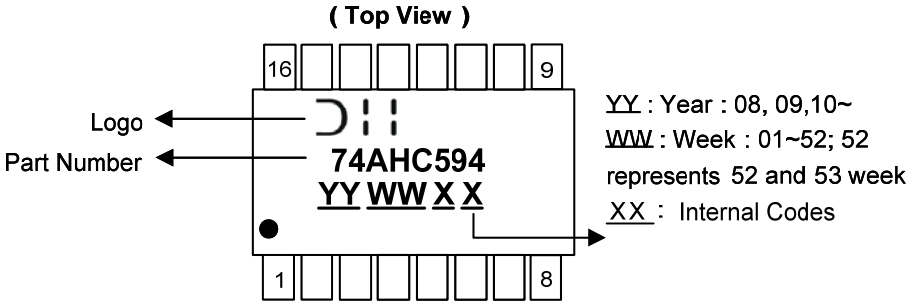

Part Number	Package
74AHC594S16	SO-16
74AHC594T16	TSSOP-16

© Diodes Incorporated

Package Outline Dimensions (All dimensions in mm.)

Please see AP02002 at http://www.diodes.com/datasheets/ap02002.pdf for latest version.

Package Type: SO-16

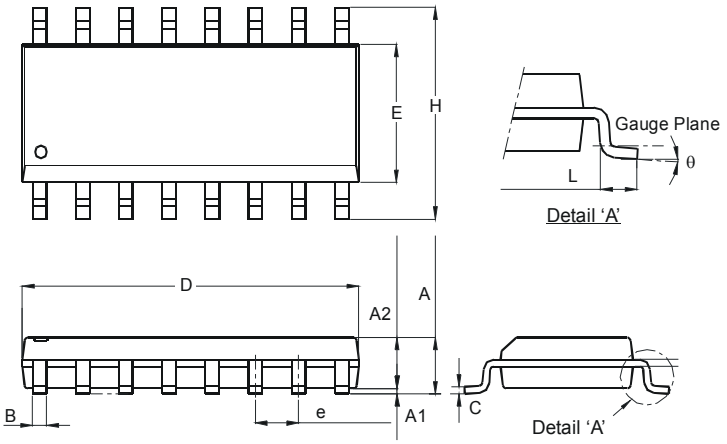

SO-16		
Dim	**Min**	**Max**
A	1.40	1.75
A1	0.10	0.25
A2	1.30	1.50
B	0.33	0.51
C	0.19	0.25
D	9.80	10.00
E	3.80	4.00
e	1.27 Typ	
H	5.80	6.20
L	0.38	1.27
Θ	0°	8°
All Dimensions in mm		

Package Type: TSSOP-16

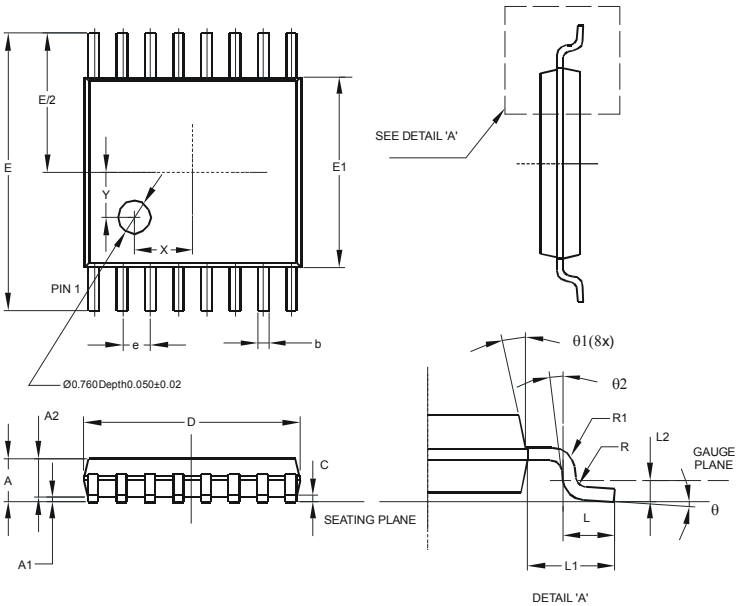

TSSOP-16			
Dim	**Min**	**Max**	**Typ**
A	-	1.08	-
A1	0.05	0.15	-
A2	0.80	0.93	-
b	0.19	0.30	-
c	0.09	0.20	-
D	4.90	5.10	-
E	6.40 BSC		
E1	4.30	4.50	-
e	0.65 BSC		
L	0.45	0.75	-
L1	1.00 REF		
L2	0.25 BSC		
R	0.09	-	-
R1	0.09	-	-
X	-	-	1.350
Y	-	-	1.050
Θ	0°	8°	-
Θ1	5°	15°	-
Θ2	0°	-	-
All Dimensions in mm			

© Diodes Incorporated

Suggested Pad Layout

Please see AP02001 at http://www.diodes.com/datasheets/ap02001.pdf for the latest version.

Package Type: SO-16

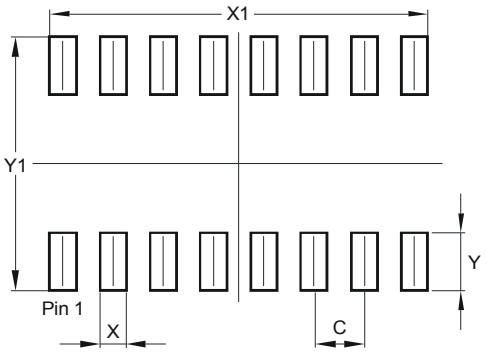

Dimensions	Value (in mm)
C	1.270
X	0.670
X1	9.560
Y	1.450
Y1	6.400

Package Type: TSSOP-16

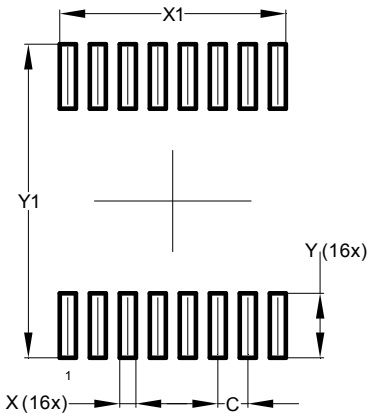

Dimensions	Value (in mm)
C	0.650
X	0.350
X1	4.900
Y	1.400
Y1	6.800

© Diodes Incorporated

IMPORTANT NOTICE

DIODES INCORPORATED MAKES NO WARRANTY OF ANY KIND, EXPRESS OR IMPLIED, WITH REGARDS TO THIS DOCUMENT, INCLUDING, BUT NOT LIMITED TO, THE IMPLIED WARRANTIES OF MERCHANTABILITY AND FITNESS FOR A PARTICULAR PURPOSE (AND THEIR EQUIVALENTS UNDER THE LAWS OF ANY JURISDICTION).

Diodes Incorporated and its subsidiaries reserve the right to make modifications, enhancements, improvements, corrections or other changes without further notice to this document and any product described herein. Diodes Incorporated does not assume any liability arising out of the application or use of this document or any product described herein; neither does Diodes Incorporated convey any license under its patent or trademark rights, nor the rights of others. Any Customer or user of this document or products described herein in such applications shall assume all risks of such use and will agree to hold Diodes Incorporated and all the companies whose products are represented on Diodes Incorporated website, harmless against all damages.

Diodes Incorporated does not warrant or accept any liability whatsoever in respect of any products purchased through unauthorized sales channel.
Should Customers purchase or use Diodes Incorporated products for any unintended or unauthorized application, Customers shall indemnify and hold Diodes Incorporated and its representatives harmless against all claims, damages, expenses, and attorney fees arising out of, directly or indirectly, any claim of personal injury or death associated with such unintended or unauthorized application.

Products described herein may be covered by one or more United States, international or foreign patents pending. Product names and markings noted herein may also be covered by one or more United States, international or foreign trademarks.

This document is written in English but may be translated into multiple languages for reference. Only the English version of this document is the final and determinative format released by Diodes Incorporated.

LIFE SUPPORT

Diodes Incorporated products are specifically not authorized for use as critical components in life support devices or systems without the express written approval of the Chief Executive Officer of Diodes Incorporated. As used herein:

A. Life support devices or systems are devices or systems which:

1. are intended to implant into the body, or
2. support or sustain life and whose failure to perform when properly used in accordance with instructions for use provided in the labeling can be reasonably expected to result in significant injury to the user.

B. A critical component is any component in a life support device or system whose failure to perform can be reasonably expected to cause the failure of the life support device or to affect its safety or effectiveness.

Customers represent that they have all necessary expertise in the safety and regulatory ramifications of their life support devices or systems, and acknowledge and agree that they are solely responsible for all legal, regulatory and safety-related requirements concerning their products and any use of Diodes Incorporated products in such safety-critical, life support devices or systems, notwithstanding any devices- or systems-related information or support that may be provided by Diodes Incorporated. Further, Customers must fully indemnify Diodes Incorporated and its representatives against any damages arising out of the use of Diodes Incorporated products in such safety-critical, life support devices or systems.

Copyright © 2013, Diodes Incorporated

www.diodes.com

Компания «ЭлектроПласт» предлагает заключение долгосрочных отношений при поставках импортных электронных компонентов на взаимовыгодных условиях!

Наши преимущества:

- Оперативные поставки широкого спектра электронных компонентов отечественного и импортного производства напрямую от производителей и с крупнейших мировых складов;
- Поставка более 17-ти миллионов наименований электронных компонентов;
- Поставка сложных, дефицитных, либо снятых с производства позиций;
- Оперативные сроки поставки под заказ (от 5 рабочих дней);
- Экспресс доставка в любую точку России;
- Техническая поддержка проекта, помощь в подборе аналогов, поставка прототипов;
- Система менеджмента качества сертифицирована по Международному стандарту ISO 9001;
- Лицензия ФСБ на осуществление работ с использованием сведений, составляющих государственную тайну;
- Поставка специализированных компонентов (Xilinx, Altera, Analog Devices, Intersil, Interpoint, Microsemi, Aeroflex, Peregrine, Syfer, Eurofarad, Texas Instrument, Miteq, Cobham, E2V, MA-COM, Hittite, Mini-Circuits,General Dynamics и др.);

Помимо этого, одним из направлений компании «ЭлектроПласт» является направление «Источники питания». Мы предлагаем Вам помощь Конструкторского отдела:

- Подбор оптимального решения, техническое обоснование при выборе компонента;
- Подбор аналогов;
- Консультации по применению компонента;
- Поставка образцов и прототипов;
- Техническая поддержка проекта;
- Защита от снятия компонента с производства.

Как с нами связаться

Телефон: 8 (812) 309 58 32 (многоканальный)
Факс: 8 (812) 320-02-42
Электронная почта: org@eplast1.ru
Адрес: 198099, г. Санкт-Петербург, ул. Калинина, дом 2, корпус 4, литера А.