3 V/5 V, 4/8 Channel High Performance Analog Multiplexers

ADG608/ADG609

FEATURES

+3 V, +5 V, ±5 V Power Supplies
V_{SS} to V_{DD} Analog Signal Range
Low On Resistance (30 Ω max)
Fast Switching Times
  t_{ON} 75 ns max
  t_{OFF} 45 ns max
Low Power Dissipation (1.5 μW max)
Break-Before-Make Construction
ESD > 5000 V as per Military Standard 3015.7
TTL and CMOS Compatible Inputs

APPLICATIONS

Automatic Test Equipment
Data Acquisition Systems
Communication Systems
Avionics and Military Systems
Microprocessor Controlled Analog Systems
Medical Instrumentation
Battery Powered Instruments
Remote Powered Equipment
Compatible with ±5 V DACs and ADCs such as AD7840/8, AD7870/1/2/4/5/6/8

GENERAL DESCRIPTION

The ADG608 and ADG609 are monolithic CMOS analog multiplexers comprising eight single channels and four differential channels respectively, fully specified for ±5 V, +5 V and +3 V power supplies. The ADG608 switches one of eight inputs to a common output as determined by the 3-bit binary address lines A0, A1 and A2. The ADG609 switches one of four differential inputs to a common differential output as determined by the 2-bit binary address lines A0 and A1. An EN input on both devices is used to enable or disable the device. When disabled, all channels are switched OFF. All the address and enable inputs are TTL compatible over the full specified operating temperature range, making the parts suitable for bus-controlled systems such as data acquisition systems, process controls, avionics and ATEs since the TTL compatible address inputs simplify the digital interface design and reduce the board space requirements.

The ADG608/ADG609 are designed on an enhanced LC^{2}MOS process that provides low power dissipation yet gives high switching speed and low on resistance. Each channel conducts equally well in both directions when ON and has an input signal range which extends to the supplies. In the OFF condition, signal levels up to the supplies are blocked. All channels exhibit break-before-make switching action preventing momentary shorting when switching channels. Inherent in the design is low charge injection for minimum transients when switching the digital inputs.

FUNCTIONAL BLOCK DIAGRAMS

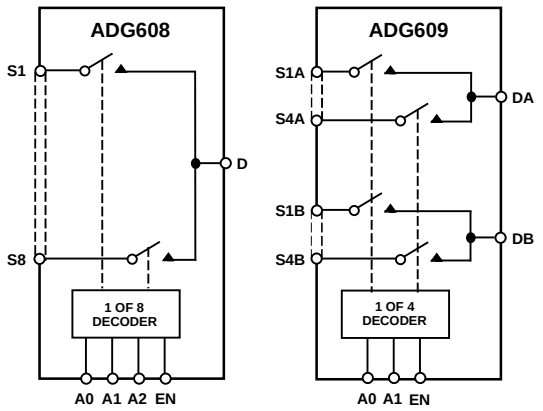

The ability to operate from single +3 V, +5 V or ±5 V bipolar supplies makes the ADG608 and ADG609 perfect for use in battery operated instruments and with the new generation of DACs and ADCs from Analog Devices. The use of 5 V supplies and reduced operating currents gives much lower power dissipation than devices operating from ±15 V supplies.

PRODUCT HIGHLIGHTS

1. Extended Signal Range
   The ADG608/ADG609 are fabricated on an enhanced LC^{2}MOS process giving an increased signal range which extends to the supplies.
2. Low Power Dissipation
3. Low R_{ON}
4. Fast Switching Times
5. Break-Before-Make Switching
   Switches are guaranteed break-before-make so that input signals are protected against momentary shorting.
6. Single/Dual Supply Operation

ORDERING GUIDE

Model	Temperature Range	Package Option*
ADG608BN	–40°C to +85°C	N-16
ADG608BR	–40°C to +85°C	R-16A
ADG608BRU	–40°C to +85°C	RU-16
ADG608TRU	–55°C to +125°C	RU-16
ADG609BN	–40°C to +85°C	N-16
ADG609BR	–40°C to +85°C	R-16A
ADG609BRU	–40°C to +85°C	RU-16

*N = Plastic DIP; RU = Thin Shrink Small Outline Package (TSSOP); R = 0.15" Small Outline IC (SOIC).

REV. A

Information furnished by Analog Devices is believed to be accurate and reliable. However, no responsibility is assumed by Analog Devices for its use, nor for any infringements of patents or other rights of third parties which may result from its use. No license is granted by implication or otherwise under any patent or patent rights of Analog Devices.

© Analog Devices, Inc., 1995

One Technology Way, P.O. Box 9106, Norwood, MA 02062-9106, U.S.A.
Tel: 617/329-4700 **Fax: 617/326-8703**

ADG608/ADG609–SPECIFICATIONS

DUAL SUPPLY[1] (V_{DD} = +5 V ± 10%, V_{SS} = –5 V ± 10%, GND = 0 V, unless otherwise noted)

Parameter	B Version +25°C	B Version –40°C to +85°C	T Version +25°C	T Version –55°C to +125°C	Units	Test Conditions/ Comments
ANALOG SWITCH						
Analog Signal Range		V_{SS} to V_{DD}		V_{SS} to V_{DD}	V	
R_{ON}	22		22		Ω typ	–3.5 V ≤ V_S ≤ +3.5 V, I_S = –1 mA;
	30	35	30	40	Ω max	V_{DD} = +4.5 V, V_{SS} = –4.5 V; Test Circuit 1
ΔR_{ON}	5	6	5	6	Ω max	–3 V ≤ V_S ≤ +3 V, I_{DS} = –1 mA; V_{DD} = +5 V, V_{SS} = –5 V
R_{ON} Match	2	3	2	3	Ω max	V_S = 0 V, I_{DS} = –1 mA; V_{DD} = +5 V, V_{SS} = –5 V
LEAKAGE CURRENTS						V_{DD} = +5.5 V, V_{SS} = –5.5 V
Source OFF Leakage I_S (OFF)	±0.05		±0.05		nA typ	V_D = ±4.5 V, V_S = ∓4.5 V;
	±0.5	±2	±0.5	±10	nA max	Test Circuit 2
Drain OFF Leakage I_D (OFF)	±0.05		±0.05		nA typ	V_D = ±4.5 V, V_S = ∓4.5 V;
ADG608	±0.5	±2	±0.5	±10	nA max	Test Circuit 3
ADG609	±0.5	±1	±0.5	±5	nA max	
Channel ON Leakage I_D, I_S (ON)	±0.05		±0.05		nA typ	V_S = V_D = ±4.5 V;
ADG608	±0.5	±3	±0.5	±20	nA max	Test Circuit 4
ADG609	±0.5	±1.5	±0.5	±10	nA max	
DIGITAL INPUTS						
Input High Voltage, V_{INH}		2.4		2.4	V min	
Input Low Voltage, V_{INL}		0.8		0.8	V max	
Input Current						
I_{INL} or I_{INH}		±1		±1	µA max	V_{IN} = 0 or V_{DD}
C_{IN}, Digital Input Capacitance	5		5		pF typ	
DYNAMIC CHARACTERISTICS[2]						
$t_{TRANSITION}$	50		50		ns typ	R_L = 300 Ω, C_L = 35 pF;
	75	90	75	100	ns max	V_{S1} = ±3.5 V, V_{S8} = ∓3.5 V; Test Circuit 5
t_{OPEN}	10		10		ns min	R_L = 300 Ω, C_L = 35 pF; V_S = +3.5 V; Test Circuit 6
t_{ON} (EN)	50		50		ns typ	R_L = 300 Ω, C_L = 35 pF;
	75	90	75	100	ns max	V_S = +3.5 V; Test Circuit 7
t_{OFF} (EN)	30		30		ns typ	R_L = 300 Ω, C_L = 35 pF;
	45	60	45	75	ns max	V_S = +3.5 V; Test Circuit 7
Charge Injection	6		6		pC typ	V_S = 0 V, R_S = 0 Ω, C_L = 1 nF; Test Circuit 8
OFF Isolation	85		85		dB typ	R_L = 1 kΩ, C_L = 15 pF, f = 100 kHz; V_S = 3 V rms; Test Circuit 9
Channel-to-Channel Crosstalk	85		85		dB typ	R_L = 1 kΩ, C_L = 15 pF, f = 100 kHz; Test Circuit 10
C_S (OFF)	9		9		pF typ	
C_D (OFF)						
ADG608	40		40		pF typ	
ADG609	20		20		pF typ	
C_D (ON)						
ADG608	54		54		pF typ	
ADG609	34		34		pF typ	
POWER REQUIREMENTS						
I_{DD}	0.05	0.2	0.05	0.2	µA typ	V_{IN} = 0 V or V_{DD}
	0.2	2	0.2	2	µA max	
I_{SS}	0.01	0.1	0.01	0.1	µA typ	
	0.1	1	0.1	1	µA max	

NOTES
[1]Temperature ranges are as follows: B Version: –40°C to +85°C; T Version: –55°C to +125°C.
[2]Guaranteed by design, not subject to production test.
Specifications subject to change without notice.

SINGLE SUPPLY[1] (V_{DD} = +5 V ± 10%, V_{SS} = 0 V, GND = 0 V, unless otherwise noted)

Parameter	B Version +25°C	B Version –40°C to +85°C	T Version +25°C	T Version –55°C to +125°C	Units	Test Conditions/ Comments
ANALOG SWITCH						
Analog Signal Range		0 to V_{DD}		0 to V_{DD}	V	
R_{ON}	40		40		Ω typ	V_S = +3.5 V, I_S = –1 mA;
	50	60	50	70	Ω max	V_{DD} = +4.5 V; Test Circuit 1
ΔR_{ON}	5	6	5	6	Ω max	+1 V ≤ V_S ≤ +3 V, I_{DS} = –1 mA; V_{DD} = +5 V
R_{ON} Match	2	3	2	3	Ω max	V_S = 0 V, I_{DS} = –1 mA; V_{DD} = +5 V
LEAKAGE CURRENTS						V_{DD} = +5.5 V
Source OFF Leakage I_S (OFF)	±0.05		±0.05		nA typ	V_D = 4.5 V/0.1 V, V_S = 0.1 V/4.5 V;
	±0.5	±2	±0.5	±10	nA max	Test Circuit 2
Drain OFF Leakage I_D (OFF)	±0.05		±0.05		nA typ	V_D = 4.5 V/0.1 V, V_S = 0.1 V/4.5 V;
ADG608	±0.5	±2	±0.5	±10	nA max	Test Circuit 3
ADG609	±0.5	±1	±0.5	±5	nA max	
Channel ON Leakage I_D, I_S (ON)	±0.05		±0.05		nA typ	V_S = V_D = 4.5 V/0.1 V;
ADG608	±0.5	±3	±0.5	±20	nA max	Test Circuit 4
ADG609	±0.5	±1.5	±0.5	±10	nA max	
DIGITAL INPUTS						
Input High Voltage, V_{INH}		2.4		2.4	V min	
Input Low Voltage, V_{INL}		0.8		0.8	V max	
Input Current						
I_{INL} or I_{INH}		±1		±1	µA max	V_{IN} = 0 or V_{DD}
C_{IN}, Digital Input Capacitance	5		5		pF typ	
DYNAMIC CHARACTERISTICS[2]						
$t_{TRANSITION}$	80		80		ns typ	R_L = 300 Ω, C_L = 35 pF;
	100	130	100	150	ns max	V_{S1} = 3.5 V/0 V, V_{S8} = 0 V/3.5 V; Test Circuit 5
t_{OPEN}	10		10		ns min	R_L = 300 Ω, C_L = 35 pF; V_S = +3.5 V; Test Circuit 6
t_{ON} (EN)	80		80		ns typ	R_L = 300 Ω, C_L = 35 pF;
	100	130	100	150	ns max	V_S = +3.5 V; Test Circuit 7
t_{OFF} (EN)	40		40		ns typ	R_L = 300 Ω, C_L = 35 pF;
	50	60	50	75	ns max	V_S = +3.5 V; Test Circuit 7
Charge Injection	0.5		0.5		pC typ	V_S = 0 V, R_S = 0 Ω, C_L = 1 nF;
	3		3		pC max	Test Circuit 8
OFF Isolation	85		85		dB typ	R_L = 1 kΩ, C_L = 15 pF, f = 100 kHz; V_S = 1.5 V rms; Test Circuit 9
Channel-to-Channel Crosstalk	85		85		dB typ	R_L = 1 kΩ, C_L = 15 pF, f = 100 kHz; Test Circuit 10
C_S (OFF)	9		9		pF typ	
C_D (OFF)						
ADG608	40		40		pF typ	
ADG609	20		20		pF typ	
C_D (ON)						
ADG608	54		54		pF typ	
ADG609	34		34		pF typ	
POWER REQUIREMENTS						
I_{DD}	0.05	0.2	0.05	0.2	µA typ	V_{IN} = 0 V or V_{DD}
	0.2	2	0.2	2	µA max	

NOTES
[1]Temperature ranges are as follows: B Version: –40°C to +85°C; T Version: –55°C to +125°C.
[2]Guaranteed by design, not subject to production test.
Specifications subject to change without notice.

ADG608/ADG609–SPECIFICATIONS

SINGLE SUPPLY[1] (V_{DD} = +3.3 V ± 10%, V_{SS} = 0 V, GND = 0 V, unless otherwise noted)

Parameter	B Version +25°C	B Version –40°C to +85°C	T Version +25°C	T Version –55°C to +125°C	Units	Test Conditions/ Comments
ANALOG SWITCH						
Analog Signal Range		0 to V_{DD}		0 to V_{DD}	V	
R_{ON}	60		60		Ω typ	V_S = +1.5 V, I_S = –1 mA;
	90	100	90	120	Ω max	V_{DD} = +3 V; Test Circuit 1
R_{ON} Match	3	3	3	3	Ω max	V_S = 0 V, I_{DS} = –1 mA, V_{DD} = +3.3 V
LEAKAGE CURRENTS						V_{DD} = +3.6 V
Source OFF Leakage I_S (OFF)	±0.05		±0.05		nA typ	V_D = 2.6 V/0.1 V, V_S = 0.1 V/2.6 V;
	±0.5	±2	±0.5	±10	nA max	Test Circuit 2
Drain OFF Leakage I_D (OFF)	±0.05		±0.05		nA typ	V_D = 2.6 V/0.1 V, V_S = 0.1 V/2.6 V;
ADG608	±0.5	±2	±0.5	±10	nA max	Test Circuit 3
ADG609	±0.5	±1	±0.5	±5	nA max	
Channel ON Leakage I_D, I_S (ON)	±0.05		±0.05		nA typ	V_S = V_D = 2.6 V/0.1 V;
ADG608	±0.5	±3	±0.5	±20	nA max	Test Circuit 4
ADG609	±0.5	±1.5	±0.5	±10	nA max	
DIGITAL INPUTS						
Input High Voltage, V_{INH}		2.4		2.4	V min	
Input Low Voltage, V_{INL}		0.8		0.8	V max	
Input Current						
I_{INL} or I_{INH}		±1		±1	µA max	V_{IN} = 0 or V_{DD}
C_{IN}, Digital Input Capacitance	5		5		pF typ	
DYNAMIC CHARACTERISTICS[2]						
$t_{TRANSITION}$	120		120		ns typ	R_L = 300 Ω, C_L = 35 pF;
	170	225	170	250	ns max	V_{S1} = 1.5 V/0 V, V_{S8} = 0 V/1.5 V; Test Circuit 5
t_{OPEN}	10		10		ns min	R_L = 300 Ω, C_L = 35 pF; V_S = +1.5 V; Test Circuit 6
t_{ON} (EN)	120		120		ns typ	R_L = 300 Ω, C_L = 35 pF;
	170	225	170	250	ns max	V_S = +1.5 V; Test Circuit 7
t_{OFF} (EN)	40		40		ns typ	R_L = 300 Ω, C_L = 35 pF;
	60	75	60	90	ns max	V_S = +1.5 V; Test Circuit 7
Charge Injection	0.5		0.5		pC typ	V_S = 0 V, R_S = 0 Ω, C_L = 1 nF;
	3		3		pC max	Test Circuit 8
OFF Isolation	85		85		dB typ	R_L = 1 kΩ, C_L = 15 pF, f = 100 kHz; V_S = 1 V rms; Test Circuit 9
Channel-to-Channel Crosstalk	85		85		dB typ	R_L = 1 kΩ, C_L = 15 pF, f = 100 kHz; Test Circuit 10
C_S (OFF)	9		9		pF typ	
C_D (OFF)						
ADG608	40		40		pF typ	
ADG609	20		20		pF typ	
C_D (ON)						
ADG608	54		54		pF typ	
ADG609	34		34		pF typ	
POWER REQUIREMENTS						
I_{DD}	0.05	0.2	0.05	0.2	µA typ	V_{IN} = 0 V or V_{DD}
	0.2	2	0.2	2	µA max	

NOTES
[1]Temperature ranges are as follows: B Version: –40°C to +85°C; T Version: –55°C to +125°C.
[2]Guaranteed by design, not subject to production test.
Specifications subject to change without notice.

ABSOLUTE MAXIMUM RATINGS[1]

(T_A = +25°C unless otherwise noted)

V_{DD} to V_{SS} . . . . . +13 V
V_{DD} to GND . . . . . –0.3 V to +6.5 V
V_{SS} to GND . . . . . +0.3 V to –6.5 V
Analog, Digital Inputs[2] . . . . . –0.3 V to V_{DD} + 2 V
or 20 mA, Whichever Occurs First
Continuous Current, S or D . . . . . 20 mA
Peak Current, S or D
(Pulsed at 1 ms, 10% Duty Cycle Max) . . . . . 40 mA
Operating Temperature Range
Industrial (B Version) . . . . . –40°C to +85°C
Extended (T Version) . . . . . –55°C to +125°C
Storage Temperature Range . . . . . –65°C to +150°C
Junction Temperature . . . . . +150°C
Plastic DIP Package
θ_{JA}, Thermal Impedance . . . . . 117°C/W
Lead Temperature, Soldering (10 sec) . . . . . +260°C
SOIC Package
θ_{JA}, Thermal Impedance . . . . . 77°C/W
Lead Temperature, Soldering
Vapor Phase (60 sec) . . . . . +215°C
Infrared (15 sec) . . . . . +220°C
TSSOP Package
θ_{JA}, Thermal Impedance . . . . . 158°C/W
Lead Temperature, Soldering
Vapor Phase (60 sec) . . . . . +215°C
Infrared (15 sec) . . . . . +220°C
ESD Rating . . . . . >5000 V

NOTES

[1]Stresses above those listed under "Absolute Maximum Ratings" may cause permanent damage to the device. This is a stress rating only and functional operation of the device at these or any other conditions above those listed in the operational sections of this specification is not implied. Exposure to absolute maximum rating conditions for extended periods may affect device reliability. Only one absolute maximum rating may be applied at any one time.

[2]Overvoltages at A, S, D or EN will be clamped by internal diodes. Current should be limited to the maximum ratings given.

Table I. ADG608 Truth Table

A2	A1	A0	EN	ON SWITCH
X	X	X	0	NONE
0	0	0	1	1
0	0	1	1	2
0	1	0	1	3
0	1	1	1	4
1	0	0	1	5
1	0	1	1	6
1	1	0	1	7
1	1	1	1	8

X = Don't Care

Table II. ADG609 Truth Table

A1	A0	EN	ON SWITCH PAIR
X	X	0	NONE
0	0	1	1
0	1	1	2
1	0	1	3
1	1	1	4

X = Don't Care

PIN CONFIGURATIONS

DIP/SOIC/TSSOP

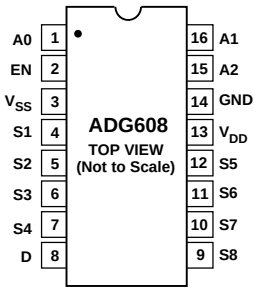

DIP/SOIC/TSSOP

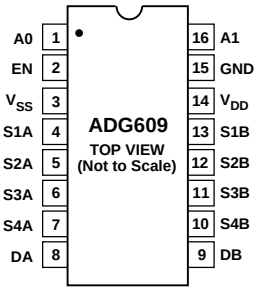

ADG608/ADG609–Typical Performance Characteristics

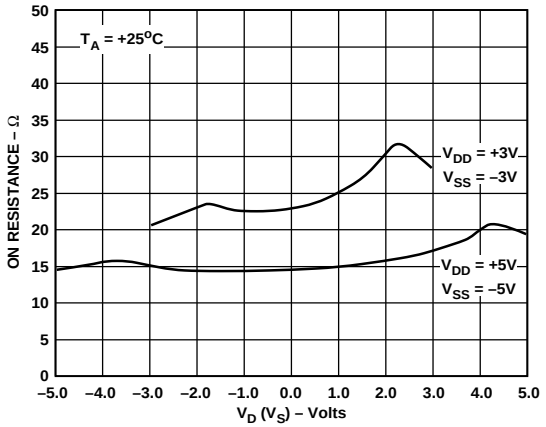

Figure 1. R_{ON} as a Function of V_D (V_S): Dual Supply Voltage

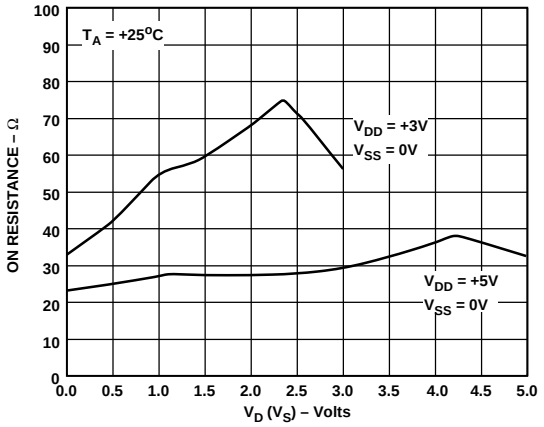

Figure 4. R_{ON} as a Function of V_D (V_S): Single Supply Voltage

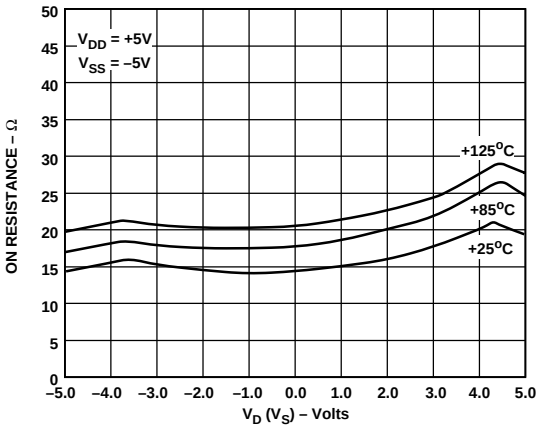

Figure 2. R_{ON} as a Function of V_D (V_S) for Different Temperatures

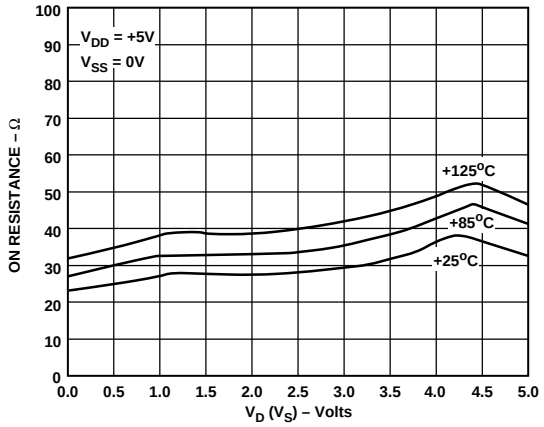

Figure 5. R_{ON} as a Function of V_D (V_S) for Different Temperatures

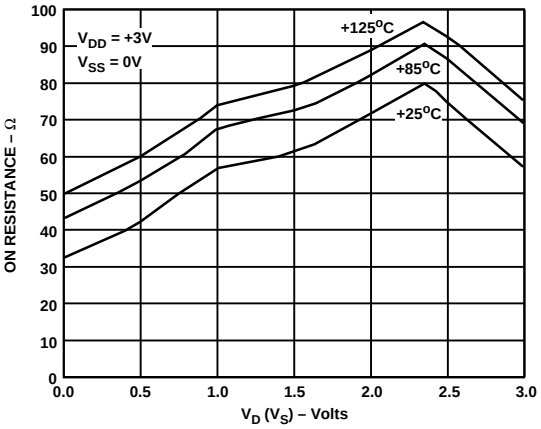

Figure 3. R_{ON} as a Function of V_D (V_S) for Different Temperatures

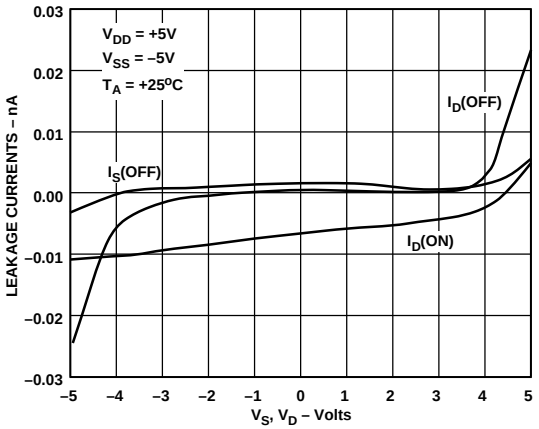

Figure 6. Leakage Currents as a Function of V_D (V_S)

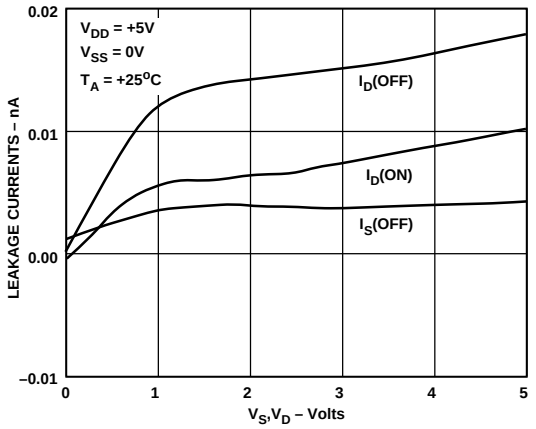

Figure 7. Leakage Currents as a Function of V_D (V_S)

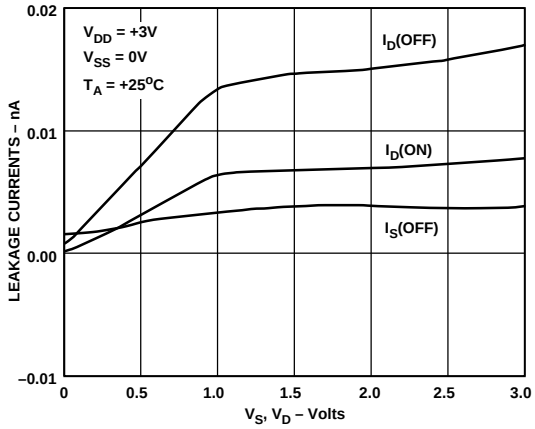

Figure 10. Leakage Currents as a Function of V_D (V_S)

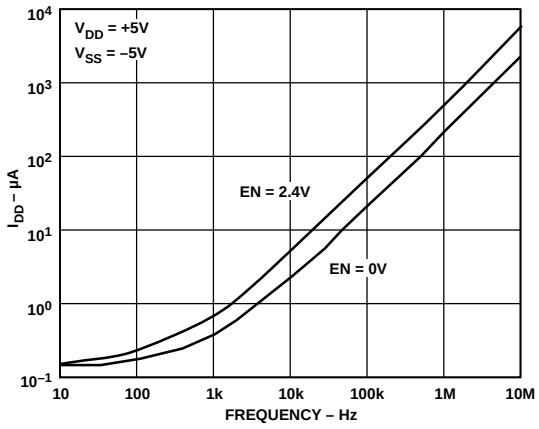

Figure 8. Positive Supply Current vs. Switching Frequency

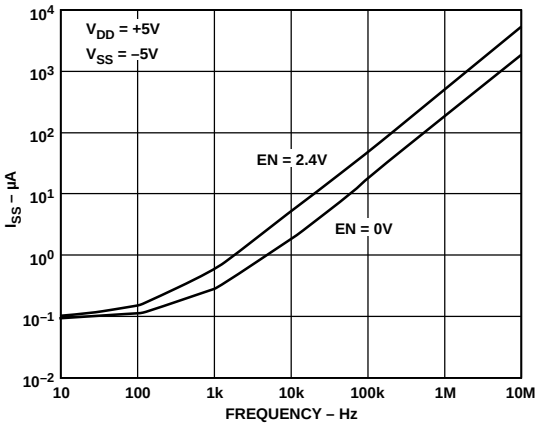

Figure 11. Negative Supply Current vs. Switching Frequency

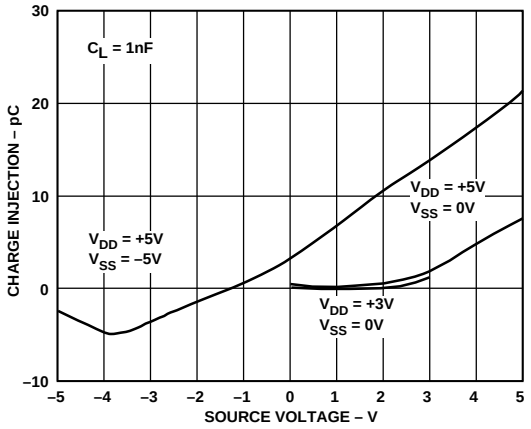

Figure 9. Charge Injection vs. Analog Voltage V_S

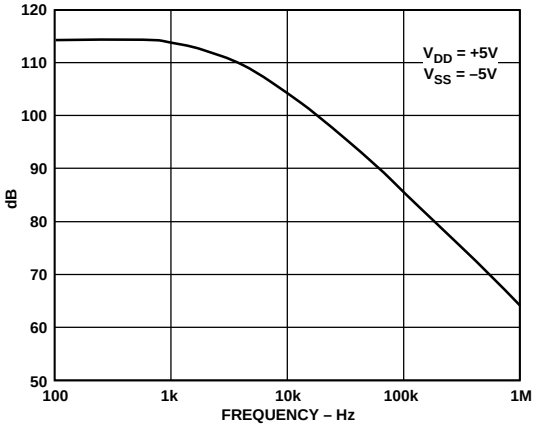

Figure 12. Crosstalk and Off Isolation vs. Frequency

Test Circuits

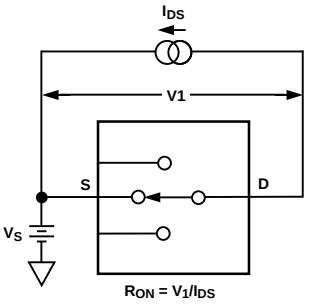

Test Circuit 1. On Resistance

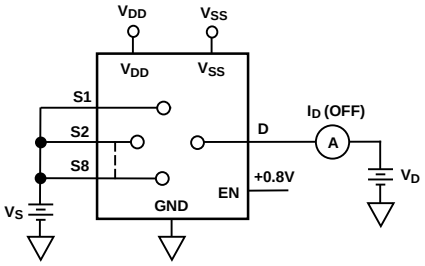

Test Circuit 3. I_D (OFF)

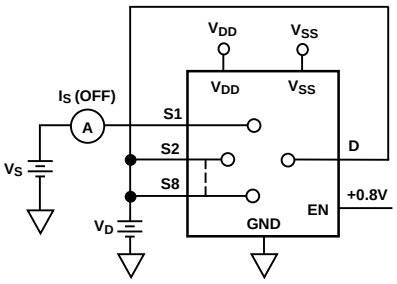

Test Circuit 2. I_S (OFF)

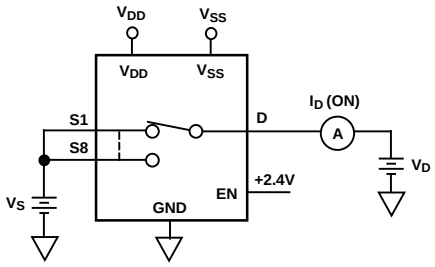

Test Circuit 4. I_D (ON)

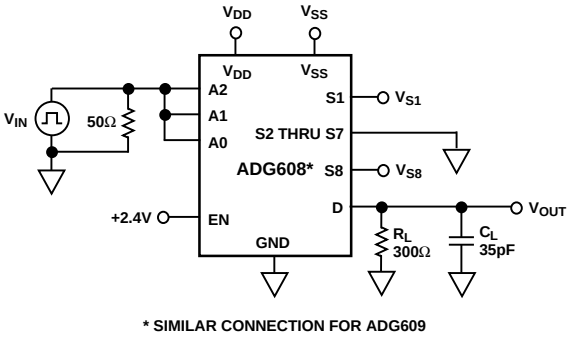

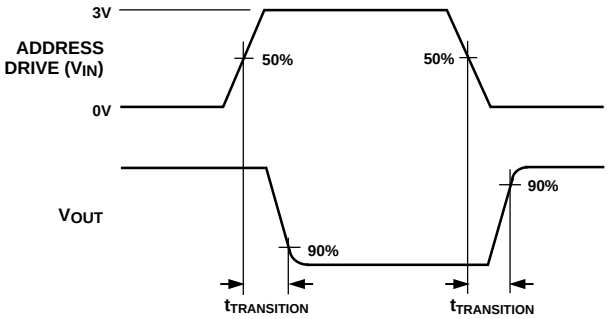

Test Circuit 5. Switching Time of Multiplexer, $t_{TRANSITION}$

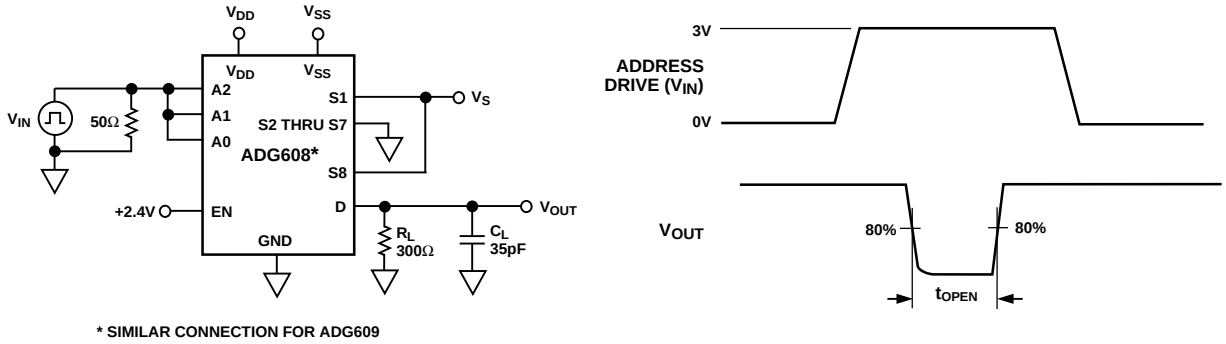

Test Circuit 6. Break-Before-Make Delay, t_{OPEN}

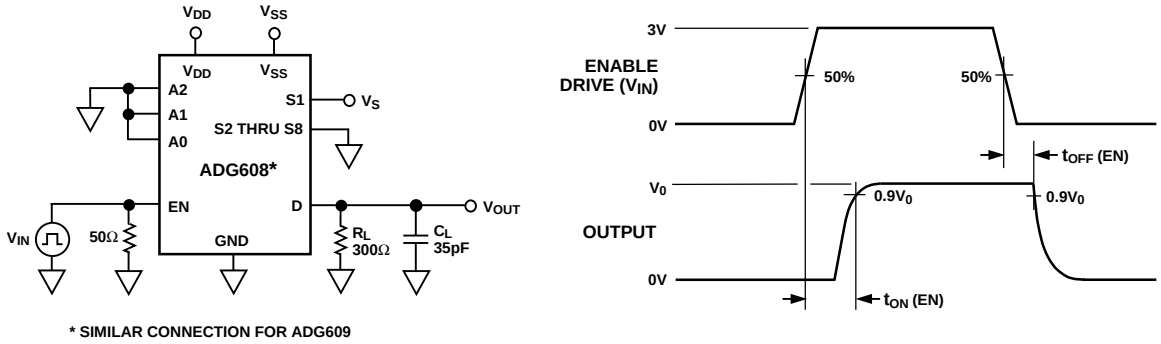

Test Circuit 7. Enable Delay, t_{ON} (EN), t_{OFF} (EN)

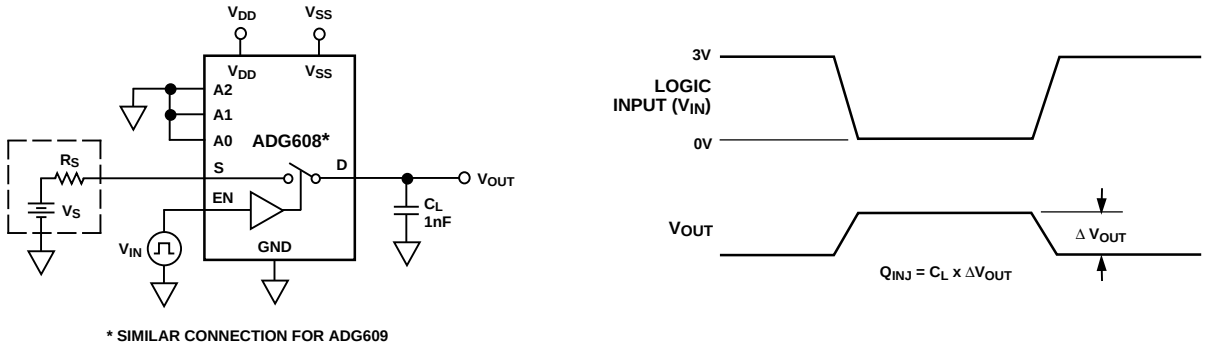

Test Circuit 8. Charge Injection

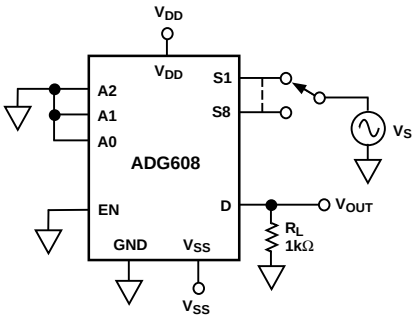

Test Circuit 9. OFF Isolation

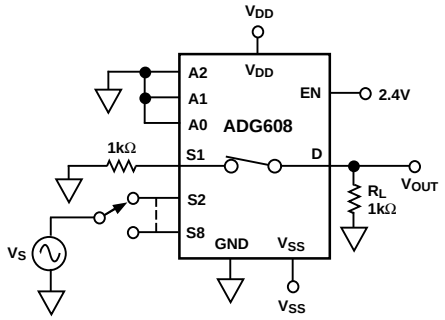

Test Circuit 10. Channel-to-Channel Crosstalk

TERMINOLOGY

V_{DD}	Most positive power supply potential.
V_{SS}	Most negative power supply potential in dual supplies. In single supply applications, it may be connected to ground.
GND	Ground (0 V) reference.
R_{ON}	Ohmic resistance between D and S.
ΔR_{ON}	R_{ON} variation due to a change in the analog input voltage with a constant load current.
R_{ON} Match	Difference between the R_{ON} of any two channels.
I_S (OFF)	Source leakage current when the switch is off.
I_D (OFF)	Drain leakage current when the switch is off.
I_D, I_S (ON)	Channel leakage current when the switch is on.
V_D, V_S	Analog voltage on terminals D, S.
C_S (OFF)	Channel input capacitance for "OFF" condition.
C_D (OFF)	Channel output capacitance for "OFF" condition.
C_D, C_S (ON)	"ON" switch capacitance.
C_{IN}	Digital input capacitance.
t_{ON} (EN)	Delay time between the 50% and 90% points of the digital input and switch "ON" condition.
t_{OFF} (EN)	Delay time between the 50% and 90% points of the digital input and switch "OFF" condition.
$t_{TRANSITION}$	Delay time between the 50% and 90% points of the digital inputs and the switch "ON" condition when switching from one address state to another.
t_{OPEN}	"OFF" time measured between the 80% points of both switches when switching from one address state to another.
V_{INL}	Maximum input voltage for logic "0."
V_{INH}	Minimum input voltage for logic "1."
I_{INL} (I_{INH})	Input current of the digital input.
Crosstalk	A measure of unwanted signal which is coupled through from one channel to another as a result of parasitic capacitance.
Off Isolation	A measure of unwanted signal coupling through an "OFF" channel.
Charge Injection	A measure of the glitch impulse transferred from the digital input to the analog output during switching.
I_{DD}	Positive supply current.
I_{SS}	Negative supply current.

OUTLINE DIMENSIONS

Dimensions shown in inches and (mm).

16-Pin Plastic (N-16)

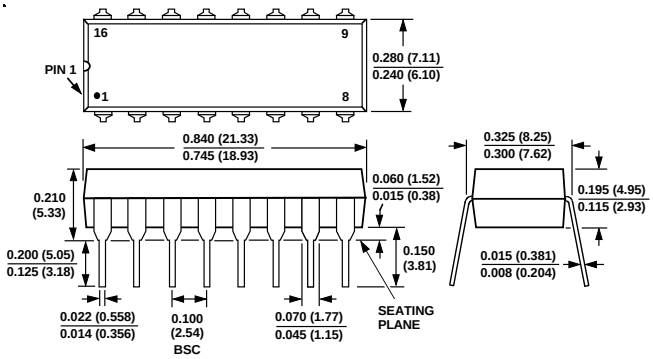

16-Pin SOIC (R-16A)

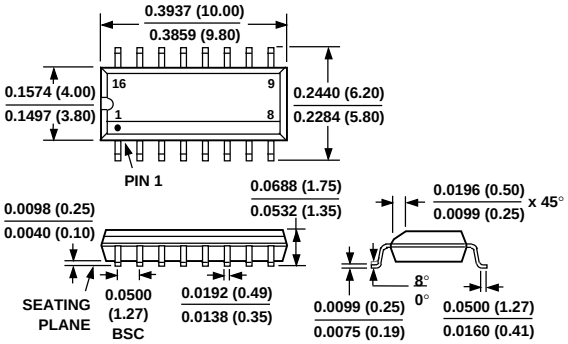

16-Pin TSSOP (RU-16)

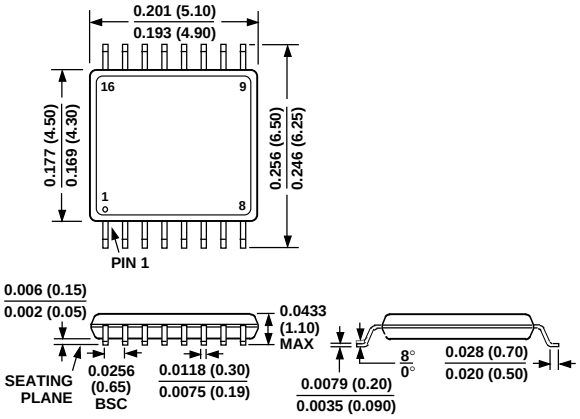

C2021a–18–4/96

PRINTED IN U.S.A.

Компания «ЭлектроПласт» предлагает заключение долгосрочных отношений при поставках импортных электронных компонентов на взаимовыгодных условиях!

Наши преимущества:

- Оперативные поставки широкого спектра электронных компонентов отечественного и импортного производства напрямую от производителей и с крупнейших мировых складов;
- Поставка более 17-ти миллионов наименований электронных компонентов;
- Поставка сложных, дефицитных, либо снятых с производства позиций;
- Оперативные сроки поставки под заказ (от 5 рабочих дней);
- Экспресс доставка в любую точку России;
- Техническая поддержка проекта, помощь в подборе аналогов, поставка прототипов;
- Система менеджмента качества сертифицирована по Международному стандарту ISO 9001;
- Лицензия ФСБ на осуществление работ с использованием сведений, составляющих государственную тайну;
- Поставка специализированных компонентов (Xilinx, Altera, Analog Devices, Intersil, Interpoint, Microsemi, Aeroflex, Peregrine, Syfer, Eurofarad, Texas Instrument, Miteq, Cobham, E2V, MA-COM, Hittite, Mini-Circuits,General Dynamics и др.);

Помимо этого, одним из направлений компании «ЭлектроПласт» является направление «Источники питания». Мы предлагаем Вам помощь Конструкторского отдела:

- Подбор оптимального решения, техническое обоснование при выборе компонента;
- Подбор аналогов;
- Консультации по применению компонента;
- Поставка образцов и прототипов;
- Техническая поддержка проекта;
- Защита от снятия компонента с производства.

Как с нами связаться

Телефон: 8 (812) 309 58 32 (многоканальный)
Факс: 8 (812) 320-02-42
Электронная почта: org@eplast1.ru
Адрес: 198099, г. Санкт-Петербург, ул. Калинина, дом 2, корпус 4, литера А.