Signal Contacts

Type III+, Crimp, Snap-In

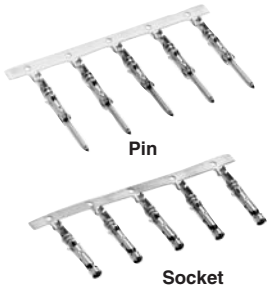

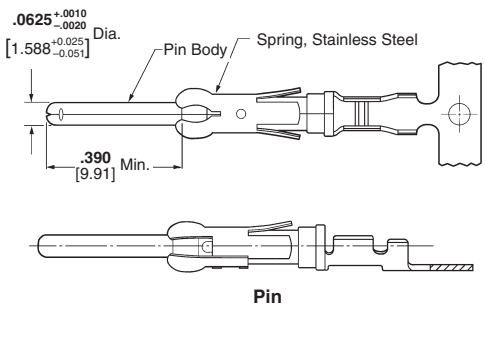

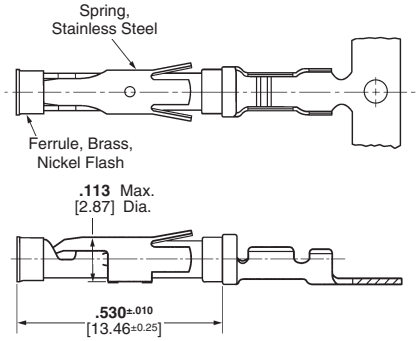

Material and Finish — See chart.
Contact Body—Brass or phosphor bronze
Retention Spring—Stainless steel

Application Tooling—Page 29
Technical Documents
114-10004 Application Specification
108-10042 Product Specification

Contact Size 16—Pin Diameter .062 [1.57] (Test Current, 13 Ampere)‡

‡Single contact, free-air test current is not to be construed as contact rating current. Use only for testing. Refer to contact current carrying capability information on page 8.

Wire Size Range AWG	Wire Size Range mm²	Ins. Dia. Range	Contact Finish	Strip Form Contact No. Pin	Strip Form Contact No. Socket	Loose Piece Contact No. Pin	Loose Piece Contact No. Socket	Tooling Part No.** Loose Piece Hand Tool	Tooling Part No.** Strip Form Applicators
30-28	0.05-0.09	**.015-.030** 0.38-0.76	Gold/Nickel[2]	788085-3	788088-2	—	—	90716-1	567867-1*** or 567947-1*** or 680602-□***
			Sel. Gold/Nickel[3]	788085-1	788088-1	788085-4	788088-3		
30-26	0.05-0.15	**.040-.060**[1] 1.02-1.52	Bright Tin	1-66425-2	1-66424-1	—	—	91515-1[6]	466598-□***
			Gold/Nickel[2]	66425-7	66424-7	66429-3	66428-3		
			Sel. Gold/Nickel[3]	66425-8	66424-8	66429-4	66428-4		
		.014-.030[1] 0.36-0.76	Gold/Nickel[2]	66393-7	66394-7	—	—	90225-2[6]	466585-3***
			Sel. Gold/Nickel[3]	66393-8	66394-8	66406-4	66405-4		
26-24	0.12-0.2	**.035-.055**[1] 0.89-1.40	Bright Tin	1-66106-5	1-66108-5	1-66107-1	1-66109-7	91515-1[6] or 58495-1*	466321-□*** or 466908-2***
			Gold/Nickel[2]	66106-7	66108-7	66107-3	66109-3		
			Sel. Gold/Nickel[3]	66106-8	66108-8	66107-4	66109-4		
			Sel. Gold/Nickel[4]	—	66108-1	—	66109-1		
24-20	0.2-0.6	**.040-.080**[1] 1.02-2.03	Bright Tin	2-66102-5	3-66104-0	1-66103-8	1-66105-9	91515-1[6] or 58495-1*	466323-□*** or 466907-2***
			Gold/Nickel[2]	66102-8	66104-8	66103-3	66105-3		
			Sel. Gold/Nickel[3]	66102-9	66104-9	66103-4	66105-4		
				2-66102-2[7]	2-66104-3[7]	—	—		
			Sel. Gold/Nickel[4]	—	66104-1	—	66105-1		
		.060-.120[5] 1.52-3.05	Bright Tin	1-66564-2	1-66563-1	66566-7	66565-7	91542-1[6]	466383-4*** or 466979-1*** or 567363-□***
			Sel. Gold/Nickel[3]	66564-8	66563-8	66566-4	66565-4		
		.080-.100[1] 2.03-2.54	Bright Tin	1-66332-4	1-66331-4	1-66400-0	1-66399-0	91523-1[6] or 90225-2[6]	466324-□*** or 466942-1***
			Gold/Nickel[2]	66332-7	66331-7	66400-3	66399-3		
			Sel. Gold/Nickel[3]	66332-8	66331-8	66400-4	66399-4		
			Sel. Gold/Nickel[4]	—	66331-2	—	66399-2		
18-16	0.8-1.4	**.080-.100**[1] 2.03-2.54	Bright Tin	1-66098-9[S]	1-66100-9	1-66099-5	1-66101-9	91505-1[6] or 91523-1[6] or 58495-1*	466325-□*** or 466906-1***
				1-66098-8					
			Gold/Nickel[2]	66098-8	66100-8	66099-3	66101-3		
			Sel. Gold/Nickel[3]	66098-9	66100-9	66099-4	66101-4		
			Sel. Gold/Nickel[4]	66098-6	—	66099-1	—		
18-14	0.8-2.0	**.080-.100**[1] 2.03-2.54	Bright Tin	1-66359-4	1-66358-6	1-66361-2	1-66360-2	91519-1[6]	466326-□*** or 466923-2***
			Phos Bronze	1-66359-5	1-66358-8	1-66359-5	1-66358-8		
			Gold/Nickel[2]	66359-9	66358-9	66361-3	66360-3		
			Sel. Gold/Nickel[3]	1-66359-0	1-66358-0	66361-4	66360-4		
				1-66359-2	1-66358-3	66361-8	66360-8		
			Sel. Gold/Nickel[4]	—	66358-1	—	66360-1		
		.110-.150[5] 2.79-3.81	Bright Tin	66597-8	66598-9	66602-8	66601-9	91521-1[6]	466958-1*** or 567364-□***
					1-66598-0				
			Sel. Gold/Nickel[3]	66597-2	66598-2	66602-2	66601-2		

[1]Overall insulation crimp diameter, including crimp barrel, must not exceed .125 [3.18].
[2].000015 [0.00038] gold in the mating area over .000050 [0.00127] min. nickel.
[3].000030 [0.00076] gold in the mating area, with gold flash on remainder, over .000050 [0.00127] min. nickel.
[4].000030 [0.00076] gold in the mating area, with gold gradient on remainder, over .000050 [0.00127] min. nickel.

Note: All part numbers are RoHS compliant.

[5]**Contacts can ONLY be used in: Metrimate; CPC Series 1 (Arr. 23-24), Series 4 (Arr. 23-13M, 23-16M, 23-22M), and VDE connectors.**
[6]To use with the 626 Pneumatic Tool: remove crimping head from Straight Action Hand Tool (SAHT), order SAHT Adapter **Part No. 217201-1**, Adapter Holder **Part No. 356304-1** (with ratchet) or **189928-1** (without), and Power Unit **Part No. 189721-1** (hand actuated) or **189722-1** (foot actuated).
[7]Phosphor Bronze

[S]Standard reeling of strip form contacts.
*Commercial PRO-CRIMPER II hand tool for field repair only. **Note:** Die Set can be adapted for use with 626 Pneumatic Tool System. **Insertion Tool Part No. 91002-1** (for insulation diameters .070 [1.78] or less), **No. 200893-2** (for insulation diameters .090 [2.29] max.). **Extraction Tool Part No. 305183.** (Instruction Sheet 408-1216)
**There are power options available for these tools/dies. See Battery Powered Crimp tool Kit and SDE Electric Terminator on page 30.
***Call Technical Support for Machine Applicator Part Numbers.

Dimensions are in inches and millimeters unless otherwise specified. Values in brackets are metric equivalents.

Dimensions are shown for reference purposes only. Specifications subject to change.

Technical Support
USA: 1-800-522-6752
Canada: 1-905-475-6222
Mexico: 01-800-733-8926
Central America: 52-55-5-729-0425
South America: 55-11-3611-1514
www.tycoelectronics.com

Signal Contacts (Continued)

Type III+, Crimp, Snap-In

Contact Size—16
Pin Diameter—.062 [1.57]

Material and Finish

Contact Body—Copper alloy, plated tin or gold
Spring—Stainless steel

Grounding Pin

(make first - break last)

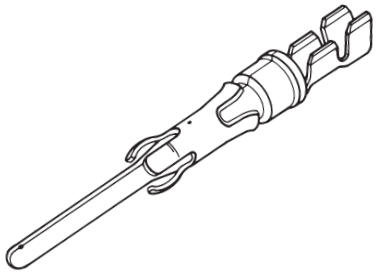

Related Product Data

Application Tooling—Pages 29, 30
Technical Documents—Page 4

Wire Size Range [mm²]	Wire Size Range AWG	Ins. Dia. Range[1]	Contact Finish	Grounding Pin Part No. Strip Form	Grounding Pin Part No. Loose Piece	Strip Form Applicator Part No.	Loose Piece Hand Tool** Part No.
0.12-0.2	26-24	**.035-.055** 0.89-1.4	Tin	164159-3	164162-1	—	91515-1[3] or 58495-1*
			Sel. Gold/Nickel[2]	164159-4	164162-2		
0.2-0.6	24-20	**.045-.070** 1.14-1.78	Tin	164160-3	164163-1	466323-□*** or 466907-2***	91515-1[3] or 91505-1[3] or 58495-1*
			Sel. Gold/Nickel[2]	164160-4	164163-2		
0.8-1.4	18-16	**.078-.098** 1.98-2.49	Tin	164161-3	164164-1	466741-□*** or 680114-3***	91523-1[3] or 91505-1[3] or 58495-1*
			Sel. Gold/Nickel[2]	164161-4	164164-2		

[1]Overall insulation crimp diameter, including crimp barrel, must not exceed .125 [3.18].
[2]Gold flash over .000030 [0.00076] min. nickel on entire contact, with .000030 [0.00076] gold in contact area.
[3]To use with the 626 Pneumatic Tool System: remove the crimping head from the Straight Action Hand Tool (SAHT) Assembly, order SAHT Adapter **Part No. (Call Technical Support at 800-522-6752)**, Adapter Holder **Part No. 356304-1** (with ratchet) or **189928-1** (without), and Power Unit **Part No. 189721-1** (hand actuated) or **189722-1** (foot actuated).
*Commercial PRO-CRIMPER II hand tool for field repair only. **Note:** Die Set can be adapted for use with the 626 Pneumatic Tool System.
**There are power options available for these tools/dies. See Battery Powered Crimp tool Kit and SDE Electric Terminator on page 30.
***Call Technical Support at 1-800-522-6752 for Automatic Machine Applicator Part Numbers.
Extraction Tool Part No. 725840-1

Note: All part numbers are RoHS compliant.

Type III+, Solder Versions

Pin

Socket

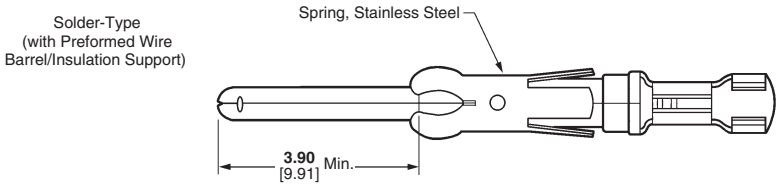

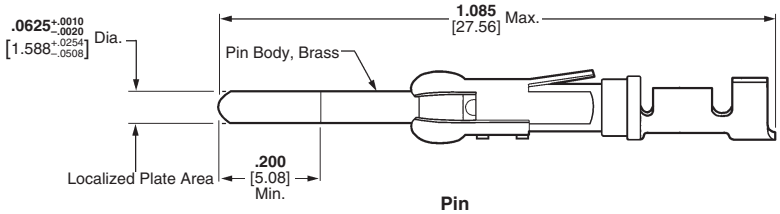

Pin

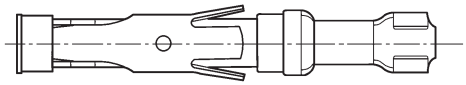

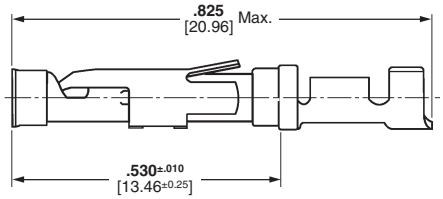

Socket

Material

Contact Body and Tab—Brass
Retention Spring—Stainless steel

Finish

See chart on Page 11.

Dimensions are in inches and millimeters unless otherwise specified. Values in brackets are metric equivalents.

Dimensions are shown for reference purposes only. Specifications subject to change.

Technical Support
USA: 1-800-522-6752
Canada: 1-905-475-6222
Mexico: 01-800-733-8926
Central America: 52-55-5-729-0425
South America: 55-11-3611-1514
www.tycoelectronics.com

Signal Contacts (Continued)

Type III+, Solder Versions
(Continued)

Pin

Socket

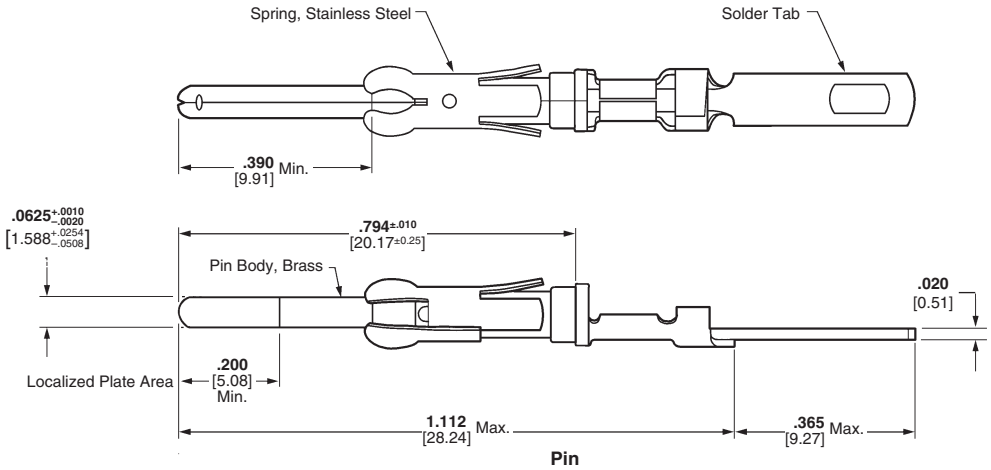

Pin

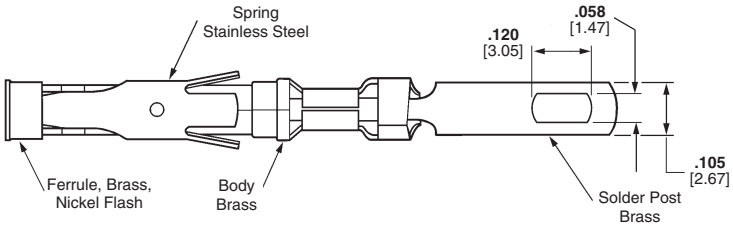

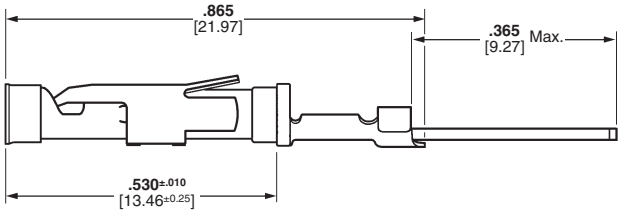

Socket

Material

Contact Body and Tab—Brass
Retention Spring—Stainless steel

Finish

See chart.

Contact Size 16—Pin Diameter .062 [1.57] (Test Current, 13 Ampere)‡

Wire Size Range		Contact Finish	Loose Piece Contact No.	
AWG	[mm²]		Pin	Socket
26-20	0.12-0.6	Gold/Nickel[1]	66182-1♦	66183-1♦
18-16	0.8-1.4	Gold/Nickel[1]	66180-1♦	66181-1♦
Solder Tab		Duplex[2]	202236-7♦	202237-7♦
		Bright Tin	202236-5♦	202237-5♦

[1].000030 [0.00076] gold in mating area over .000050 [0.00127] nickel.
[2]Duplex plated .000030 [0.00076] gold in mating area over .000050 [0.00127] nickel on contact body; bright tin-lead on solder tab.
[3]Bright tin on entire contact.

Note: These contacts can be used in Multimate contact cavities of all connector housings.

‡Single contact, free-air test current is not to be construed as contact rating current. Use only for testing. Refer to contact current carrying capability information on page 3.

Extraction Tool **Part No. 305183** (Instruction Sheet 408-1216)

Note: All part numbers are RoHS compliant except: ♦ Indicates non-RoHS compliant.

Dimensions are in inches and millimeters unless otherwise specified. Values in brackets are metric equivalents.

Dimensions are shown for reference purposes only. Specifications subject to change.

Technical Support
USA: 1-800-522-6752
Canada: 1-905-475-6222
Mexico: 01-800-733-8926
Central America: 52-55-5-729-0425
South America: 55-11-3611-1514
www.tycoelectronics.com

Signal Contacts (Continued)

Type III+, Posted
(Replacement Contacts, See Note Below)

Pin

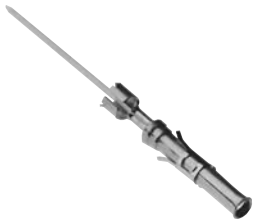

Socket

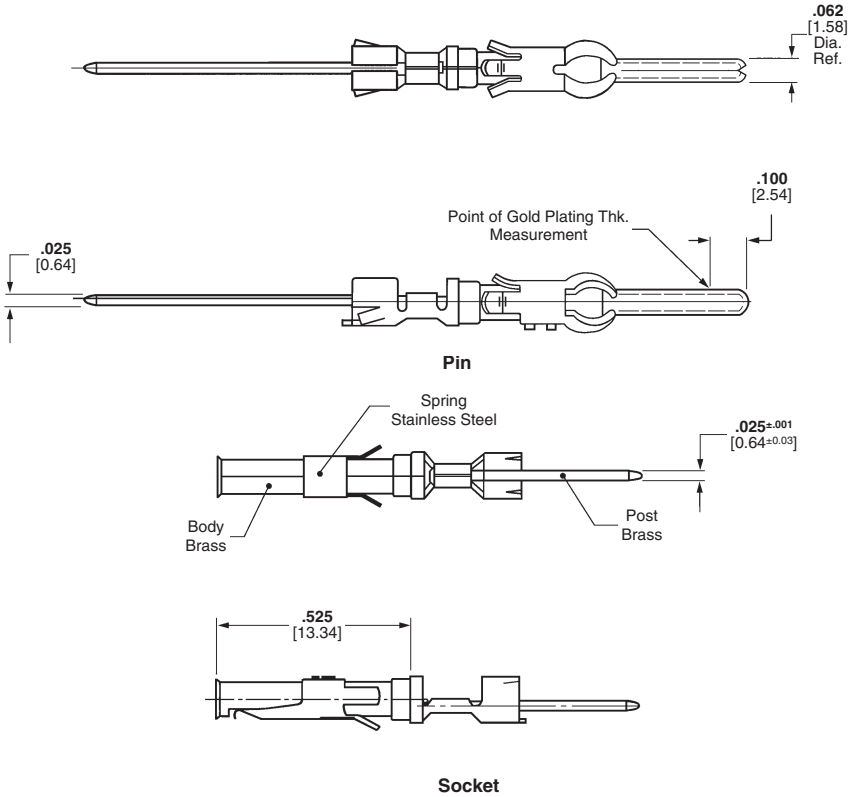

Material

Contact Body and Post—Brass

Retention Spring—Stainless steel

Finish

See chart.

Contact Size 16—Pin Diameter .062 [1.57] (Test Current, 13 Ampere)‡

Termination Method	Post Configuration	Contact Finish	Loose Piece Contact No.					
			3 Termination High Post		2 Termination High Post		1 Termination High Post	
			Pin	Socket	Pin	Socket	Pin	Socket
Wrap-Type	**.025 x .025** 0.64 x 0.64	Sel. Gold/Nickel[1]	6-66460-4	6-66461-3	6-66460-3	6-66461-2	6-66460-2	5-66461-5
		Bright Tin	6-66460-6	5-66461-9	6-66460-7	5-66461-8	6-66460-5	5-66461-4
	.045 x .045 1.14 x 1.14	Sel. Gold/Nickel[1]	1-66471-5	2-66473-0	—	—	1-66471-8	1-66473-9
		Bright Tin	1-66471-7	1-66473-8	—	—	1-66471-6	1-66473-7
	.031 x .062 0.79 x 1.57	Sel. Gold/Nickel[1]	1-66470-1	—	—	—	1-66470-0	—
TERMI-POINT Clip	**.031 x .062** 0.79 x 1.57	Sel. Gold/Nickel[1]	1-66468-3	1-66459-0	—	—	—	—

[1]Gold flash over .000050 [0.00127] nickel on entire contact, with .000030 [0.00076] gold to a distance of .200 [5.08] from mating end. Gold thickness controlled on socket O.D.

Posts plated tin-lead over copper.

Extraction Tool **Part No. 305183** (Instruction Sheet 408-1216)

Insertion Tool **Part No. 200893-2**

Note: These contacts are used as replacement contacts for all posted connectors.

‡Single contact, free-air test current is not to be construed as contact rating current. Use only for testing. Refer to contact current carrying capability information on page 3.

Note: All part numbers are RoHS compliant.

Dimensions are in inches and millimeters unless otherwise specified. Values in brackets are metric equivalents.

Dimensions are shown for reference purposes only. Specifications subject to change.

Technical Support
USA: 1-800-522-6752
Canada: 1-905-475-6222
Mexico: 01-800-733-8926
Central America: 52-55-5-729-0425
South America: 55-11-3611-1514
www.tycoelectronics.com

Signal Contacts (Continued)

Enhanced High Current Type III+, Crimp, Snap-In

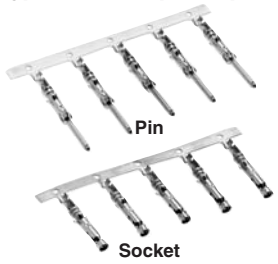

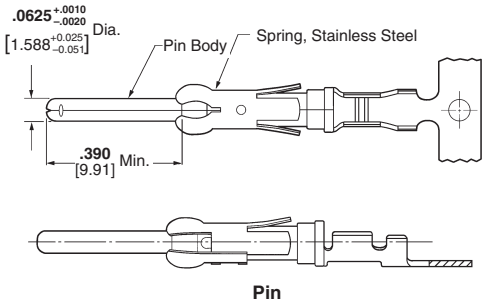

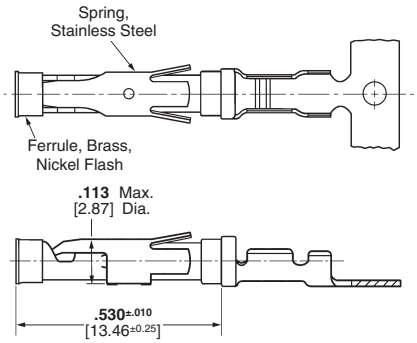

Material and Finish — See chart.

Contact Body—Copper Nickel Alloy

Retention Spring—Stainless steel

Related Product Data

Application Tooling — Pages 75-78

Technical Documents

114-10004 Application Specification

108-10024-2 Product Specification

Contact Size 16—Pin Diameter .062 [1.57]

Wire Size Range AWG	Wire Size Range mm²	Ins. Dia. Range	Contact Finish	Strip Form Contact No. Pin	Strip Form Contact No. Socket	Loose Piece Contact No. Pin	Loose Piece Contact No. Socket	Tooling Part No.** Loose Piece Hand Tool	Tooling Part No.** Strip Form Applicators
18-14	0.8-2.0	.080-.100[1] 2.03-2.54	Gold	1-66359-6	1-66358-9	1-66361-4	1-66360-4	91519-1[3]	466326-□*** or 466923-2***
			Tin	1-66359-9	2-66358-1	1-66361-6	1-66360-6		
		.110-.150[2] 2.79-3.81	Gold	1-66597-0	1-66598-1	66602-9	1-66601-0	91521-1[3]	466958-1*** or 567364-□***
			Tin	1-66597-1	1-66598-2	1-66602-0	1-66601-2		

1 Overall insulation crimp diameter, including crimp barrel, must not exceed .125 [3.18].
2 Contacts can ONLY be used in CPC, Series 1 (Arr. 23-24), Series 4 (Arr. 23-13M, 23-16M, 23-22M), and VDE connectors.
3 To use with the 626 Pneumatic Tool System: remove the crimping head from the Straight Action Hand Tool (SAHT) Assembly, order SAHT Adapter **Part No. 217201-1**, Adapter Holder **Part No. 356304-1** (with ratchet) or **189928-1** (without), and Power Unit **Part No. 189721-1** (hand actuated) or **189722-1** (foot actuated).
**There are power options available for these tools/dies. See Battery Powered Crimp tool Kit and SDE Electric Terminator on page 30.
*** Call Technical Support for Automatic Machine Applicator Part Numbers.

Note: All part numbers are RoHS compliant.

Ratings

Voltage: 250 Volts AC/DC
600 Volts AC/DC, Series I, VDE tested and select loaded only

Base Current: Type III+ contacts: 17 amperes, 30˚C temperature rise with single contact on 14 AWG wire
Enhanced High Current Type III+ contacts: **25 amperes**, 30˚C temperature rise with single contact on 14 AWG wire

Temperature: -55˚C to +105˚C

VDE 0627: XA/630/4KV/2 - Series I, VDE tested only

Multiplication Rating Factor (F)

Type III+ Contacts (Note: 1 = 17 amperes)

Shell Size	Single Circuit Wire Size 30 AWG	Single Circuit Wire Size 14 AWG	≅ 50% Wire Size 30 AWG	≅ 50% Wire Size 14 AWG	100% Wire Size 30 AWG	100% Wire Size 14 AWG
	Percent Connector Loading					
11-4	.291	1	.212	.905	.140	.684
13-9	.278	.995	.175	.750	.134	.567
17-16	.270	.990	.146	.625	.127	.472
23-24	.281	.985	.138	.550	.120	.416
23-37	.275	.985	.131	.497	.114	.376

Enhanced High Current Type III+ Contacts (14 AWG wire only - Note: 1 = 25 amperes)

Shell Size	Single Circuit 14 AWG	≅ 50% 14 AWG	100% 14 AWG
	Percent Connector Loading		
11-4	.880	.840	.640
13-9	.880	.640	.480
17-16	.880	.520	.400
23-24	.880	.520	.400
23-37	.880	.440	.320

Enhanced High Current Contacts & M Series Connectors: (Note: 1 = 24 amperes)

Single Circuit 14 AWG	≅ 50% 14 AWG	≅ 100% 14 AWG
1	.292	.250

Enhanced High Current Contacts & Metrimate Connectors: (Note: 1 = 24 amperes)

Single Circuit 14 AWG	≅ 50% 14 AWG	≅ 100% 14 AWG
1	.458	.375

Dimensions are in inches and millimeters unless otherwise specified. Values in brackets are metric equivalents.

Dimensions are shown for reference purposes only. Specifications subject to change.

Technical Support
USA: 1-800-522-6752
Canada: 1-905-475-6222
Mexico: 01-800-733-8926
Central America: 52-55-5-729-0425
South America: 55-11-3611-1514
www.tycoelectronics.com

Signal Contacts (Continued)

Type II, Screw Machined, Crimp

Material

Contact Body—Brass
Retention Spring—Stainless steel

Finish

Contact Body—.000030 [0.00076] gold over .000050 [0.00127] nickel. Gold thickness controlled on socket O.D.
Retention Spring—Stainless steel

Related Product Data

Application Tooling—Pages 75-78

Pin

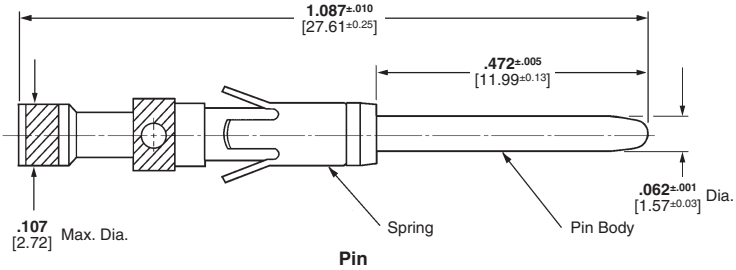

Pin

Socket

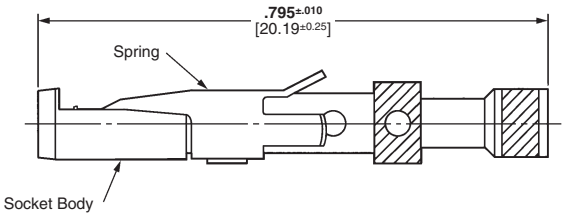

Socket

Contact Size 16—Pin Diameter .062 [1.57] (Test Current, 13 Ampere)‡

Wire Size Range AWG	Wire Size Range mm²	Ins. Dia. Range[1]	Tape Mounted Contact No.[2] Pin	Tape Mounted Contact No.[2] Socket	Loose Piece Contact No. Pin	Loose Piece Contact No. Socket	Contact Color Code	Tooling Part No.** Tape Mounted: Dies for AMP-TAPETRONIC Machine 69875	Tooling Part No.** Loose Piece: Die Set for 626 Pneumatic Tool System	Tooling Part No.** Loose Piece: Hand Tool
28-24	0.08-0.20	**.035-.055** 0.89-1.40	201611-4	—	201611-1[4]	201613-1[5]	Red/Red	90249-2	90230-1[7]	91538-1 or 601967-1
		.048-.065 1.22-1.65	—	—	201334-1[4]	201332-1[5]	Red/Red			
		.095-.110 2.41-2.79	—	—	202410-1[4]	202411-1[5]	Green		—	601967-1
24-20	0.2-0.6	**.040-.062** 1.02-1.57	201578-4	—	201578-1[4]	201580-1[5]	Yellow/Red	90249-2	90230-1[7]	91538-1 or 58541-1*
		.055-.088 1.40-2.16	201330-6	201328-9	201330-1[4]	201328-1[5]	Yellow/Red			or 601967-1
18 (Two)	0.9-0.9 (Two)	No. Ins. Support	—	—	202725-1[4]	202726-1[4]	Blue	—	90231-2[7]	91539-1 or 601967-1
18-16	0.8-1.4	**.080-.105** 2.03-2.67	—	—	202507-1[4]	202508-1[5]	—	—	—	90136-1 or 601967-1
		No Ins. Support	200336-6	200333-8	200336-1[4]	200333-1[4]	Blue/Blue	90250-1	90231-2[7]	91539-1 58541-1* or 601967-1
			—	—	204219-1[5,6]	—	Blue/Blue	—	—	
14	2	No Ins. Support	212618-2[3]	—	212618-1[3,6,†]	—	Violet/Blue	90250-1	90231-2[7]	91539-1 58541-1* or 601967-1
			201570-2	201568-3	201570-1[4]	201568-1[5]	Violet/Blue	—	—	

[1]Overall insulation crimp diameter, including crimp barrel, must not exceed .125 [3.18].
[2]For AMP-TAPETRONIC Machine No. 69875, order contacts by Tape Mounted Contact No., plus packaging code "IM REEL" (5000 parts per reel).
[3]Grounding pin is used to provide a make-first/break-last condition when mating and unmating connector halves.
[4]Use turret TH502 (**1-601967-6**) with hand tool **601967-1**.
[5]Use turret TH501 (**1-601967-5**) with hand tool **601967-1**.
[6]Pin length is .630±.005 [16.002±.127] on these two pins.
[7]Die Set requires "C" Head Adapter **Part No. 318161-1**; Adapter Holder **Part No. 356304-1** (with ratchet) or **189928-1** (without); and Power Unit **Part No. 189721-2** (hand actuated) or **189722-2** (foot actuated).
*Commercial PRO-CRIMPER II Hand Tool for field repair use only. **Note:** Die Set can be adapted for use with the 626 Pneumatic Tool System.
**There are power options available for these tools/dies. See Battery Powered Crimp tool Kit and SDE Electric Terminator on page 30.
†Does not use Hand Tool 91539-1 or 601967-1.
‡Single contact, free-air test current is not to be construed as contact rating current. Use only for testing. Refer to contact current carrying capability information on page 8.
Insertion Tool Part No. 200893-2 (for insulation diameters .070 [1.78] or less).
Extraction Tool Part No. 305183.
Note: All part numbers are RoHS compliant.

Dimensions are in inches and millimeters unless otherwise specified. Values in brackets are metric equivalents.

Dimensions are shown for reference purposes only. Specifications subject to change.

Technical Support
USA: 1-800-522-6752
Canada: 1-905-475-6222
Mexico: 01-800-733-8926
Central America: 52-55-5-729-0425
South America: 55-11-3611-1514
www.tycoelectronics.com

Signal Contacts (Continued)

Size 20 DF, Crimp, Snap-In

Contact Size—20
Pin Diameter—.040 [1.02]
***See Product Spec 108-40005**

Pin

Socket

With Insulation Support

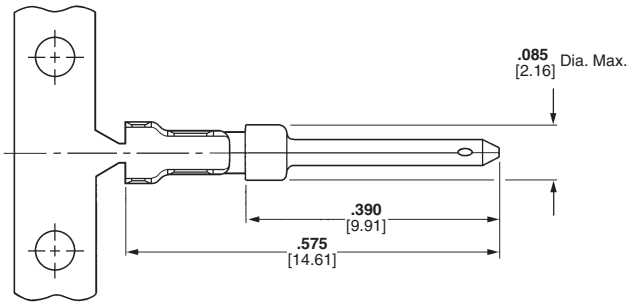

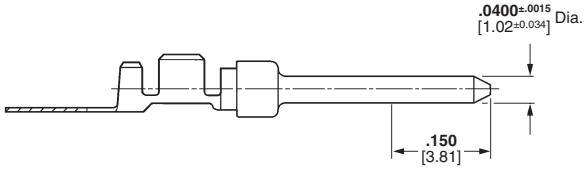

Pin

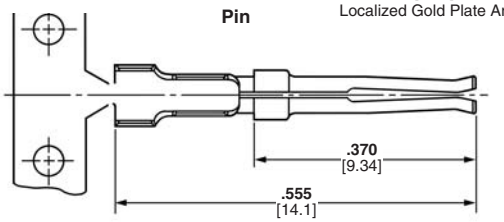

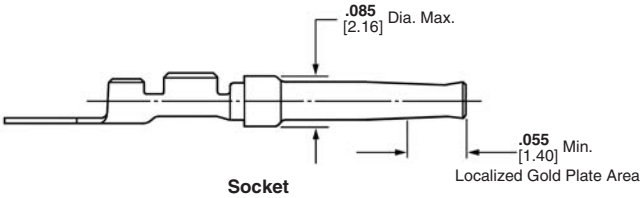

Socket

Material

Pin Body—Brass
Socket—Phosphor bronze

Contact Finish

A—Select gold flash over nickel on entire contact, with additional .000030 [0.00076] gold on mating end

B—Duplex plated .000030 [0.00076] gold on mating end, tin on termination end, with entire contact nickel underplated

C—Gold flash over nickel on entire contact

D—Duplex plated gold flash on mating end, tin on termination end, with entire contact nickel underplated

Insertion/Extraction Tool **Part No. 91285-1**

Instruction Sheet—408-9404

This tool includes interchangeable tips to Insert/Extract:

Size 22, 28-22 AWG [0.08-0.03mm²] Crimp Contacts

Size 20, 28-20 AWG [0.08-0.6mm²] Crimp and Solder Cup Contacts

Size 20, Posted Contacts

Wire Size Range	Ins. Dia. Max.	Contact Finish Code	Contact Part Nos. Pin Strip Form	Pin Loose Piece	Socket Strip Form	Socket Loose Piece	Tooling** Strip Form Applicator††	Tooling** Hand Tool	Color Code (Loose Piece)
28-24 AWG [0.08-0.2 mm²]	.040 1.02	A	66507-3♦	66507-9♦	66505-3♦	66505-9♦	466423-□†† ♦ or 466901-1††♦ or 1016015-1††♦	91503-1†♦	Blue Dot
		B	1658540-1♦	1658540-5♦	1658538-2♦	—			
		C	66507-4♦	1-66507-0♦	66505-4♦	1-66505-0♦			
		D	1658540-5♦	1658540-2♦	1658538-3♦	1658538-1♦			
	.060 1.52	A	66682-2♦	66682-4♦	66683-2♦	66683-4♦	466758-2††♦ or 466963-1††♦ or 567804-1††♦	91549-1†♦	Black Dot
		B	5066682-9♦	—	1-5066683-0♦	—			
		D	5066682-6♦	—	5066683-7♦	—			
26-22 AWG [0.12-0.4 mm²]	.050 1.27	A	745254-2♦	745254-6♦	745253-2♦	745253-6♦	466968-1††♦ or 567036-□††♦ or 567849-1††♦	91525-1†♦	Yellow Dot
		B	1658544-2♦	1658544-1♦	1658543-2♦	1658543-1♦			
		C	745254-3♦	745254-7♦	745253-3♦	745253-7♦			
		D	1658544-3♦	—	1658543-3♦	—			
24-20 AWG [0.2-0.6 mm²]	.060 1.52	A	66506-3♦	66506-9♦	66504-3♦	66504-9♦	466422-□††♦ or 466900-1††♦ or 567801-1††♦ or 1016002-1††♦	91503-1†♦	Red Dot
		B	1658539-1♦	1658539-3♦	1658537-3♦	1658537-4♦			
		C	66506-4♦	1-66506-0♦	66504-4♦	1-66504-0♦			
		D	1658539-2♦	1658539-4♦	1658537-1♦	1658537-2♦			

†To use with the 626 Pneumatic Tool System: remove the crimping head from the Straight Action Hand Tool (SAHT) Assembly, order SAHT Adapter **Part No. (Call Technical Support at 800-522-6752)**, Adapter Holder **Part No. 356304-1** (with ratchet) or **189928-1** (without), and Power Unit **Part No. 189721-1** (hand actuated) or **189722-1** (foot actuated).

††For complete information on AMP Strip Form Applicators for fully automatic and semiautomatic machines, contact Technical Support: 1-800-522-6752.

Note: Commercial PRO-CRIMPER II Maintenance and Repair Hand Tool for Wire Size 28-24 AWG [0.08-0.2mm²] (Ins. Dia. Max. .040 [1.02]), and Wire Size 24-20 AWG [0.2-0.6mm²] (Ins. Dia. Max. .060 [1.52])—**Part No. 58448-2.**

Note: Die Set **Part No. 58448-3** can be adapted for use with the 626 Pneumatic Tool System.

**There are power options available for these tools/dies. See Battery Powered Crimp tool Kit and SDE Electric Terminator on page 30.

Note: All part numbers are RoHS compliant except: ♦ Indicates non-RoHS compliant.

Dimensions are in inches and millimeters unless otherwise specified. Values in brackets are metric equivalents.

Dimensions are shown for reference purposes only. Specifications subject to change.

Technical Support
USA: 1-800-522-6752
Canada: 1-905-475-6222
Mexico: 01-800-733-8926

Central America: 52-55-5-729-0425
South America: 55-11-3611-1514
www.tycoelectronics.com

Signal Contacts (Continued)

Size 20 DF, Crimp, Snap-In
(Continued)

Pin

Socket

Without Insulation Support

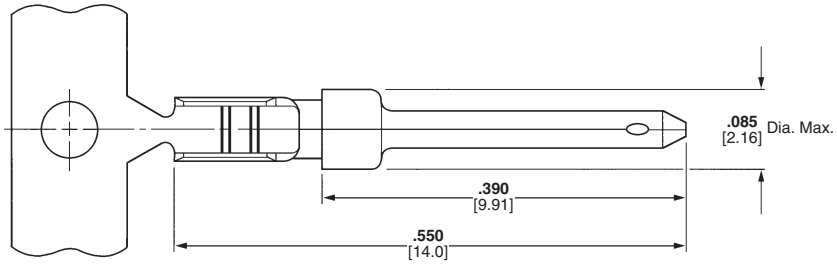

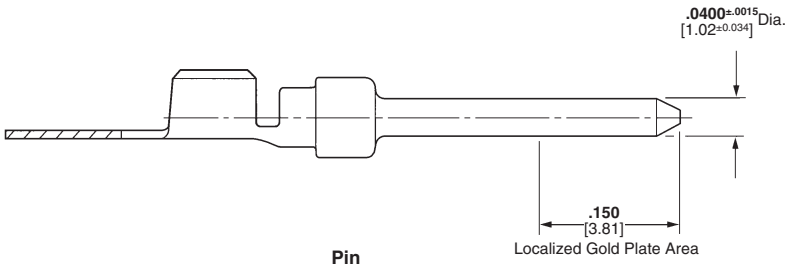

Pin

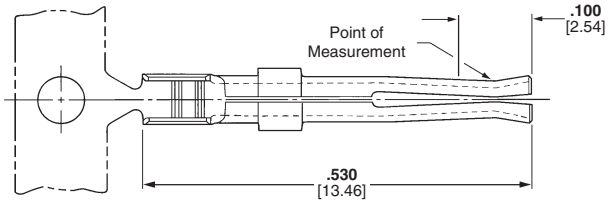

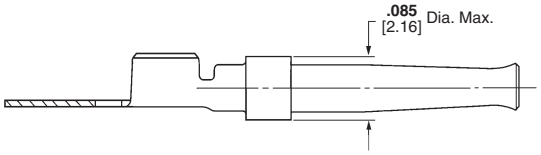

Socket

Wire Size Range	Ins. Dia. Max.	Contact Finish Code	Contact Part Nos. Pin Strip Form	Contact Part Nos. Pin Loose Piece	Contact Part Nos. Socket Strip Form	Contact Part Nos. Socket Loose Piece	Tooling** Strip Form Applicator	Tooling** Hand Tool	Color Code (Loose Piece)
28-24 AWG [0.08-0.2 mm²]	.068 1.73	A	205310-2♦	—	205311-3♦	—	††	—	—
		C	—	—	—	—			
24-20 AWG [0.2-0.6 mm²]	.068 1.73	A	205202-2♦	—	205201-3♦	205201-5♦	††	91548-1♦	Red Dot
		C	205202-6♦	205202-7♦	205201-6♦	205201-7♦			
22-18 AWG [0.4-0.8 mm²]	.068 1.73	A	745229-2♦	745229-4♦	745230-2♦	745230-4♦	††	91513-1♦	Green Dot
		B	1-745229-1♦	—	1-745230-1♦	1-745230-3♦			
		C	745229-5♦	745229-7♦	745230-5♦	745230-7♦			
		D	—	—	745230-8♦	—			

††For complete information on AMP Strip Form Applicators for fully automatic and semiautomatic machines, contact Technical Support: 1-800-522-6752.

Note: Wire insulation diameter is limited by the connector housing cavity and clearance for the insertion/extraction tool.

**There are power options available for these tools/dies. See Battery Powered Crimp tool Kit and SDE Electric Terminator on page 30.

Note: All part numbers are RoHS compliant except: ♦ Indicates non-RoHS compliant.

Dimensions are in inches and millimeters unless otherwise specified. Values in brackets are metric equivalents.

Dimensions are shown for reference purposes only. Specifications subject to change.

Technical Support
USA: 1-800-522-6752
Canada: 1-905-475-6222
Mexico: 01-800-733-8926
Central America: 52-55-5-729-0425
South America: 55-11-3611-1514
www.tycoelectronics.com

Signal Contacts (Continued)

Size 20 DF, Solder, Snap-In

Contact Size—20
***See Product Spec 108-40005**

Pin

Socket

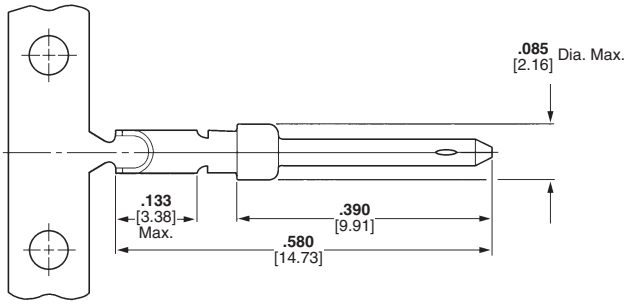

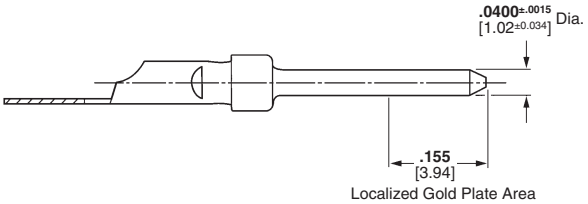

Pin

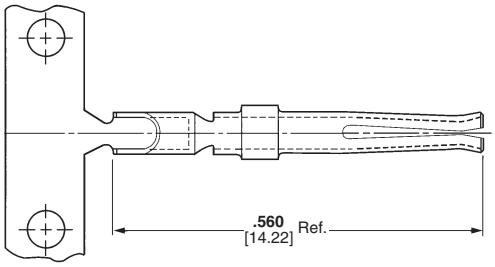

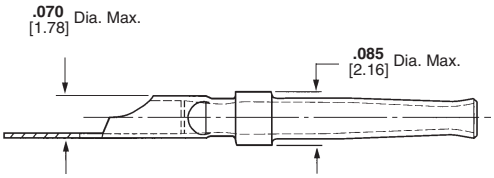

Socket

Material

Pin—Brass
Socket—Phosphor bronze

Contact Finish

Gold flash over nickel on entire contact, with additional .000030 [0.00076] gold on mating end

Contacts to be soldered to wire before being inserted into housing.
18 AWG [0.8-0.9 mm²] Max. Wire

Strip Form Contact No.		Loose Piece Contact No.	
Pin	Socket	Pin	Socket
66570-2	66569-2	66570-3	66569-3

Note: All part numbers are RoHS compliant.

Dimensions are in inches and millimeters unless otherwise specified. Values in brackets are metric equivalents.

Dimensions are shown for reference purposes only. Specifications subject to change.

Technical Support
USA: 1-800-522-6752
Canada: 1-905-475-6222
Mexico: 01-800-733-8926
Central America: 52-55-5-729-0425
South America: 55-11-3611-1514
www.tycoelectronics.com

Компания «ЭлектроПласт» предлагает заключение долгосрочных отношений при поставках импортных электронных компонентов на взаимовыгодных условиях!

Наши преимущества:

- Оперативные поставки широкого спектра электронных компонентов отечественного и импортного производства напрямую от производителей и с крупнейших мировых складов;
- Поставка более 17-ти миллионов наименований электронных компонентов;
- Поставка сложных, дефицитных, либо снятых с производства позиций;
- Оперативные сроки поставки под заказ (от 5 рабочих дней);
- Экспресс доставка в любую точку России;
- Техническая поддержка проекта, помощь в подборе аналогов, поставка прототипов;
- Система менеджмента качества сертифицирована по Международному стандарту ISO 9001;
- Лицензия ФСБ на осуществление работ с использованием сведений, составляющих государственную тайну;
- Поставка специализированных компонентов (Xilinx, Altera, Analog Devices, Intersil, Interpoint, Microsemi, Aeroflex, Peregrine, Syfer, Eurofarad, Texas Instrument, Miteq, Cobham, E2V, MA-COM, Hittite, Mini-Circuits,General Dynamics и др.);

Помимо этого, одним из направлений компании «ЭлектроПласт» является направление «Источники питания». Мы предлагаем Вам помощь Конструкторского отдела:

- Подбор оптимального решения, техническое обоснование при выборе компонента;
- Подбор аналогов;
- Консультации по применению компонента;
- Поставка образцов и прототипов;
- Техническая поддержка проекта;
- Защита от снятия компонента с производства.

Как с нами связаться

Телефон: 8 (812) 309 58 32 (многоканальный)
Факс: 8 (812) 320-02-42
Электронная почта: org@eplast1.ru
Адрес: 198099, г. Санкт-Петербург, ул. Калинина, дом 2, корпус 4, литера А.