RFMD + TriQuint = Qorvo

RFXF0008

1:2.78 SMT Transformer
45MHz to 1218MHz

The RFXF0008 transformer is designed for applications that require small, low cost and highly reliable surface mount components. Applications may be found in broadband, wireless and other communications systems. These units are built lead-free and RoHS compliant. S-Parameters are available on request.

Package: SP6

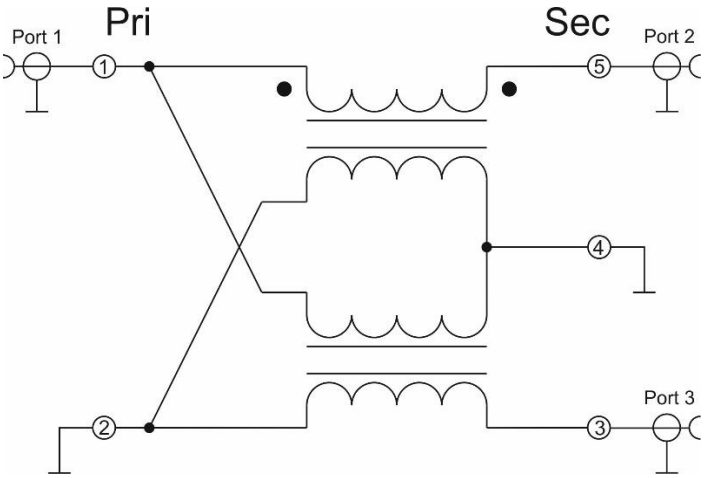

Functional Block Diagram

Features

- 45MHz to 1218MHz Operation
- Low Cost and RoHS Compliant
- Industry Standard SMT Package
- Available in Tape-and-Reel
- 75 Ω Characteristic Impedance

Applications

- Broadband/CATV
- Wireless

Ordering Information

RFXF0008SB	Sample bag with 5 pieces
RFXF0008SQ	Sample bag with 25 pieces
RFXF0008SR	13" Sample reel with 100 pieces
RFXF0008TR13	13" Reel with 1000 pieces

© 2015 RF Micro Devices, Inc.

RFMD + TriQuint = Qorvo

Absolute Maximum Ratings

Parameter	Rating	Unit
RF Power	2	W
Operating Temperature Range	-40 to +100	°C
Storage Temperature Range	-55 to +100	°C

RoHS (Restriction of Hazardous Substances): Compliant per EU Directive 2011/65/EU

Exceeding any one or a combination of the Absolute Maximum Rating conditions may cause permanent damage to the device. Extended application of Absolute Maximum Rating conditions to the device may reduce device reliability. Specified typical performance or functional operation of the device under Absolute Maximum Rating conditions is not implied.

Nominal Operating Parameters

Parameter	Specification			Unit	Condition
	Min	Typ	Max		
General Performance. Typical values represent Mid Band performance at T=25°C					
Operating Frequency Range	45		1218	MHz	
Insertion Loss		1.6	2.0	dB	45 MHz to 200 MHz
		1.5	2.0	dB	200 MHz to 600 MHz
		1.9	2.5	dB	600 MHz to 1000 MHz
		2.2	2.8	dB	1000 MHz to 1218 MHz
Input Return Loss	12	14		dB	45 MHz
	12	14		dB	45 MHz to 100 MHz
	15	17		dB	100 MHz to 400 MHz
	14	16		dB	400 MHz to 700 MHz
	12	16		dB	700 MHz to 1000 MHz
	11	14		dB	1000 MHz to 1218 MHz
Amplitude Balance		0.3	0.5	dB	45 MHz to 200 MHz
		0.4	1.0	dB	200 MHz to 600 MHz
		0.4	1.0	dB	600 MHz to 1000 MHz
		0.4	1.0	dB	1000 MHz to 1218 MHz
Phase Balance		2	3	°	45 MHz, Nominal Phase Difference is 180°
		5	10	°	45 MHz to 300 MHz, Nominal Phase Difference is 180°
		13	18	°	300 MHz to 600 MHz, Nominal Phase Difference is 180°
		20	26	°	600 MHz to 1000 MHz, Nominal Phase Difference is 180°
		21	26	°	1000 MHz to 1218 MHz, Nominal Phase Difference is 180°
DC Current Capability (in CT)			500	mA	
Impedance Ratio	1:2.78				
Type – Transmission Line	Balanced to Balanced				

© 2015 RF Micro Devices, Inc.

Typical Performance: T=25°C unless otherwise noted

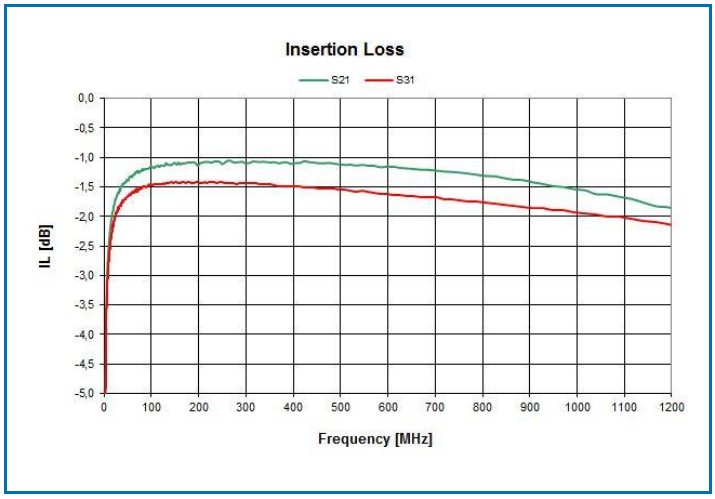

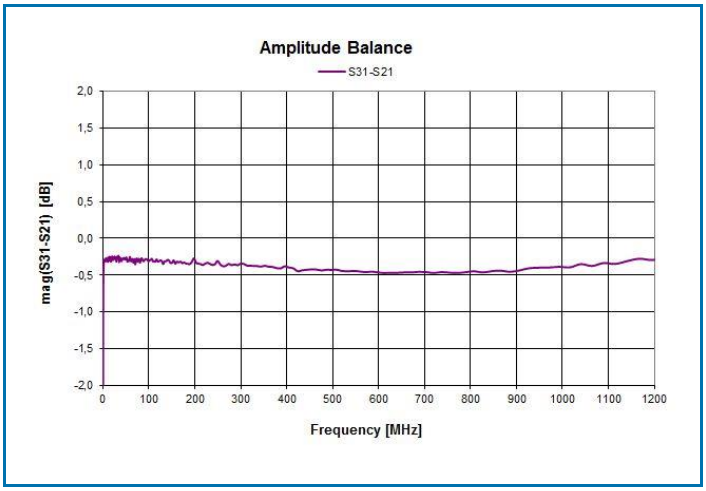

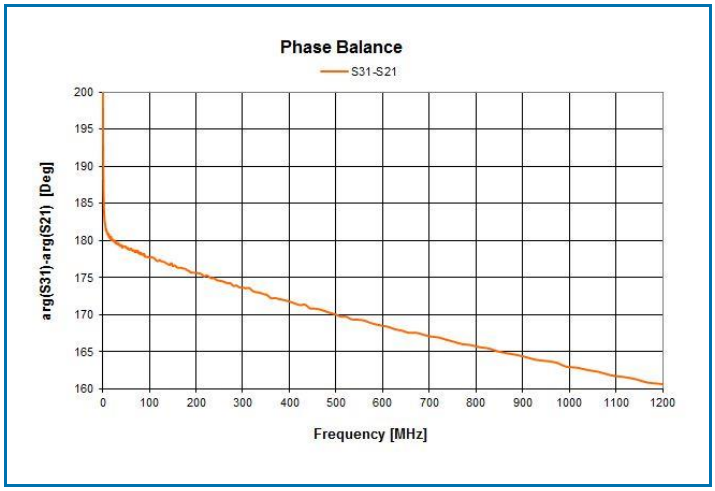

© *2015 RF Micro Devices, Inc.*

Package Outline, Pin Out and Branding Drawing (Dimensions in inches [millimeters])

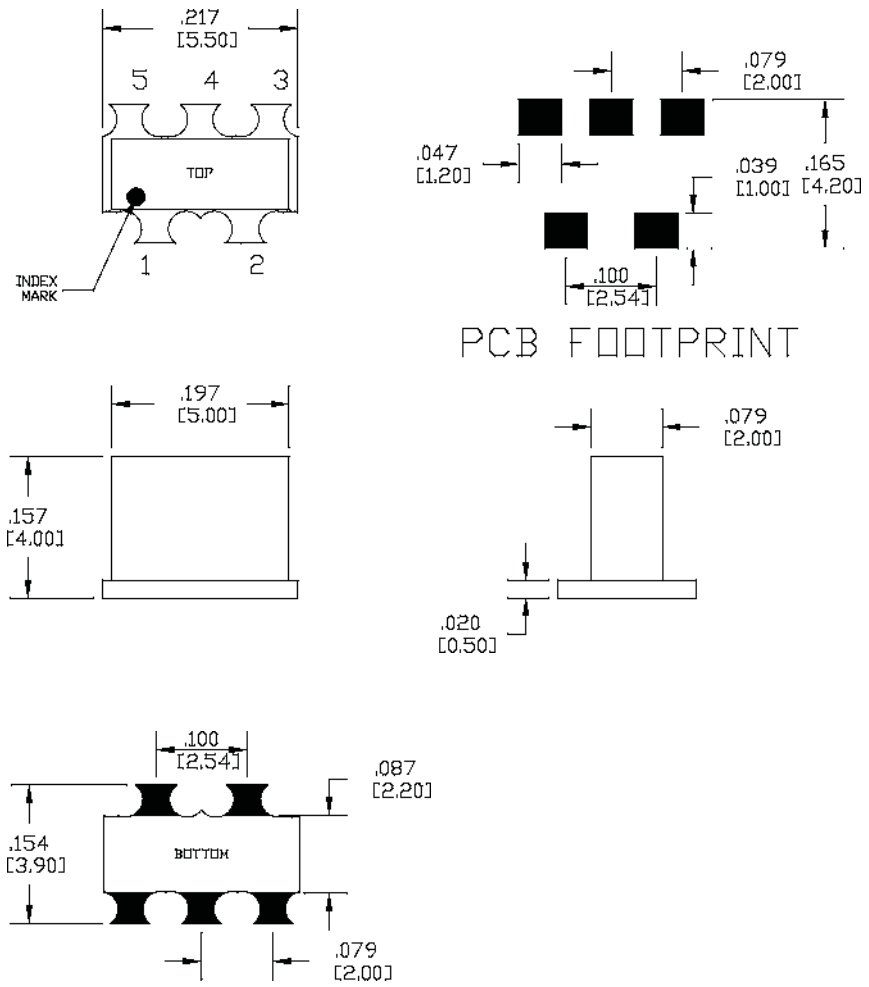

© *2015 RF Micro Devices, Inc.*

RFMD + TriQuint = Qorvo

Contact Information

For the latest specifications, additional product information, worldwide sales and distribution locations:

Web: **www.rfmd.com** **Tel: 1-844-890-8163**
Email: **customer.support@qorvo.com**

For information about the merger of RFMD and TriQuint as Qorvo:

Web: **www.qorvo.com**

Important Notice

The information contained herein is believed to be reliable. RFMD makes no warranties regarding the information contained herein. RFMD assumes no responsibility or liability whatsoever for any of the information contained herein. RFMD assumes no responsibility or liability whatsoever for the use of the information contained herein. The information contained herein is provided "AS IS, WHERE IS" and with all faults, and the entire risk associated with such information is entirely with the user. All information contained herein is subject to change without notice. Customers should obtain and verify the latest relevant information before placing orders for RFMD products. The information contained herein or any use of such information does not grant, explicitly or implicitly, to any party any patent rights, licenses, or any other intellectual property rights, whether with regard to such information itself or anything described by such information.

RFMD products are not warranted or authorized for use as critical components in medical, life-saving, or life-sustaining applications, or other applications where a failure would reasonably be expected to cause severe personal injury or death.

© 2015 RF Micro Devices, Inc.

Компания «ЭлектроПласт» предлагает заключение долгосрочных отношений при поставках импортных электронных компонентов на взаимовыгодных условиях!

Наши преимущества:

- Оперативные поставки широкого спектра электронных компонентов отечественного и импортного производства напрямую от производителей и с крупнейших мировых складов;
- Поставка более 17-ти миллионов наименований электронных компонентов;
- Поставка сложных, дефицитных, либо снятых с производства позиций;
- Оперативные сроки поставки под заказ (от 5 рабочих дней);
- Экспресс доставка в любую точку России;
- Техническая поддержка проекта, помощь в подборе аналогов, поставка прототипов;
- Система менеджмента качества сертифицирована по Международному стандарту ISO 9001;
- Лицензия ФСБ на осуществление работ с использованием сведений, составляющих государственную тайну;
- Поставка специализированных компонентов (Xilinx, Altera, Analog Devices, Intersil, Interpoint, Microsemi, Aeroflex, Peregrine, Syfer, Eurofarad, Texas Instrument, Miteq, Cobham, E2V, MA-COM, Hittite, Mini-Circuits,General Dynamics и др.);

Помимо этого, одним из направлений компании «ЭлектроПласт» является направление «Источники питания». Мы предлагаем Вам помощь Конструкторского отдела:

- Подбор оптимального решения, техническое обоснование при выборе компонента;
- Подбор аналогов;
- Консультации по применению компонента;
- Поставка образцов и прототипов;
- Техническая поддержка проекта;
- Защита от снятия компонента с производства.

Как с нами связаться

Телефон: 8 (812) 309 58 32 (многоканальный)
Факс: 8 (812) 320-02-42
Электронная почта: org@eplast1.ru
Адрес: 198099, г. Санкт-Петербург, ул. Калинина, дом 2, корпус 4, литера А.