COSEL AC-DC Power Supplies Enclosed type

PBA10F

Ordering information

PB	A	10	F	-□	-□
①	②	③	④	⑤	⑥

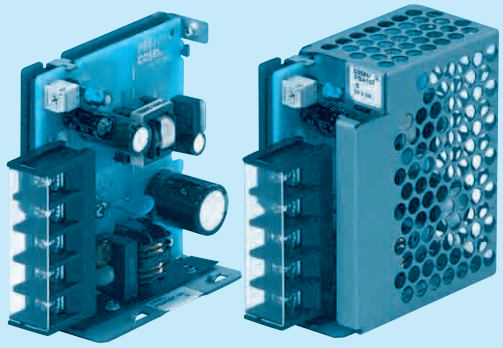

Cover is optional

Recommended EMI/EMC Filter
NAC-06-472

High voltage pulse noise type : NAP series
Low leakage current type : NAM series
＊The EMI/EMC Filter is recommended to connect with several devices.

①Series name
②Single output
③Output wattage
④Universal input
⑤Output voltage
⑥Optional ＊5
C :with Coating
G :Low leakage current
E :Low leakage current and EMI class A
T :Vertical terminal block
J :Connector type
N :with Cover (UL508 is acquired)
N1 :with DIN rail and Cover
V :Output voltage setting potentiometer externally

MODEL	PBA10F-5	PBA10F-12	PBA10F-24
MAX OUTPUT WATTAGE[W]	10	10.8	12
DC OUTPUT	5V 2A	12V 0.9A	24V 0.5A

SPECIFICATIONS

	MODEL		PBA10F-5	PBA10F-12	PBA10F-24
INPUT	VOLTAGE[V]		AC85 - 264 1φ or DC110 - 370 (AC50 or DC70 Please refer to the instruction manual 2.1 Input voltage ＊3)		
	CURRENT[A]	ACIN 100V	0.30typ (Io=100%)		
		ACIN 200V	0.20typ (Io=100%)		
	FREQUENCY[Hz]		50/60 (47 - 440) or DC		
	EFFICIENCY[%]	ACIN 100V	74typ	76typ	77typ
		ACIN 200V	74typ	76typ	77typ
	INRUSH CURRENT[A]	ACIN 100V	15typ (Io=100%)		
		ACIN 200V	30typ (Io=100%)		
	LEAKAGE CURRENT[mA]		0.15/0.30max (ACIN 100V/240V 60Hz, Io=100%, According to IEC60950-1,DENAN)		
OUTPUT	VOLTAGE[V]		5	12	24
	CURRENT[A]		2	0.9	0.5
	LINE REGULATION[mV] ＊6		20max	48max	96max
	LOAD REGULATION[mV] ＊6		40max	100max	150max
	RIPPLE[mVp-p]	0 to +50℃ ＊1	80max	120max	120max
		-10 - 0℃ ＊1	140max	160max	160max
	RIPPLE NOISE[mVp-p]	0 to +50℃ ＊1	120max	150max	150max
		-10 - 0℃ ＊1	160max	180max	180max
	TEMPERATURE REGULATION[mV]	0 to +50℃	50max	120max	240max
		-10 to +50℃	60max	150max	290max
	DRIFT[mV] ＊2		20max	48max	96max
	START-UP TIME[ms]		200typ(ACIN 100V, Io=100%) ＊Start-up time is 700ms typ for less than 1minute of applying input again from turning off the input voltage.		
	HOLD-UP TIME[ms]		20typ (ACIN 100V, Io=100%)		
	OUTPUT VOLTAGE ADJUSTMENT RANGE[V]		4.50 - 5.50	10.0 - 13.2	19.2 - 27.0
	OUTPUT VOLTAGE SETTING[V]		5.00 - 5.15	12.00 - 12.48	24.00 - 24.96
PROTECTION CIRCUIT AND OTHERS	OVERCURRENT PROTECTION		Works over 105% of rated current and recovers automatically		
	OVERVOLTAGE PROTECTION[V]		5.75 - 7.00	15.0 - 18.0	30.0 - 37.0
	OPERATING INDICATION		LED (Green)		
	REMOTE ON/OFF		None		
ISOLATION	INPUT-OUTPUT		AC3,000V 1minute, Cutoff current = 10mA, DC500V 50MΩmin (At Room Temperature)		
	INPUT-FG		AC2,000V 1minute, Cutoff current = 10mA, DC500V 50MΩmin (At Room Temperature)		
	OUTPUT-FG		AC500V 1minute, Cutoff current = 25mA, DC500V 50MΩmin (At Room Temperature)		
ENVIRONMENT	OPERATING TEMP.,HUMID.AND ALTITUDE		-10 to +71℃ (Required Derating), 20 - 90%RH (Non condensing) 3,000m (10,000feet) max		
	STORAGE TEMP.,HUMID.AND ALTITUDE		-20 to +75℃, 20 - 90%RH (Non condensing) 9,000m (30,000feet) max		
	VIBRATION		10 - 55Hz, 19.6m/s² (2G), 3minutes period, 60minutes each along X, Y and Z axis		
	IMPACT		196.1m/s² (20G), 11ms, once each X, Y and Z axis		
SAFETY AND NOISE REGULATIONS	AGENCY APPROVALS (At only AC input)		UL60950-1, C-UL(CSA60950-1), EN60950-1, EN50178 Complies with DEN-AN		
	CONDUCTED NOISE		Complies with FCC Part15 classB, VCCI-B, CISPR22-B, EN55011-B, EN55022-B		
	HARMONIC ATTENUATOR		Complies with IEC61000-3-2 (Not built-in to active filter ＊4) ＊7		
OTHERS	CASE SIZE/WEIGHT		31×78×68mm [1.22×3.07×2.68 inches] (without terminal block) (W×H×D) / 150g max (with cover : 180g max)		
	COOLING METHOD		Convection		

＊1 Measured by 20MHz oscilloscope or Ripple-Noise meter(equivalent to KEISOKU-GIKEN :RM101).
＊2 Drift is the change in DC output for an eight hour period after a half-hour warm-up at 25℃.
＊3 Derating is required.
＊4 When two or more units are used,they may not comply with the harmonic attenuator. Please contact us for details.
＊5 Please contact us about safety approvals for the model with option.
＊6 Please contact us about dynamic load and input response.
＊7 Please contact us about class C.
＊ Parallel operation with other model is not possible.
＊ Derating is required when operated with cover.
＊ A sound may occur from power supply at peak loading.

Block diagram

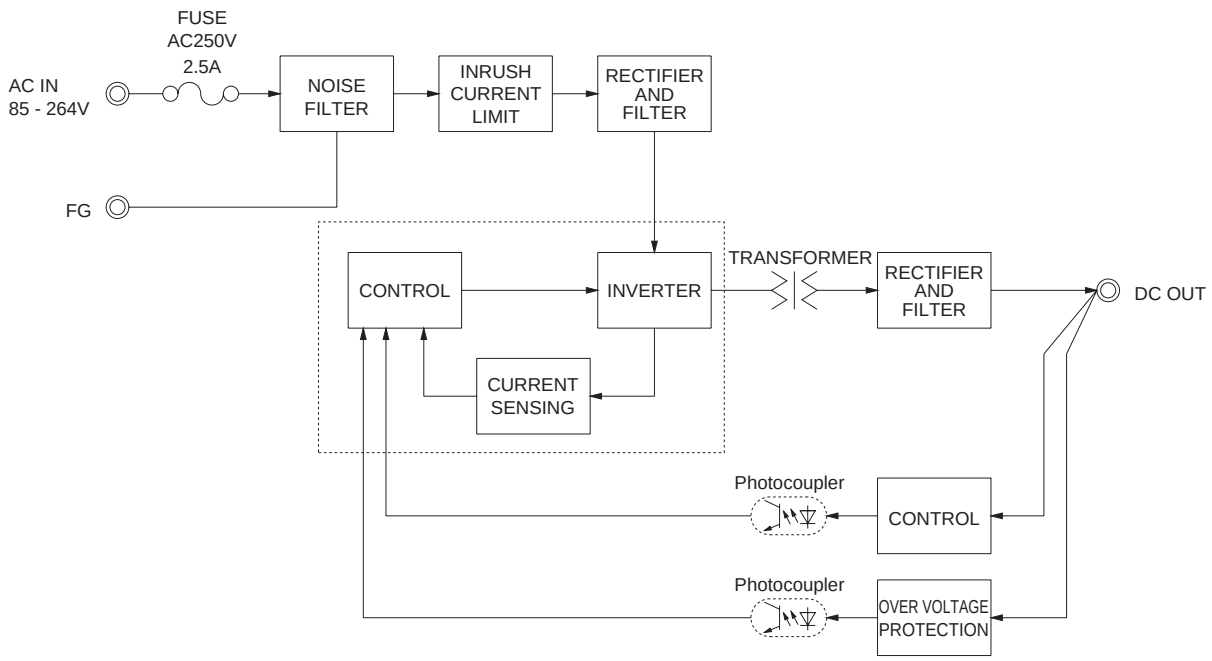

External view

※ External size of option T,J,N,N1 and V is different from standard model and refer to 7 Option of instruction manual for details.

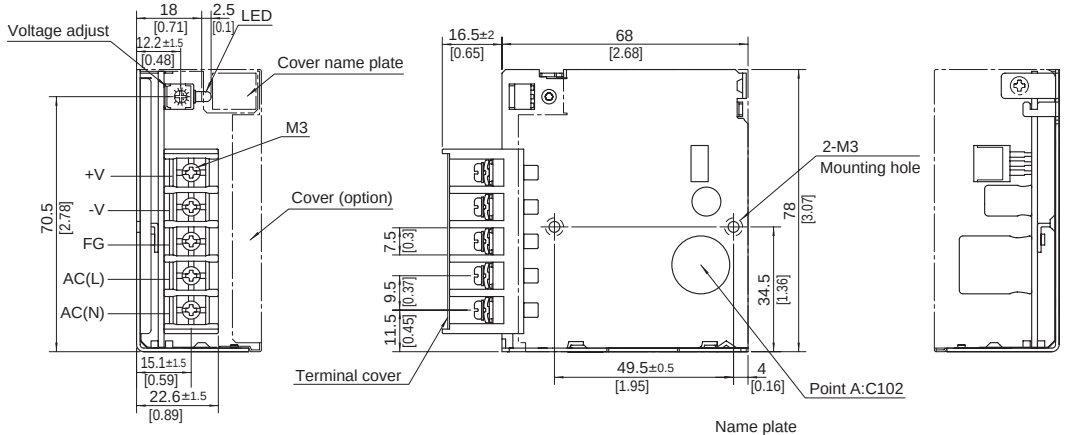

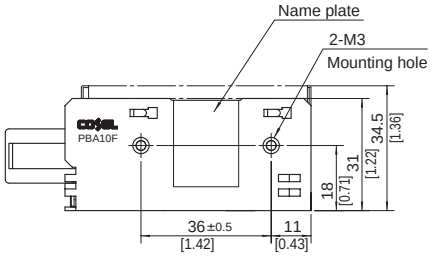

※ Tolerance : ±1 [±0.04]
※ Weight : 150g max (with cover : 180g max)
※ PCB Material/thickness : CEM3 / 1.6mm [0.06]
※ Chassis material : Electric galvanizing steel board
※ Dimensions in mm, [ ]= inches
※ Mounting torque : 0.6N • m(6.3kgf • cm)max
※ Screw tightening torque : M3 0.8N • m(8.5kgf • cm)max
※ Please connect safety ground to the unit in 2-M3 holes.

COSEL AC-DC Power Supplies Enclosed type

PBA15F

Ordering information

PB	A	15	F	-□	-□
①	②	③	④	⑤	⑥

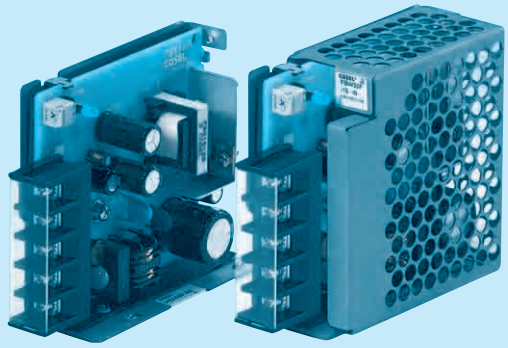

Cover is optional

Recommended EMI/EMC Filter NAC-06-472

High voltage pulse noise type : NAP series
Low leakage current type : NAM series
＊The EMI/EMC Filter is recommended to connect with several devices.

①Series name
②Single output
③Output wattage
④Universal input
⑤Output voltage
⑥Optional ＊5
C :with Coating
G :Low leakage current
E :Low leakage current and EMI class A
T :Vertical terminal block
J :Connector type
N :with Cover (UL508 is acquired [5V, 12V, 24V])
N1 :with DIN rail and Cover
V :Output voltage setting potentiometer externally

MODEL	PBA15F-3R3	PBA15F-5	PBA15F-9	PBA15F-12	PBA15F-15	PBA15F-24	PBA15F-48
MAX OUTPUT WATTAGE[W]	9.9	15	15.3	15.6	15	16.8	16.8
DC OUTPUT	3.3V 3A	5V 3A	9V 1.7A	12V 1.3A	15V 1A	24V 0.7A	48V 0.35A

SPECIFICATIONS

	MODEL		PBA15F-3R3	PBA15F-5	PBA15F-9	PBA15F-12	PBA15F-15	PBA15F-24	PBA15F-48
INPUT	VOLTAGE[V]		AC85 - 264 1φ or DC110 - 370 (AC50 or DC70 Please refer to the instruction manual 2.1 Input voltage ＊3)						
	CURRENT[A]	ACIN 100V	0.30typ (Io=100%)	0.4typ (Io=100%)					
		ACIN 200V	0.15typ (Io=100%)	0.2typ (Io=100%)					
	FREQUENCY[Hz]		50/60 (47 - 440) or DC						
	EFFICIENCY[%]	ACIN 100V	68typ	74typ	75typ	75typ	77typ	75typ	75typ
		ACIN 200V	68typ	75typ	77typ	78typ	80typ	78typ	78typ
	INRUSH CURRENT[A]	ACIN 100V	15typ (Io=100%) (At cold start)						
		ACIN 200V	30typ (Io=100%) (At cold start)						
	LEAKAGE CURRENT[mA]		0.15/0.30max (ACIN 100V/240V 60Hz, Io=100%, According to IEC60950-1,DENAN)						
OUTPUT	VOLTAGE[V]		3.3	5	9	12	15	24	48
	CURRENT[A]		3	3	1.7	1.3	1	0.7	0.35
	LINE REGULATION[mV] ＊6		20max	20max	36max	48max	60max	96max	192max
	LOAD REGULATION[mV] ＊6		40max	40max	100max	100max	120max	150max	240max
	RIPPLE[mVp-p]	0 to +50℃ ＊1	80max	80max	120max	120max	120max	120max	150max
		-10 - 0℃ ＊1	140max	140max	160max	160max	160max	160max	200max
	RIPPLE NOISE[mVp-p]	0 to +50℃ ＊1	120max	120max	150max	150max	150max	150max	250max
		-10 - 0℃ ＊1	160max	160max	180max	180max	180max	180max	300max
	TEMPERATURE REGULATION[mV]	0 to +50℃	50max	50max	90max	120max	150max	240max	480max
		-10 to +50℃	60max	60max	120max	150max	180max	290max	600max
	DRIFT[mV] ＊2		20max	20max	36max	48max	60max	96max	192max
	START-UP TIME[ms]		200typ(ACIN 100V, Io=100%) ＊Start-up time is 700ms typ for less than 1minute of applying input again from turning off the input voltage.						
	HOLD-UP TIME[ms]		20typ (ACIN 100V, Io=100%)						
	OUTPUT VOLTAGE ADJUSTMENT RANGE[V]		2.85 - 3.60	4.50 - 5.50	7.50 - 10.0	10.0 - 13.2	13.2 - 18.0	19.2 - 27.0	39.0 - 53.0
	OUTPUT VOLTAGE SETTING[V]		3.30 - 3.40	5.00 - 5.15	9.00 - 9.36	12.00 - 12.48	15.00 - 15.60	24.00 - 24.96	48.00 - 49.92
PROTECTION CIRCUIT AND OTHERS	OVERCURRENT PROTECTION		Works over 105% of rated current and recovers automatically						
	OVERVOLTAGE PROTECTION[V]		4.00 - 5.25	5.75 - 7.00	11.5 - 14.0	15.0 - 18.0	20.0 - 25.0	30.0 - 37.0	58.0 - 65.0
	OPERATING INDICATION		LED (Green)						
	REMOTE ON/OFF		None						
ISOLATION	INPUT-OUTPUT		AC3,000V 1minute, Cutoff current = 10mA, DC500V 50MΩmin (At Room Temperature)						
	INPUT-FG		AC2,000V 1minute, Cutoff current = 10mA, DC500V 50MΩmin (At Room Temperature)						
	OUTPUT-FG		AC500V 1minute, Cutoff current = 25mA, DC500V 50MΩmin (At Room Temperature)						
ENVIRONMENT	OPERATING TEMP.,HUMID.AND ALTITUDE		-10 to +71℃ (Required Derating), 20 - 90%RH (Non condensing) 3,000m (10,000feet) max						
	STORAGE TEMP.,HUMID.AND ALTITUDE		-20 to +75℃, 20 - 90%RH (Non condensing) 9,000m (30,000feet) max						
	VIBRATION		10 - 55Hz, 19.6m/s² (2G), 3minutes period, 60minutes each along X, Y and Z axis						
	IMPACT		196.1m/s² (20G), 11ms, once each X, Y and Z axis						
SAFETY AND NOISE REGULATIONS	AGENCY APPROVALS (At only AC input)		UL60950-1, C-UL(CSA60950-1), EN60950-1, EN50178 Complies with DEN-AN						
	CONDUCTED NOISE		Complies with FCC Part15 classB, VCCI-B, CISPR22-B, EN55011-B, EN55022-B						
	HARMONIC ATTENUATOR		Complies with IEC61000-3-2 (Not built-in to active filter ＊4) ＊7						
OTHERS	CASE SIZE/WEIGHT		31×78×85mm [1.22×3.07×3.35 inches] (without terminal block) (W×H×D) / 200g max (with cover : 235g max)						
	COOLING METHOD		Convection						

＊1 Measured by 20MHz oscilloscope or Ripple-Noise meter(equivalent to KEISOKU-GIKEN :RM101).
＊2 Drift is the change in DC output for an eight hour period after a half-hour warm-up at 25℃.
＊3 Derating is required.
＊4 When two or more units are used,they may not comply with the harmonic attenuator. Please contact us for details.
＊5 Please contact us about safety approvals for the model with option.
＊6 Please contact us about dynamic load and input response.
＊7 Please contact us about class C.
＊ Parallel operation with other model is not possible.
＊ Derating is required when operated with cover.
＊ A sound may occur from power supply at peak loading.

Block diagram

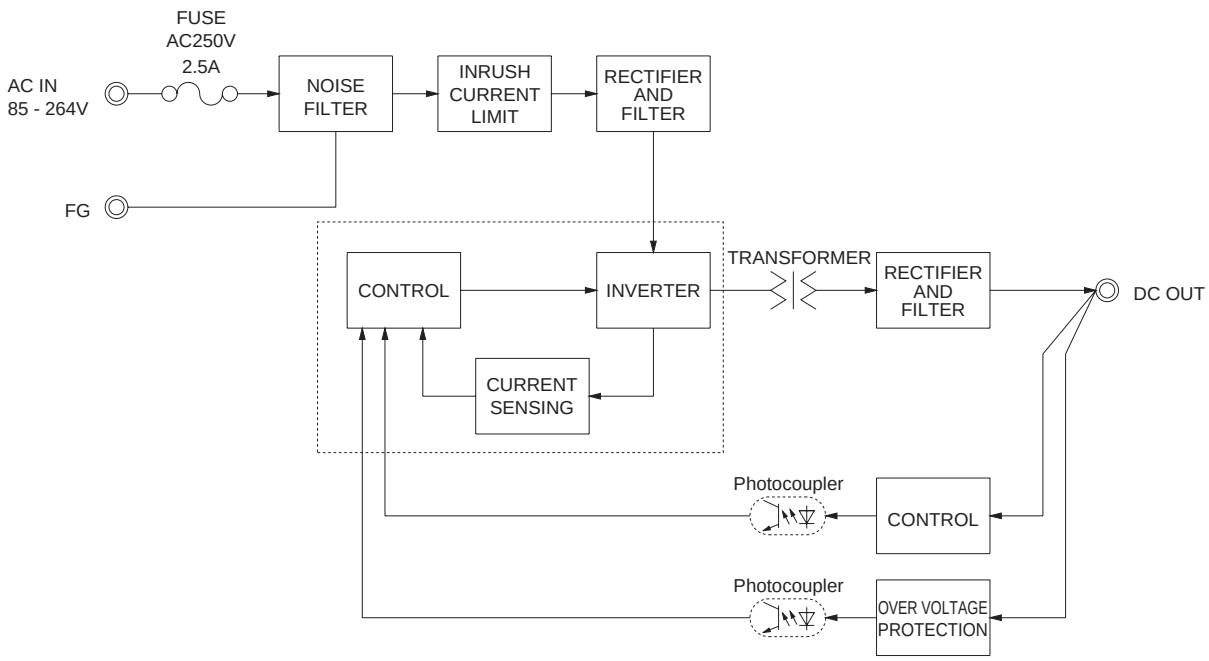

External view

※ External size of option T,J,N,N1 and V is different from standard model and refer to 7 Option of instruction manual for details.

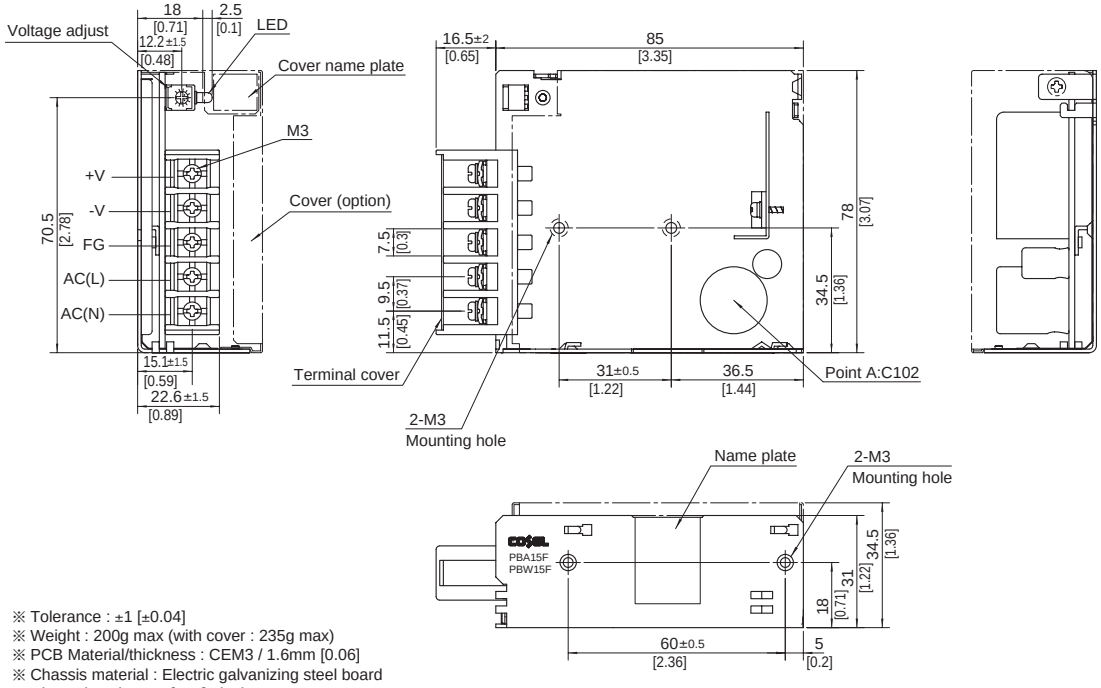

※ Tolerance : ±1 [±0.04]
※ Weight : 200g max (with cover : 235g max)
※ PCB Material/thickness : CEM3 / 1.6mm [0.06]
※ Chassis material : Electric galvanizing steel board
※ Dimensions in mm, [ ]= inches
※ Mounting torque : 0.6N • m(6.3kgf • cm)max
※ Screw tightening torque : M3 0.8N • m(8.5kgf • cm)max
※ Please connect safety ground to the unit in 2-M3 holes.

COSEL AC-DC Power Supplies Enclosed type

PBA30F

Ordering information

PB	A	30	F	-□	-□
①	②	③	④	⑤	⑥

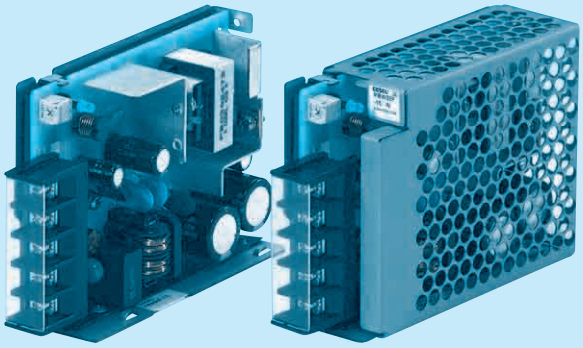

Cover is optional

Recommended EMI/EMC Filter NAC-06-472

High voltage pulse noise type : NAP series
Low leakage current type : NAM series
＊The EMI/EMC Filter is recommended to connect with several devices.

①Series name
②Single output
③Output wattage
④Universal input
⑤Output voltage
⑥Optional ＊5
C :with Coating
G :Low leakage current
E :Low leakage current and EMI class A
T :Vertical terminal block
J :Connector type
N :with Cover (UL508 is acquired [5V, 12V, 24V])
N1 :with DIN rail and Cover
V :Output voltage setting potentiometer externally

MODEL	PBA30F-3R3	PBA30F-5	PBA30F-9	PBA30F-12	PBA30F-15	PBA30F-24	PBA30F-48
MAX OUTPUT WATTAGE[W]	19.8	30	30.6	30	30	31.2	31.2
DC OUTPUT	3.3V 6A	5V 6A	9V 3.4A	12V 2.5A	15V 2A	24V 1.3A	48V 0.65A

SPECIFICATIONS

	MODEL		PBA30F-3R3	PBA30F-5	PBA30F-9	PBA30F-12	PBA30F-15	PBA30F-24	PBA30F-48
INPUT	VOLTAGE[V]		AC85 - 264 1φ or DC110 - 370 (AC50 or DC70 Please refer to the instruction manual 2.1 Input voltage ＊3)						
	CURRENT[A]	ACIN 100V	0.50typ (Io=100%)	0.70typ (Io=100%)					
		ACIN 200V	0.30typ (Io=100%)	0.40typ (Io=100%)					
	FREQUENCY[Hz]		50/60 (47 - 440) or DC						
	EFFICIENCY[%]	ACIN 100V	68typ	74typ	75typ	76typ	78typ	78typ	79typ
		ACIN 200V	69typ	77typ	77typ	78typ	81typ	81typ	81typ
	INRUSH CURRENT[A]	ACIN 100V	15typ (Io=100%) (At cold start)						
		ACIN 200V	30typ (Io=100%) (At cold start)						
	LEAKAGE CURRENT[mA]		0.30/0.65max (ACIN 100V/240V 60Hz, Io=100%, According to IEC60950-1,DENAN)						
OUTPUT	VOLTAGE[V]		3.3	5	9	12	15	24	48
	CURRENT[A]		6	6	3.4	2.5	2	1.3	0.65
	LINE REGULATION[mV]	＊6	20max	20max	36max	48max	60max	96max	192max
	LOAD REGULATION[mV]	＊6	40max	40max	100max	100max	120max	150max	240max
	RIPPLE[mVp-p]	0 to +50℃ ＊1	80max	80max	120max	120max	120max	120max	150max
		-10 - 0℃ ＊1	140max	140max	160max	160max	160max	160max	200max
	RIPPLE NOISE[mVp-p]	0 to +50℃ ＊1	120max	120max	150max	150max	150max	150max	250max
		-10 - 0℃ ＊1	160max	160max	180max	180max	180max	180max	300max
	TEMPERATURE REGULATION[mV]	0 to +50℃	50max	50max	90max	120max	150max	240max	480max
		-10 to +50℃	60max	60max	120max	150max	180max	290max	600max
	DRIFT[mV]	＊2	20max	20max	36max	48max	60max	96max	192max
	START-UP TIME[ms]		200typ(ACIN 100V, Io=100%) ＊Start-up time is 700ms typ for less than 1minute of applying input again from turning off the input voltage.						
	HOLD-UP TIME[ms]		20typ (ACIN 100V, Io=100%)						
	OUTPUT VOLTAGE ADJUSTMENT RANGE[V]		2.85 - 3.60	4.50 - 5.50	7.50 - 10.0	10.0 - 13.2	13.2 - 18.0	19.2 - 27.0	39.0 - 53.0
	OUTPUT VOLTAGE SETTING[V]		3.30 - 3.40	5.00 - 5.15	9.00 - 9.36	12.00 - 12.48	15.00 - 15.60	24.00 - 24.96	48.00 - 49.92
PROTECTION CIRCUIT AND OTHERS	OVERCURRENT PROTECTION		Works over 105% of rated current and recovers automatically						
	OVERVOLTAGE PROTECTION[V]		4.00 - 5.25	5.75 - 7.00	11.5 - 14.0	15.0 - 18.0	20.0 - 25.0	30.0 - 37.0	58.0 - 65.0
	OPERATING INDICATION		LED (Green)						
	REMOTE ON/OFF		None						
ISOLATION	INPUT-OUTPUT		AC3,000V 1minute, Cutoff current = 10mA, DC500V 50MΩmin (At Room Temperature)						
	INPUT-FG		AC2,000V 1minute, Cutoff current = 10mA, DC500V 50MΩmin (At Room Temperature)						
	OUTPUT-FG		AC500V 1minute, Cutoff current = 25mA, DC500V 50MΩmin (At Room Temperature)						
ENVIRONMENT	OPERATING TEMP.,HUMID.AND ALTITUDE		-10 to +71℃ (Required Derating), 20 - 90%RH (Non condensing) 3,000m (10,000feet) max						
	STORAGE TEMP.,HUMID.AND ALTITUDE		-20 to +75℃, 20 - 90%RH (Non condensing) 9,000m (30,000feet) max						
	VIBRATION		10 - 55Hz, 19.6m/s² (2G), 3minutes period, 60minutes each along X, Y and Z axis						
	IMPACT		196.1m/s² (20G), 11ms, once each X, Y and Z axis						
SAFETY AND NOISE REGULATIONS	AGENCY APPROVALS (At only AC input)		UL60950-1, C-UL(CSA60950-1), EN60950-1, EN50178 Complies with DEN-AN						
	CONDUCTED NOISE		Complies with FCC Part15 classB, VCCI-B, CISPR22-B, EN55011-B, EN55022-B						
	HARMONIC ATTENUATOR		Complies with IEC61000-3-2 (Not built-in to active filter ＊4) ＊7						
OTHERS	CASE SIZE/WEIGHT		31×78×103mm [1.22×3.07×4.06 inches] (without terminal block) (W×H×D) / 270g max (with cover : 310g max)						
	COOLING METHOD		Convection						

＊1 Measured by 20MHz oscilloscope or Ripple-Noise meter(equivalent to KEISOKU-GIKEN :RM101).
＊2 Drift is the change in DC output for an eight hour period after a half-hour warm-up at 25℃.
＊3 Derating is required.
＊4 When two or more units are used,they may not comply with the harmonic attenuator. Please contact us for details.
＊5 Please contact us about safety approvals for the model with option.
＊6 Please contact us about dynamic load and input response.
＊7 Please contact us about class C.
＊ Parallel operation with other model is not possible.
＊ Derating is required when operated with cover.
＊ A sound may occur from power supply at peak loading.

Block diagram

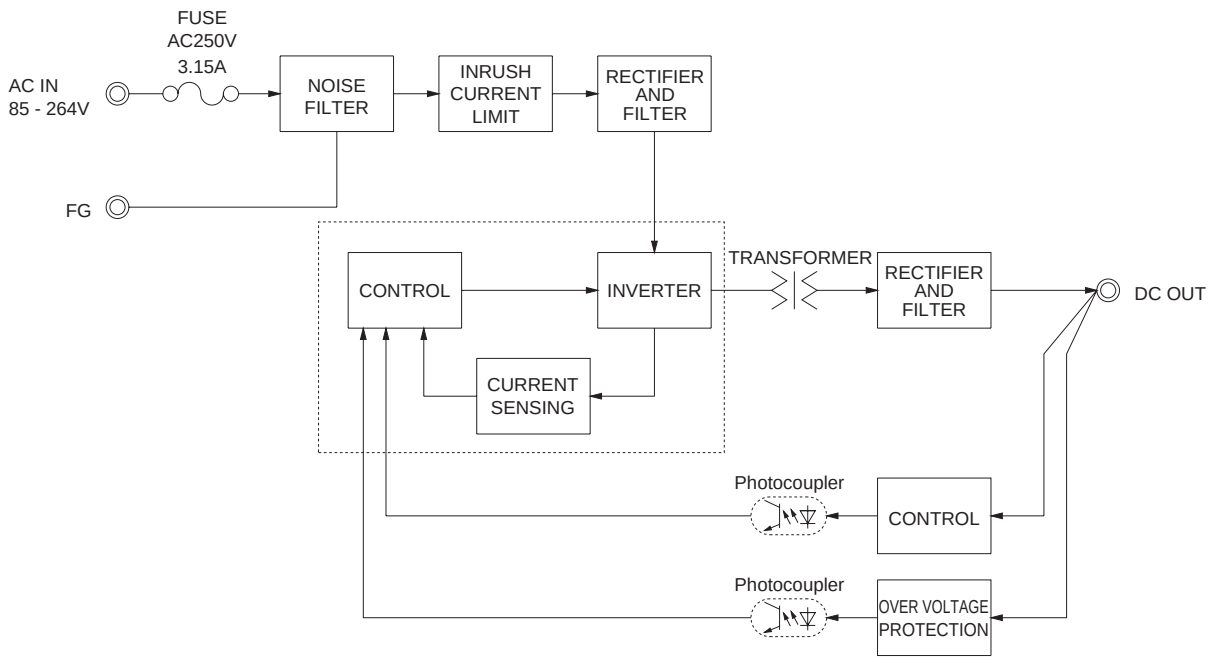

External view

※ External size of option T,J,N,N1 and V is different from standard model and refer to 7 Option of instruction manual for details.

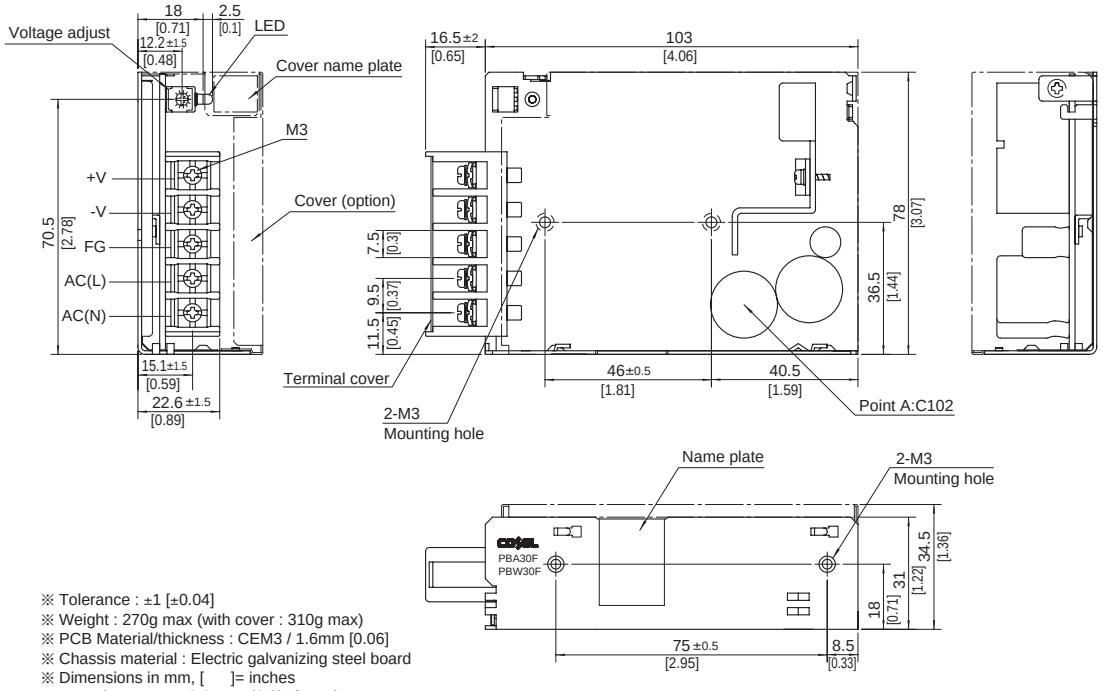

※ Tolerance : ±1 [±0.04]
※ Weight : 270g max (with cover : 310g max)
※ PCB Material/thickness : CEM3 / 1.6mm [0.06]
※ Chassis material : Electric galvanizing steel board
※ Dimensions in mm, [ ]= inches
※ Mounting torque : 0.6N • m(6.3kgf • cm)max
※ Screw tightening torque : M3 0.8N • m(8.5kgf • cm)max
※ Please connect safety ground to the unit in 2-M3 holes.

COSEL AC-DC Power Supplies Enclosed type

PBA50F

Ordering information

PB	A	50	F	-5	-□
①	②	③	④	⑤	⑥

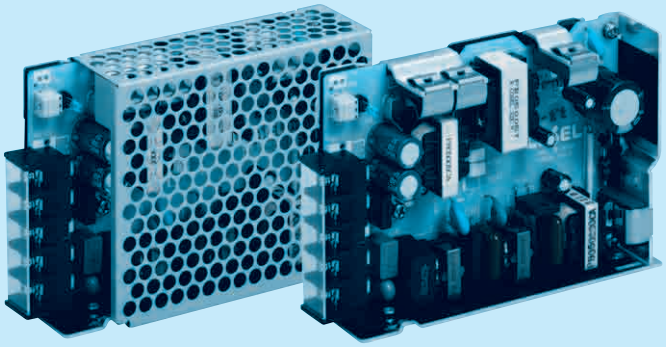

Cover is optional

Recommended EMI/EMC Filter NAC-06-472

High voltage pulse noise type : NAP series
Low leakage current type : NAM series
*The EMI/EMC Filter is recommended to connect with several devices.

①Series name
②Single output
③Output wattage
④Universal input
⑤Output voltage
⑥Optional *5
C :with Coating
G :Low leakage current (0.15mA max / ACIN 240V)
E :Low leakage current and EMI class A (0.5mA max / ACIN 240V)
T :Vertical terminal block
J :Connector type
R :with Remote ON/OFF
N :with Cover (Only 24V UL508 is acquired)
N1 :with DIN rail and Cover
V :Output voltage setting potentiometer externally

MODEL	PBA50F-3R3	PBA50F-5	PBA50F-9	PBA50F-12	PBA50F-15	PBA50F-24	PBA50F-36	PBA50F-48
MAX OUTPUT WATTAGE[W]	33	50	50.4	51.6	52.5	52.8	50.4	52.8
DC OUTPUT	3.3V 10A	5V 10A	9V 5.6A	12V 4.3A	15V 3.5A	24V 2.2A	36V 1.4A	48V 1.1A

SPECIFICATIONS

	MODEL		PBA50F-3R3	PBA50F-5	PBA50F-9	PBA50F-12	PBA50F-15	PBA50F-24	PBA50F-36	PBA50F-48
INPUT	VOLTAGE[V]		AC85 - 264 1φ or DC120 - 370 (AC50 or DC70 Please refer to the instruction manual 2.1 Input voltage *4)							
	CURRENT[A]	ACIN 100V	0.5typ	0.7typ						
		ACIN 200V	0.3typ	0.4typ						
	FREQUENCY[Hz]		50/60 (47 - 63)							
	EFFICIENCY[%]	ACIN 100V	75typ	80typ	79typ	80typ	81typ	82typ	83typ	83typ
		ACIN 200V	76typ	82typ	81typ	82typ	83typ	84typ	85typ	85typ
	POWER FACTOR(Io=100%)	ACIN 100V	0.98typ	0.99typ						
		ACIN 200V	0.87typ	0.93typ						
	INRUSH CURRENT[A]	ACIN 100V	15typ (Io=100%) (At cold start)							
		ACIN 200V	30typ (Io=100%) (At cold start)							
	LEAKAGE CURRENT[mA]		0.4/0.75max (ACIN 100V/240V 60Hz, Io=100%, According to IEC60950-1,DENAN)							
OUTPUT	VOLTAGE[V]		3.3	5	9	12	15	24	36	48
	CURRENT[A]		10	10	5.6	4.3	3.5	2.2	1.4	1.1
	LINE REGULATION[mV]		20max	20max	36max	48max	60max	96max	144max	192max
	LOAD REGULATION[mV]		40max	40max	100max	100max	120max	150max	240max	240max
	RIPPLE[mVp-p]	0 to +50℃ *1	80max	80max	120max	120max	120max	120max	150max	150max
		-10 - 0℃ *1	140max	140max	160max	160max	160max	160max	200max	200max
	RIPPLE NOISE[mVp-p]	0 to +50℃ *1	120max	120max	150max	150max	150max	150max	250max	250max
		-10 - 0℃ *1	160max	160max	180max	180max	180max	180max	300max	300max
	TEMPERATURE REGULATION[mV]	0 to +50℃	50max	50max	90max	120max	150max	240max	360max	480max
		-10 to +50℃	60max	60max	120max	150max	180max	290max	450max	600max
	DRIFT[mV]	*2	20max	20max	36max	48max	60max	96max	144max	192max
	START-UP TIME[ms]		350typ(ACIN 100V, Io=100%)							
	HOLD-UP TIME[ms]		20typ (ACIN 100V, Io=100%)							
	OUTPUT VOLTAGE ADJUSTMENT RANGE[V]		2.85 - 3.63	4.00 - 5.50	7.50 - 10.0	10.0 - 13.2	13.2 - 18.0	19.2 - 27.0	28.8 - 39.6	39.0 - 53.0
	OUTPUT VOLTAGE SETTING[V]		3.30 - 3.40	5.00 - 5.15	9.00 - 9.36	12.00 - 12.48	15.00 - 15.60	24.00 - 24.96	35.00 - 37.44	48.00 - 49.92
PROTECTION CIRCUIT AND OTHERS	OVERCURRENT PROTECTION		Works over 105% of rated current and recovers automatically							
	OVERVOLTAGE PROTECTION[V]		4.00 - 5.25	5.75 - 7.00	11.5 - 14.0	15.0 - 18.0	20.0 - 25.0	30.0 - 37.0	43.0 - 50.0	58.0 - 65.0
	OPERATING INDICATION		LED (Green)							
	REMOTE ON/OFF		Optional (Required external power source)							
ISOLATION	INPUT-OUTPUT · RC	*3	AC3,000V 1minute, Cutoff current = 10mA, DC500V 50MΩmin (At Room Temperature)							
	INPUT-FG		AC2,000V 1minute, Cutoff current = 10mA, DC500V 50MΩmin (At Room Temperature)							
	OUTPUT · RC-FG	*3	AC500V 1minute, Cutoff current = 100mA, DC500V 50MΩmin (At Room Temperature)							
ENVIRONMENT	OPERATING TEMP.,HUMID.AND ALTITUDE		-10 to +71℃ (Required Derating), 20 - 90%RH (Non condensing) 3,000m (10,000feet) max							
	STORAGE TEMP.,HUMID.AND ALTITUDE		-20 to +75℃, 20 - 90%RH (Non condensing) 9,000m (30,000feet) max							
	VIBRATION		10 - 55Hz, 19.6m/s² (2G), 3minutes period, 60minutes each along X, Y and Z axis							
	IMPACT		196.1m/s² (20G), 11ms, once each X, Y and Z axis							
SAFETY AND NOISE REGULATIONS	AGENCY APPROVALS (At only AC input)		UL60950-1, C-UL(CSA60950-1), EN60950-1, EN50178 Complies with DEN-AN							
	CONDUCTED NOISE		Complies with FCC Part15 classB, VCCI-B, CISPR22-B, EN55011-B, EN55022-B							
	HARMONIC ATTENUATOR		Complies with IEC61000-3-2 *6							
OTHERS	CASE SIZE/WEIGHT		31×82×120mm [1.22×3.23×4.72 inches] (without terminal block) (W×H×D) / 280g max (with cover : 325g max)							
	COOLING METHOD		Convection							

*1 Measured by 20MHz oscilloscope or Ripple-Noise meter(equivalent to KEISOKU-GIKEN :RM101).
*2 Drift is the change in DC output for an eight hour period after a half-hour warm-up at 25℃.
*3 Applicable when Remote ON/OFF(optional) is added. RC is insulated with input, output and FG.
*4 Derating is required.
*5 Please contact us about safety approvals for the model with option.
*6 Please contact us about class C.
* Parallel operation with other model is not possible.
* Derating is required when operated with cover.
* A sound may occur from power supply at peak loading.

Block diagram

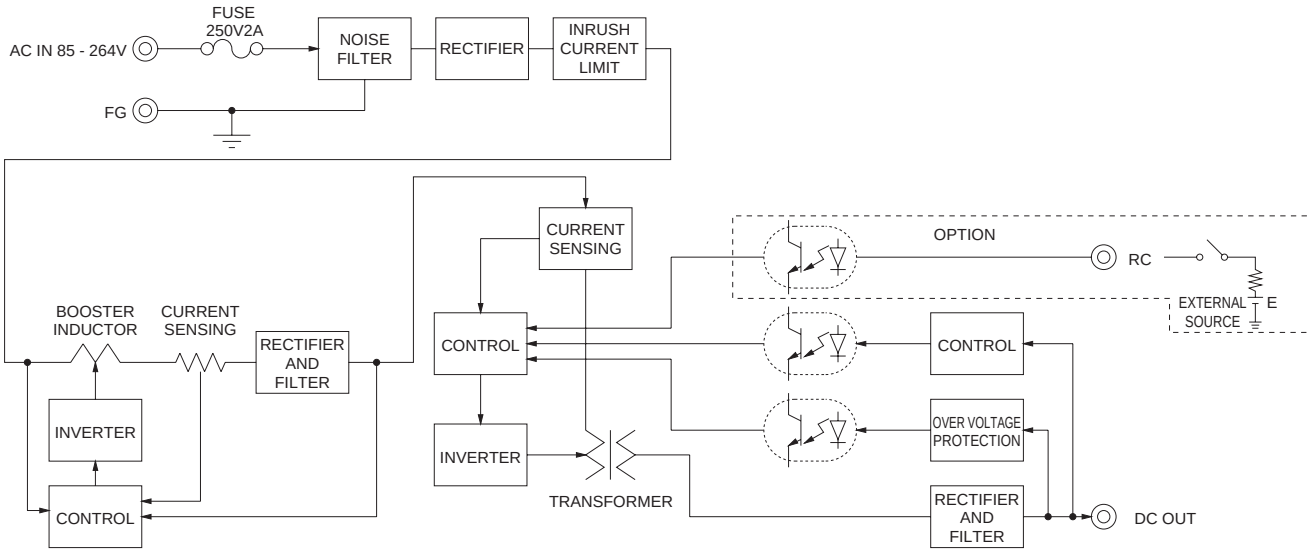

External view

※ External size of option T,J,R,N,N1 and V is different from standard model and refer to 7 Option of instruction manual for details.

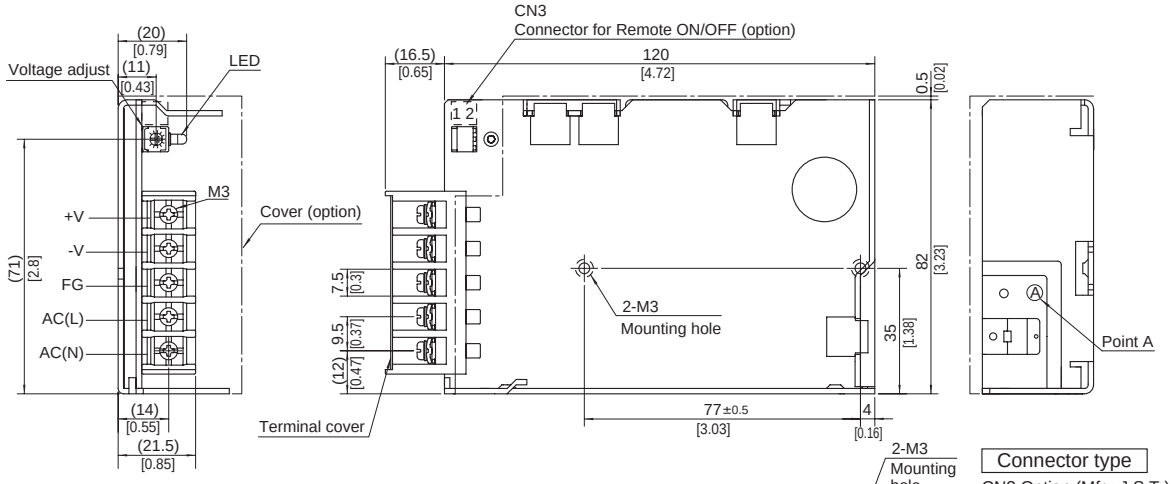

Connector type

CN3 Option (Mfr : J.S.T.)

Pin No.	Contents
1	RC(+)
2	RC(-)

Barrier strip type

Model B2B-XH-A
Mating Connector (Terminal)
XHP-2
(BXH-001T-P0.6 or SXH-001T-P0.6)

※ Tolerance : ±1 [±0.04]
※ Weight : 280g max (with cover : 325g max)
※ PCB Material/thickness : CEM3 / 1.6mm [0.06]
※ Chassis material : Aluminum
※ Dimensions in mm, [ ]= inches
※ Mounting torque : 0.49N • m(5kgf • cm)max
※ Screw tightening torque : M3 0.8N • m(8.5kgf • cm)max
※ Please connect safety ground to the unit in 2-M3 holes.

COSEL AC-DC Power Supplies Enclosed type

PBA75F

Ordering information

PB	A	75	F	-5	-□
①	②	③	④	⑤	⑥

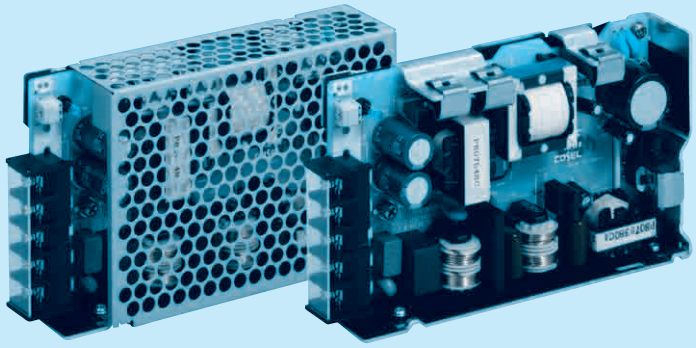

Cover is optional

Recommended EMI/EMC Filter NAC-06-472

High voltage pulse noise type : NAP series
Low leakage current type : NAM series
*The EMI/EMC Filter is recommended to connect with several devices.

①Series name
②Single output
③Output wattage
④Universal input
⑤Output voltage
⑥Optional *5
C :with Coating
G :Low leakage current (0.15mA max / ACIN 240V)
E :Low leakage current and EMI class A (0.5mA max / ACIN 240V)
T :Vertical terminal block
J :Connector type
R :with Remote ON/OFF
N :with Cover (Only 24V UL508 is acquired)
N1 :with DIN rail and Cover
V :Output voltage setting potentiometer externally

MODEL	PBA75F-3R3	PBA75F-5	PBA75F-9	PBA75F-12	PBA75F-15	PBA75F-24	PBA75F-36	PBA75F-48
MAX OUTPUT WATTAGE[W]	49.5	75	75.6	75.6	75	76.8	75.6	76.8
DC OUTPUT	3.3V 15A	5V 15A	9V 8.4A	12V 6.3A	15V 5A	24V 3.2A	36V 2.1A	48V 1.6A

SPECIFICATIONS

	MODEL		PBA75F-3R3	PBA75F-5	PBA75F-9	PBA75F-12	PBA75F-15	PBA75F-24	PBA75F-36	PBA75F-48
INPUT	VOLTAGE[V]		AC85 - 264 1φ or DC120 - 370 (AC50 or DC70 Please refer to the instruction manual 2.1 Input voltage *4)							
	CURRENT[A]	ACIN 100V	0.7typ	1.0typ						
		ACIN 200V	0.4typ	0.5typ						
	FREQUENCY[Hz]		50/60 (47 - 63)							
	EFFICIENCY[%]	ACIN 100V	77typ	81typ	80typ	81typ	82typ	83typ	84typ	84typ
		ACIN 200V	78typ	83typ	82typ	83typ	84typ	85typ	86typ	86typ
	POWER FACTOR(Io=100%)	ACIN 100V	0.98typ	0.99typ						
		ACIN 200V	0.87typ	0.93typ						
	INRUSH CURRENT[A]	ACIN 100V	15typ (Io=100%) (At cold start)							
		ACIN 200V	30typ (Io=100%) (At cold start)							
	LEAKAGE CURRENT[mA]		0.4/0.75max (ACIN 100V/240V 60Hz, Io=100%, According to IEC60950-1,DENAN)							
OUTPUT	VOLTAGE[V]		3.3	5	9	12	15	24	36	48
	CURRENT[A]		15	15	8.4	6.3	5	3.2	2.1	1.6
	LINE REGULATION[mV]		20max	20max	36max	48max	60max	96max	144max	192max
	LOAD REGULATION[mV]		40max	40max	100max	100max	120max	150max	240max	240max
	RIPPLE[mVp-p]	0 to +50℃ *1	80max	80max	120max	120max	120max	120max	150max	150max
		-10 - 0℃ *1	140max	140max	160max	160max	160max	160max	200max	200max
	RIPPLE NOISE[mVp-p]	0 to +50℃ *1	120max	120max	150max	150max	150max	150max	250max	250max
		-10 - 0℃ *1	160max	160max	180max	180max	180max	180max	300max	300max
	TEMPERATURE REGULATION[mV]	0 to +50℃	50max	50max	90max	120max	150max	240max	360max	480max
		-10 to +50℃	60max	60max	120max	150max	180max	290max	450max	600max
	DRIFT[mV]	*2	20max	20max	36max	48max	60max	96max	144max	192max
	START-UP TIME[ms]		350typ(ACIN 100V, Io=100%)							
	HOLD-UP TIME[ms]		20typ (ACIN 100V, Io=100%)							
	OUTPUT VOLTAGE ADJUSTMENT RANGE[V]		2.85 - 3.63	4.00 - 5.50	7.50 - 10.0	10.0 - 13.2	13.2 - 18.0	19.2 - 27.0	28.8 - 39.6	39.0 - 53.0
	OUTPUT VOLTAGE SETTING[V]		3.30 - 3.40	5.00 - 5.15	9.00 - 9.36	12.00 - 12.48	15.00 - 15.60	24.00 - 24.96	36.00 - 37.44	48.00 - 49.92
PROTECTION CIRCUIT AND OTHERS	OVERCURRENT PROTECTION		Works over 105% of rated current and recovers automatically							
	OVERVOLTAGE PROTECTION[V]		4.00 - 5.25	5.75 - 7.00	11.5 - 14.0	15.0 - 18.0	20.0 - 25.0	30.0 - 37.0	43.0 - 50.0	58.0 - 65.0
	OPERATING INDICATION		LED (Green)							
	REMOTE ON/OFF		Optional (Required external power source)							
ISOLATION	INPUT-OUTPUT · RC	*3	AC3,000V 1minute, Cutoff current = 10mA, DC500V 50MΩmin (At Room Temperature)							
	INPUT-FG		AC2,000V 1minute, Cutoff current = 10mA, DC500V 50MΩmin (At Room Temperature)							
	OUTPUT · RC-FG	*3	AC500V 1minute, Cutoff current = 100mA, DC500V 50MΩmin (At Room Temperature)							
ENVIRONMENT	OPERATING TEMP.,HUMID.AND ALTITUDE		-10 to +71℃ (Required Derating), 20 - 90%RH (Non condensing) 3,000m (10,000feet) max							
	STORAGE TEMP.,HUMID.AND ALTITUDE		-20 to +75℃, 20 - 90%RH (Non condensing) 9,000m (30,000feet) max							
	VIBRATION		10 - 55Hz, 19.6m/s² (2G), 3minutes period, 60minutes each along X, Y and Z axis							
	IMPACT		196.1m/s² (20G), 11ms, once each X, Y and Z axis							
SAFETY AND NOISE REGULATIONS	AGENCY APPROVALS (At only AC input)		UL60950-1, C-UL(CSA60950-1), EN60950-1, EN50178 Complies with DEN-AN							
	CONDUCTED NOISE		Complies with FCC Part15 classB, VCCI-B, CISPR22-B, EN55011-B, EN55022-B							
	HARMONIC ATTENUATOR		Complies with IEC61000-3-2 *6							
OTHERS	CASE SIZE/WEIGHT		32×82×135mm [1.26×3.23×5.31 inches] (without terminal block) (W×H×D) / 350g max (with cover : 400g max)							
	COOLING METHOD		Convection							

*1 Measured by 20MHz oscilloscope or Ripple-Noise meter(equivalent to KEISOKU-GIKEN :RM101).
*2 Drift is the change in DC output for an eight hour period after a half-hour warm-up at 25℃.
*3 Applicable when Remote ON/OFF(optional) is added. RC is insulated with input, output and FG.
*4 Derating is required.
*5 Please contact us about safety approvals for the model with option.
*6 Please contact us about class C.
* Parallel operation with other model is not possible.
* Derating is required when operated with cover.
* A sound may occur from power supply at peak loading.

Block diagram

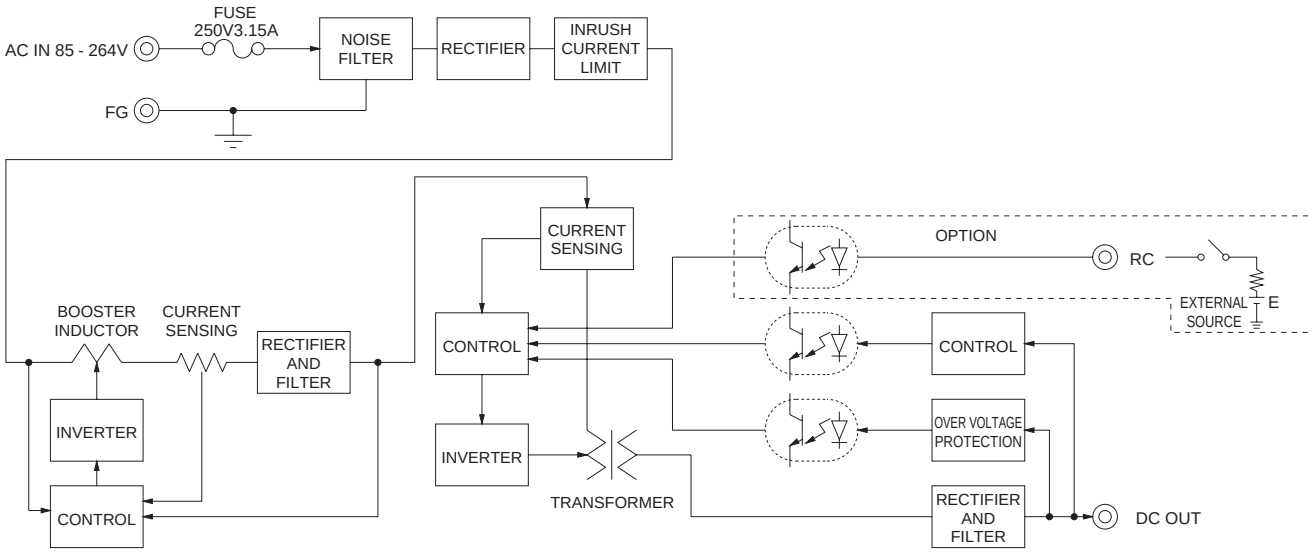

External view

※ External size of option T,J,R,N,N1 and V is different from standard model and refer to 7 Option of instruction manual for details.

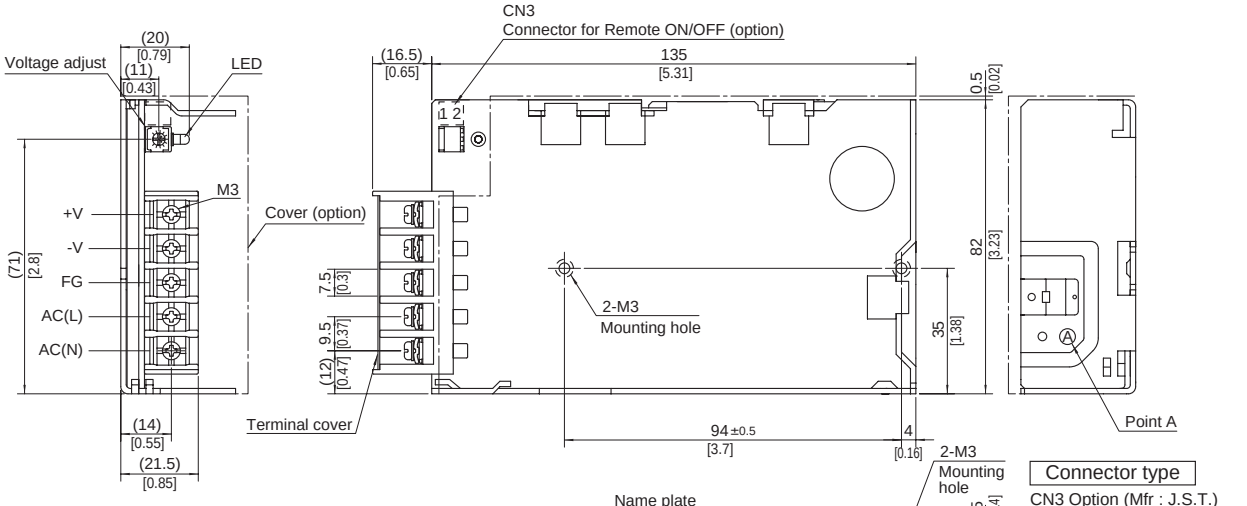

Connector type

CN3 Option (Mfr : J.S.T.)

Pin No.	Contents
1	RC(+)
2	RC(-)

Barrier strip type

Model B2B-XH-A
Mating Connector (Terminal)
XHP-2
(BXH-001T-P0.6 or SXH-001T-P0.6)

※ Tolerance : ±1 [±0.04]
※ Weight : 350g max (with cover : 400g max)
※ PCB Material/thickness : CEM3 / 1.6mm [0.06]
※ Chassis material : Aluminum
※ Dimensions in mm, [ ]= inches
※ Mounting torque : 0.49N • m(5kgf • cm)max
※ Screw tightening torque : M3 0.8N • m(8.5kgf • cm)max
※ Please connect safety ground to the unit in 2-M3 holes.

COSEL AC-DC Power Supplies Enclosed type

PBA100F

Ordering information

PB	A	100	F	-5	-□
①	②	③	④	⑤	⑥

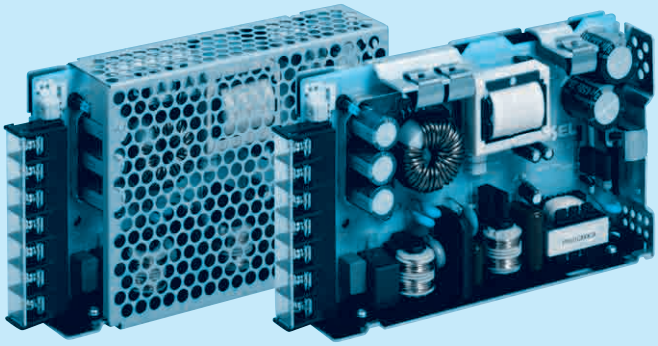

Cover is optional

Recommended EMI/EMC Filter NAC-06-472

High voltage pulse noise type : NAP series
Low leakage current type : NAM series
*The EMI/EMC Filter is recommended to connect with several devices.

①Series name
②Single output
③Output wattage
④Universal input
⑤Output voltage
⑥Optional *5
- C :with Coating
- G :Low leakage current (0.15mA max / ACIN 240V)
- E :Low leakage current and EMI class A (0.5mA max / ACIN 240V)
- T :Vertical terminal block
- J :Connector type (Only -12,-15,-24,-36,-48)
- R :with Remote ON/OFF
- N :with Cover (Only 24V UL508 is acquired)
- N1 :with DIN rail and Cover
- V :Output voltage setting potentiometer externally

MODEL	PBA100F-3R3	PBA100F-5	PBA100F-9	PBA100F-12	PBA100F-15	PBA100F-24	PBA100F-36	PBA100F-48
MAX OUTPUT WATTAGE[W]	66	100	94.5	102	105	108	100.8	100.8
DC OUTPUT	3.3V 20A	5V 20A	9V 10.5A	12V 8.5A	15V 7A	24V 4.5A	36V 2.8A	48V 2.1A

SPECIFICATIONS

	MODEL		PBA100F-3R3	PBA100F-5	PBA100F-9	PBA100F-12	PBA100F-15	PBA100F-24	PBA100F-36	PBA100F-48
INPUT	VOLTAGE[V]		AC85 - 264 1φ or DC120 - 370 (AC50 or DC70 Please refer to the instruction manual 2.1 Input voltage *4)							
	CURRENT[A]	ACIN 100V	0.9typ	1.3typ						
		ACIN 200V	0.5typ	0.7typ						
	FREQUENCY[Hz]		50/60 (47 - 63)							
	EFFICIENCY[%]	ACIN 100V	77typ	82typ	80typ	81typ	83typ	84typ	84typ	84typ
		ACIN 200V	79typ	84typ	82typ	83typ	86typ	86typ	86typ	86typ
	POWER FACTOR(Io=100%)	ACIN 100V	0.98typ	0.99typ						
		ACIN 200V	0.87typ	0.93typ						
	INRUSH CURRENT[A]	ACIN 100V	20typ (Io=100%) (At cold start)							
		ACIN 200V	40typ (Io=100%) (At cold start)							
	LEAKAGE CURRENT[mA]		0.4/0.75max (ACIN 100V/240V 60Hz, Io=100%, According to IEC60950-1,DENAN)							
OUTPUT	VOLTAGE[V]		3.3	5	9	12	15	24	36	48
	CURRENT[A]		20	20	10.5	8.5	7	4.5	2.8	2.1
	LINE REGULATION[mV]		20max	20max	36max	48max	60max	96max	144max	192max
	LOAD REGULATION[mV]		40max	40max	100max	100max	120max	150max	240max	240max
	RIPPLE[mVp-p]	0 to +50℃ *1	80max	80max	120max	120max	120max	120max	150max	150max
		-10 - 0℃ *1	140max	140max	160max	160max	160max	160max	200max	200max
	RIPPLE NOISE[mVp-p]	0 to +50℃ *1	120max	120max	150max	150max	150max	150max	250max	250max
		-10 - 0℃ *1	160max	160max	180max	180max	180max	180max	300max	300max
	TEMPERATURE REGULATION[mV]	0 to +50℃	50max	50max	90max	120max	150max	240max	360max	480max
		-10 to +50℃	60max	60max	120max	150max	180max	290max	450max	600max
	DRIFT[mV]	*2	20max	20max	36max	48max	60max	96max	144max	192max
	START-UP TIME[ms]		350typ(ACIN 100V, Io=100%)							
	HOLD-UP TIME[ms]		20typ (ACIN 100V, Io=100%)							
	OUTPUT VOLTAGE ADJUSTMENT RANGE[V]		2.85 - 3.63	4.00 - 5.50	7.50 - 10.0	10.0 - 13.2	13.2 - 18.0	19.2 - 27.0	28.8 - 39.6	39.0 - 53.0
	OUTPUT VOLTAGE SETTING[V]		3.20 - 3.40	5.00 - 5.15	9.00 - 9.36	12.00 - 12.48	15.00 - 15.60	24.00 - 24.96	36.00 - 37.44	48.00 - 49.92
PROTECTION CIRCUIT AND OTHERS	OVERCURRENT PROTECTION		Works over 105% of rated current and recovers automatically							
	OVERVOLTAGE PROTECTION[V]		4.00 - 5.25	5.75 - 7.00	11.5 - 14.0	15.0 - 18.0	20.0 - 25.0	30.0 - 37.0	43.0 - 50.0	58.0 - 65.0
	OPERATING INDICATION		LED (Green)							
	REMOTE SENSING		Optional (Only -3R3, -5 Option -K)							
	REMOTE ON/OFF		Optional (Required external power source)							
ISOLATION	INPUT-OUTPUT · RC	*3	AC3,000V 1minute, Cutoff current = 10mA, DC500V 50MΩmin (At Room Temperature)							
	INPUT-FG		AC2,000V 1minute, Cutoff current = 10mA, DC500V 50MΩmin (At Room Temperature)							
	OUTPUT · RC-FG	*3	AC500V 1minute, Cutoff current = 100mA, DC500V 50MΩmin (At Room Temperature)							
ENVIRONMENT	OPERATING TEMP.,HUMID.AND ALTITUDE		-10 to +71℃ (Required Derating), 20 - 90%RH (Non condensing) 3,000m (10,000feet) max							
	STORAGE TEMP.,HUMID.AND ALTITUDE		-20 to +75℃, 20 - 90%RH (Non condensing) 9,000m (30,000feet) max							
	VIBRATION		10 - 55Hz, 19.6m/s² (2G), 3minutes period, 60minutes each along X, Y and Z axis							
	IMPACT		196.1m/s² (20G), 11ms, once each X, Y and Z axis							
SAFETY AND NOISE REGULATIONS	AGENCY APPROVALS (At only AC input)		UL60950-1, C-UL(CSA60950-1), EN60950-1, EN50178 Complies with DEN-AN							
	CONDUCTED NOISE		Complies with FCC Part15 classB, VCCI-B, CISPR22-B, EN55011-B, EN55022-B							
	HARMONIC ATTENUATOR		Complies with IEC61000-3-2 *6							
OTHERS	CASE SIZE/WEIGHT		32×93×147mm [1.26×3.66×5.79 inches] (without terminal block) (W×H×D) / 440g max (with cover : 500g max)							
	COOLING METHOD		Convection							

*1 Measured by 20MHz oscilloscope or Ripple-Noise meter(equivalent to KEISOKU-GIKEN :RM101).
*2 Drift is the change in DC output for an eight hour period after a half-hour warm-up at 25℃.
*3 Applicable when Remote ON/OFF(optional) is added. RC is insulated with input, output and FG.
*4 Derating is required.
*5 Please contact us about safety approvals for the model with option.
*6 Please contact us about class C.
* Parallel operation with other model is not possible.
* Derating is required when operated with cover.
* A sound may occur from power supply at peak loading.

Block diagram

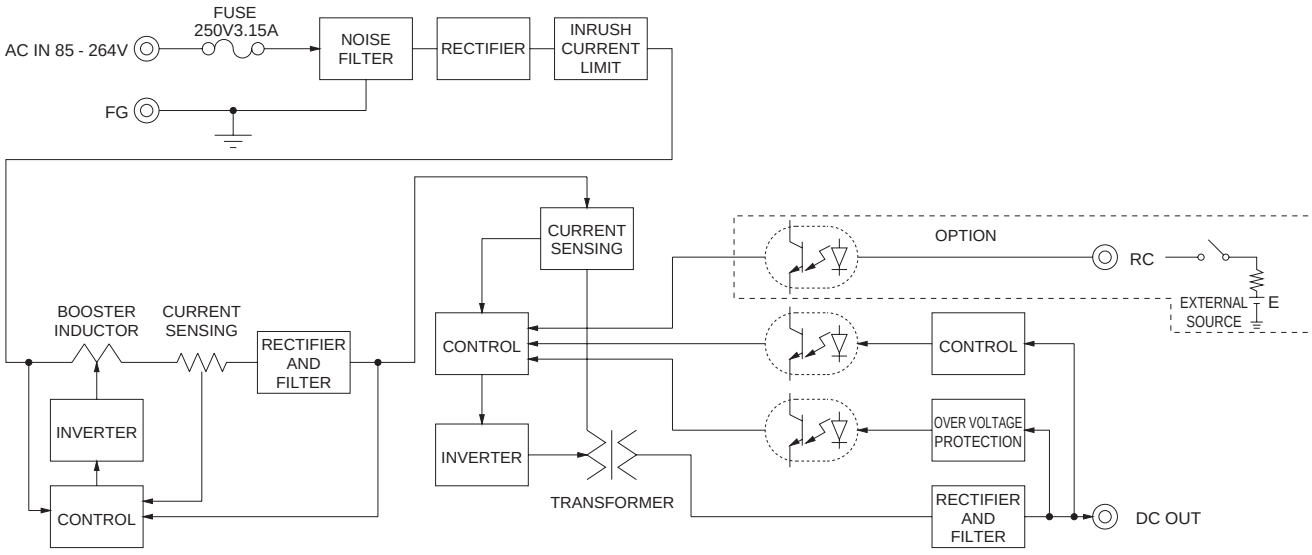

External view

※ External size of option T,J,R,N,N1,V and K is different from standard model and refer to 7 Option of instruction manual for details.

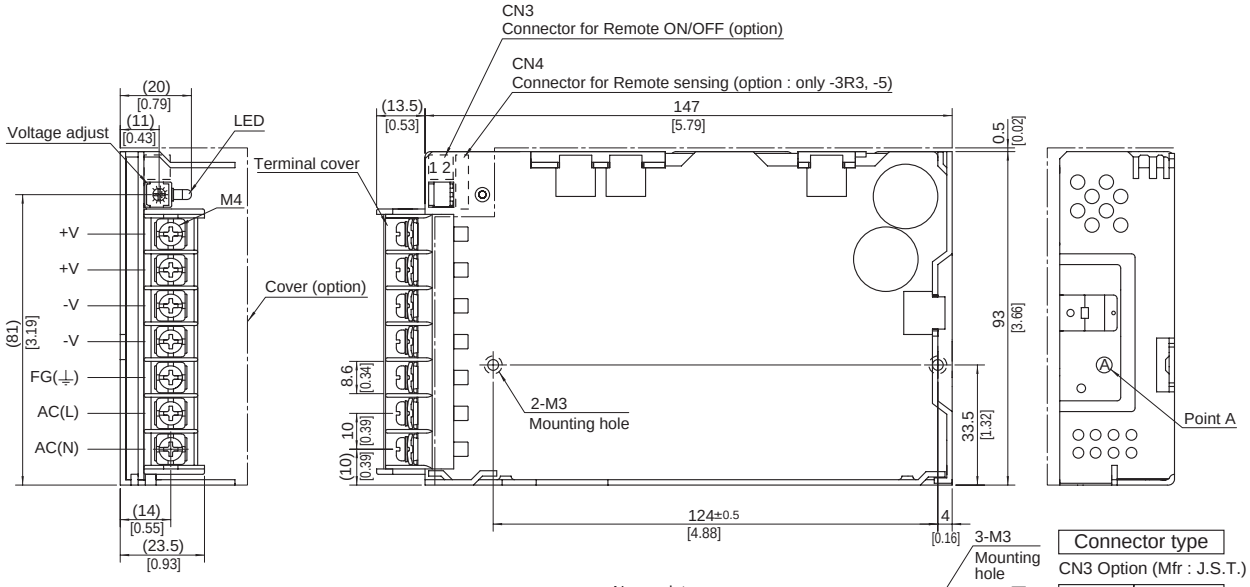

Connector type

CN3 Option (Mfr : J.S.T.)

Pin No.	Contents
1	RC(+)
2	RC(-)

Barrier strip type

Model B2B-XH-A
Mating Connector (Terminal)
XHP-2
(BXH-001T-P0.6
or SXH-001T-P0.6)

※ Tolerance : ±1 [±0.04]
※ Weight : 440g max (with cover : 500g max)
※ PCB Material/thickness : CEM3 / 1.6mm [0.06]
※ Chassis material : Aluminum
※ Dimensions in mm, [ ]= inches
※ Mounting torque : 0.49N • m(5kgf • cm)max
※ Mounting torque : M4:1.6N • m(16.9kgf • cm)max
※ Please connect safety ground to FG terminal on the unit.

COSEL AC-DC Power Supplies Enclosed type

PBA150F

Ordering information

PB	A	150	F	-5	-□
①	②	③	④	⑤	⑥

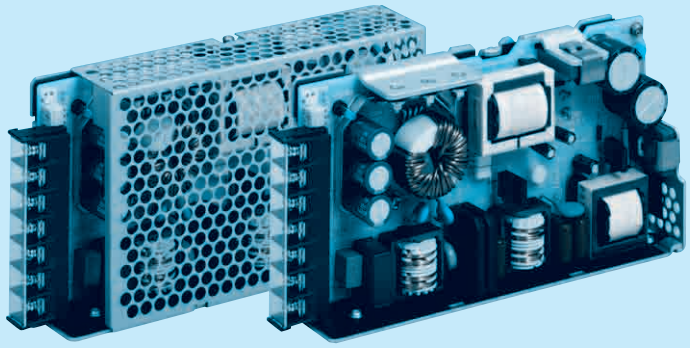

Cover is optional

Recommended EMI/EMC Filter NAC-06-472

High voltage pulse noise type : NAP series
Low leakage current type : NAM series
＊The EMI/EMC Filter is recommended to connect with several devices.

①Series name
②Single output
③Output wattage
④Universal input
⑤Output voltage
⑥Optional ＊5
C :with Coating
G :Low leakage current (0.15mA max / ACIN 240V)
E :Low leakage current and EMI class A (0.5mA max / ACIN 240V)
T :Vertical terminal block
J :Connector type (Only -12,-15,-24,-36,-48)
R :with Remote ON/OFF
N :with Cover (Only 24V UL508 is acquired)
N1 :with DIN rail and Cover
V :Output voltage setting potentiometer externally

MODEL	PBA150F-3R3	PBA150F-5	PBA150F-9	PBA150F-12	PBA150F-15	PBA150F-24	PBA150F-36	PBA150F-48
MAX OUTPUT WATTAGE[W]	99	150	150.3	156	150	156	154.8	158.4
DC OUTPUT	3.3V 30A	5V 30A	9V 16.7A	12V 13A	15V 10A	24V 6.5A	36V 4.3A	48V 3.3A

SPECIFICATIONS

	MODEL		PBA150F-3R3	PBA150F-5	PBA150F-9	PBA150F-12	PBA150F-15	PBA150F-24	PBA150F-36	PBA150F-48
INPUT	VOLTAGE[V]		AC85 - 264 1φ or DC120 - 370 (AC50 or DC70 Please refer to the instruction manual 2.1 Input voltage ＊4)							
	CURRENT[A]	ACIN 100V	1.3typ	2.0typ						
		ACIN 200V	0.7typ	1.0typ						
	FREQUENCY[Hz]		50/60 (47 - 63)							
	EFFICIENCY[%]	ACIN 100V	80typ	83typ	82typ	83typ	84typ	85typ	85typ	85typ
		ACIN 200V	82typ	86typ	85typ	86typ	87typ	88typ	88typ	88typ
	POWER FACTOR(Io=100%)	ACIN 100V	0.98typ	0.99typ						
		ACIN 200V	0.87typ	0.93typ						
	INRUSH CURRENT[A]	ACIN 100V	20typ (Io=100%) (At cold start)							
		ACIN 200V	40typ (Io=100%) (At cold start)							
	LEAKAGE CURRENT[mA]		0.4/0.75max (ACIN 100V/240V 60Hz, Io=100%, According to IEC60950-1,DENAN)							
OUTPUT	VOLTAGE[V]		3.3	5	9	12	15	24	36	48
	CURRENT[A]		30	30	16.7	13	10	6.5	4.3	3.3
	LINE REGULATION[mV]		20max	20max	36max	48max	60max	96max	144max	192max
	LOAD REGULATION[mV]		40max	40max	100max	100max	120max	150max	240max	240max
	RIPPLE[mVp-p]	0 to +50℃ ＊1	80max	80max	120max	120max	120max	120max	150max	150max
		-10 - 0℃ ＊1	140max	140max	160max	160max	160max	160max	200max	200max
	RIPPLE NOISE[mVp-p]	0 to +50℃ ＊1	120max	120max	150max	150max	150max	150max	250max	250max
		-10 - 0℃ ＊1	160max	160max	180max	180max	180max	180max	300max	300max
	TEMPERATURE REGULATION[mV]	0 to +50℃	50max	50max	90max	120max	150max	240max	360max	480max
		-10 to +50℃	60max	60max	120max	150max	180max	290max	450max	600max
	DRIFT[mV] ＊2		20max	20max	36max	48max	60max	96max	144max	192max
	START-UP TIME[ms]		350typ(ACIN 100V, Io=100%)							
	HOLD-UP TIME[ms]		20typ (ACIN 100V, Io=100%)							
	OUTPUT VOLTAGE ADJUSTMENT RANGE[V]		2.85 - 3.63	4.00 - 5.50	7.50 - 10.0	10.0 - 13.2	13.2 - 18.0	19.2 - 27.0	28.8 - 39.6	39.0 - 53.0
	OUTPUT VOLTAGE SETTING[V]		3.30 - 3.40	5.00 - 5.15	9.00 - 9.36	12.00 - 12.48	15.00 - 15.60	24.00 - 24.96	36.00 - 37.44	48.00 - 49.92
PROTECTION CIRCUIT AND OTHERS	OVERCURRENT PROTECTION		Works over 105% of rated current and recovers automatically							
	OVERVOLTAGE PROTECTION[V]		4.00 - 5.25	5.75 - 7.00	11.5 - 14.0	15.0 - 18.0	20.0 - 25.0	30.0 - 37.0	43.0 - 50.0	58.0 - 65.0
	OPERATING INDICATION		LED (Green)							
	REMOTE SENSING		Optional (Only -3R3, -5 Option -K)							
	REMOTE ON/OFF		Optional (Required external power source)							
ISOLATION	INPUT-OUTPUT · RC ＊3		AC3,000V 1minute, Cutoff current = 10mA, DC500V 50MΩmin (At Room Temperature)							
	INPUT-FG		AC2,000V 1minute, Cutoff current = 10mA, DC500V 50MΩmin (At Room Temperature)							
	OUTPUT · RC-FG ＊3		AC500V 1minute, Cutoff current = 100mA, DC500V 50MΩmin (At Room Temperature)							
ENVIRONMENT	OPERATING TEMP.,HUMID.AND ALTITUDE		-10 to +71℃ (Required Derating), 20 - 90%RH (Non condensing) 3,000m (10,000feet) max							
	STORAGE TEMP.,HUMID.AND ALTITUDE		-20 to +75℃, 20 - 90%RH (Non condensing) 9,000m (30,000feet) max							
	VIBRATION		10 - 55Hz, 19.6m/s² (2G), 3minutes period, 60minutes each along X, Y and Z axis							
	IMPACT		196.1m/s² (20G), 11ms, once each X, Y and Z axis							
SAFETY AND NOISE REGULATIONS	AGENCY APPROVALS (At only AC input)		UL60950-1, C-UL(CSA60950-1), EN60950-1, EN50178 Complies with DEN-AN							
	CONDUCTED NOISE		Complies with FCC Part15 classB, VCCI-B, CISPR22-B, EN55011-B, EN55022-B							
	HARMONIC ATTENUATOR		Complies with IEC61000-3-2 ＊6							
OTHERS	CASE SIZE/WEIGHT		34×93×168mm [1.34×3.66×6.61 inches] (without terminal block) (W×H×D) / 560g max (with cover : 630g max)							
	COOLING METHOD		Convection							

＊1 Measured by 20MHz oscilloscope or Ripple-Noise meter(equivalent to KEISOKU-GIKEN :RM101).
＊2 Drift is the change in DC output for an eight hour period after a half-hour warm-up at 25℃.
＊3 Applicable when Remote ON/OFF(optional) is added. RC is insulated with input, output and FG.
＊4 Derating is required.
＊5 Please contact us about safety approvals for the model with option.
＊6 Please contact us about class C.
＊ Parallel operation with other model is not possible.
＊ Derating is required when operated with cover.
＊ A sound may occur from power supply at peak loading.

Block diagram

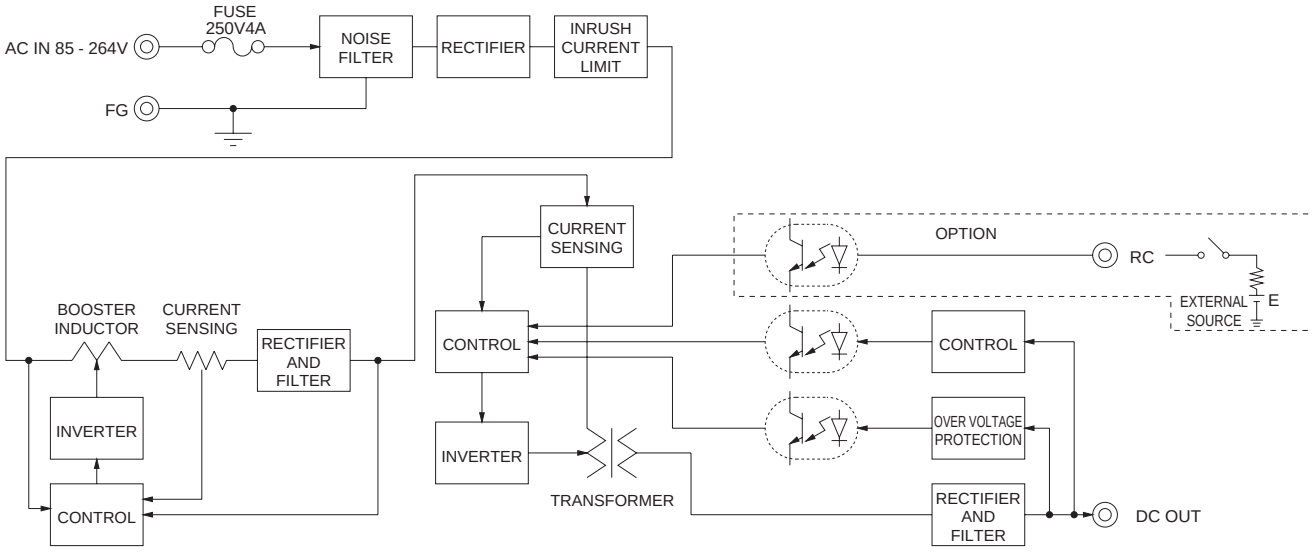

External view

※ External size of option T,J,R,N,N1,V and K is different from standard model and refer to 7 Option of instruction manual for details.

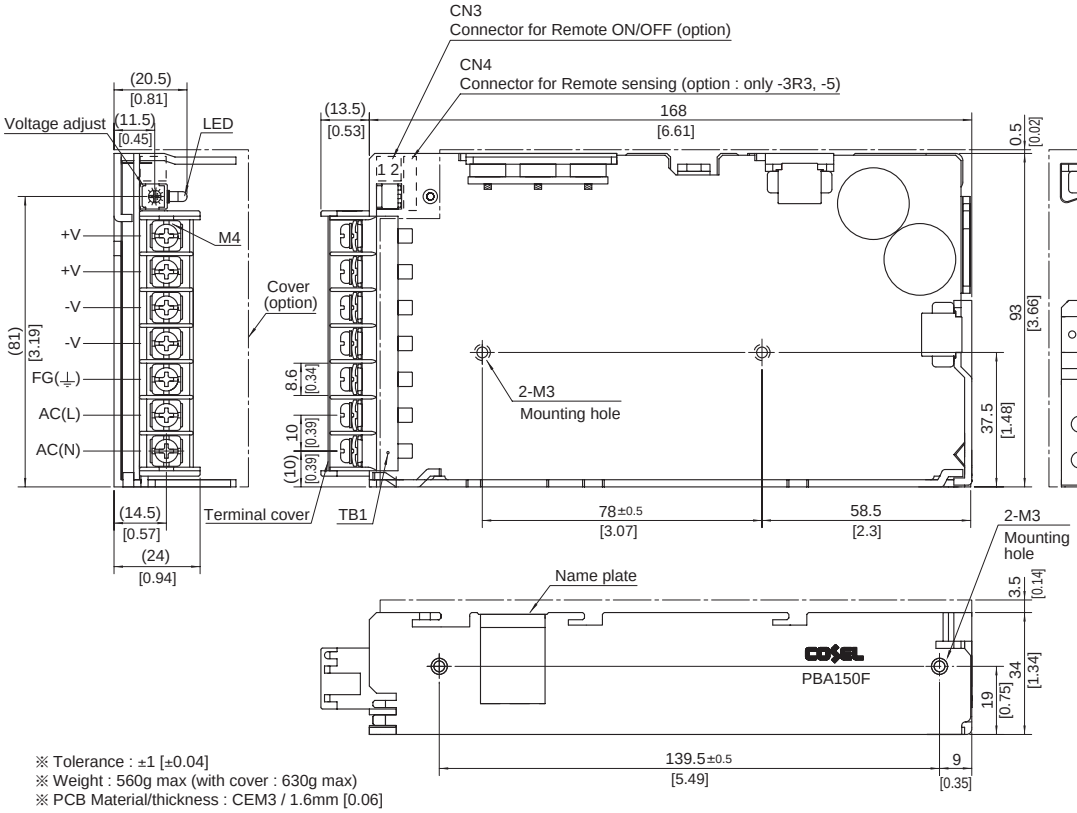

Connector type

CN3 Option (Mfr : J.S.T.)

Pin No.	Contents
1	RC(+)
2	RC(-)

Barrier strip type

Model B2B-XH-A
Mating Connector (Terminal)
XHP-2
(BXH-001T-P0.6 or SXH-001T-P0.6)

※ Tolerance : ±1 [±0.04]
※ Weight : 560g max (with cover : 630g max)
※ PCB Material/thickness : CEM3 / 1.6mm [0.06]
※ Chassis material : Aluminum
※ Dimensions in mm, [ ]= inches
※ Mounting torque : 0.49N • m(5kgf • cm)max
※ Mounting torque : M4:1.6N • m(16.9kgf • cm)max
※ Keep drawing current per pin below 20A for TB1.

Mouser Electronics

Authorized Distributor

Click to View Pricing, Inventory, Delivery & Lifecycle Information:

Cosel:

N-PBA15-J/T F-PBA100-2 N-PBA10-J/T N-PBA50 F-PBA50-2 N-PBA75-J/T F-PBA30-1 F-PPBA30-1 N-PBA10 F-PPBA100-1 F-PBA75-1 F-PBA150-2 F-PBA10-1 N-PBA50-J/T N-PBA15 N-PBA100 F-PBA30-2 N-PBA30 N-PBA100-J/T N-PBA30-J/T N-PBA75 F-PBA75-2 F-PBA15-1 N-PBA150 F-PPBA75-1 F-PBA15-2 F-PBA100-1 F-PPBA50-1 F-PBA10-2 F-PBA150-1 F-PPBA15-1 F-PBA50-1 N-PBA150-J/T PBA100F-5-T PBA100F-5-C PBA30F-24-JVN PBA100F-3R3-CMN PBA100F-15-TN PBA100F-36-GJ PBA30F-9-JN PBA30F-48 PBA75F-5-T PBA75F-15-RVN PBA15F-3R3-N PBA75F-3R3-EN PBA75F-24-J PBA75F-48-CT PBA150F-24-RN1 PBA50F-15-GN PBA50F-36-R PBA150F-15-RN PBA10F-24-EN PBA150F-5-CEN PBA150F-12-CN PBA15F-5 PBA50F-12-R PBA50F-5-E PBA75F-12-CR PBA75F-12-RV PBA50F-24-JR PBA150F-36-N1 PBA15F-5-TN PBA100F-3R3-T PBA100F-12-RT PBA150F-15-CN1 PBA50F-24-CEN PBA30F-48-J PBA10F-5-N PBA100F-9-T PBA100F-12-TN PBA150F-48-D40N PBA150F-48-RT PBA30F-24-CT PBA15F-3R3-E PBA150F-24-C PBA15F-48-GN PBA150F-24-CTN PBA150F-5-T PBA75F-15-CRN PBA150F-5-VN PBA100F-36-GTN PBA100F-12-CN1 PBA50F-15 PBA100F-24-R PBA150F-24-GTN PBA10F-24-J PBA50F-9-TN PBA30F-5-GN PBA50F-48-R PBA75F-36-C PBA30F-12-V PBA50F-5-R PBA150F-3R3-T PBA150F-24-JN1 PBA30F-3R3-CN PBA75F-36-T PBA150F-3R3-GR PBA150F-24-E PBA100F-24-CN1 PBA100F-24-RT

Компания «ЭлектроПласт» предлагает заключение долгосрочных отношений при поставках импортных электронных компонентов на взаимовыгодных условиях!

Наши преимущества:

- Оперативные поставки широкого спектра электронных компонентов отечественного и импортного производства напрямую от производителей и с крупнейших мировых складов;
- Поставка более 17-ти миллионов наименований электронных компонентов;
- Поставка сложных, дефицитных, либо снятых с производства позиций;
- Оперативные сроки поставки под заказ (от 5 рабочих дней);
- Экспресс доставка в любую точку России;
- Техническая поддержка проекта, помощь в подборе аналогов, поставка прототипов;
- Система менеджмента качества сертифицирована по Международному стандарту ISO 9001;
- Лицензия ФСБ на осуществление работ с использованием сведений, составляющих государственную тайну;
- Поставка специализированных компонентов (Xilinx, Altera, Analog Devices, Intersil, Interpoint, Microsemi, Aeroflex, Peregrine, Syfer, Eurofarad, Texas Instrument, Miteq, Cobham, E2V, MA-COM, Hittite, Mini-Circuits,General Dynamics и др.);

Помимо этого, одним из направлений компании «ЭлектроПласт» является направление «Источники питания». Мы предлагаем Вам помощь Конструкторского отдела:

- Подбор оптимального решения, техническое обоснование при выборе компонента;
- Подбор аналогов;
- Консультации по применению компонента;
- Поставка образцов и прототипов;
- Техническая поддержка проекта;
- Защита от снятия компонента с производства.

Как с нами связаться

Телефон: 8 (812) 309 58 32 (многоканальный)
Факс: 8 (812) 320-02-42
Электронная почта: org@eplast1.ru
Адрес: 198099, г. Санкт-Петербург, ул. Калинина, дом 2, корпус 4, литера А.