COSEL AC-DC Power Supplies Enclosed type

# PBA10F

## Ordering information

| PB | A | 10 | F | -□ | -□ |
|---|---|---|---|---|---|
| ① | ② | ③ | ④ | ⑤ | ⑥ |

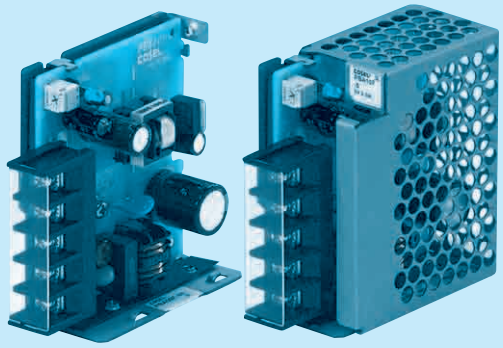

Cover is optional

**Recommended EMI/EMC Filter**
**NAC-06-472**

High voltage pulse noise type : NAP series
Low leakage current type : NAM series
＊The EMI/EMC Filter is recommended to connect with several devices.

①Series name
②Single output
③Output wattage
④Universal input
⑤Output voltage
⑥Optional ＊5
C :with Coating
G :Low leakage current
E :Low leakage current and EMI class A
T :Vertical terminal block
J :Connector type
N :with Cover (UL508 is acquired)
N1 :with DIN rail and Cover
V :Output voltage setting potentiometer externally

| MODEL | PBA10F-5 | PBA10F-12 | PBA10F-24 |
|---|---|---|---|
| MAX OUTPUT WATTAGE[W] | 10 | 10.8 | 12 |
| DC OUTPUT | 5V 2A | 12V 0.9A | 24V 0.5A |

## SPECIFICATIONS

| | MODEL | | PBA10F-5 | PBA10F-12 | PBA10F-24 |
|---|---|---|---|---|---|
| INPUT | VOLTAGE[V] | | AC85 - 264 1φ or DC110 - 370 (AC50 or DC70 Please refer to the instruction manual 2.1 Input voltage ＊3) | | |
| | CURRENT[A] | ACIN 100V | 0.30typ (Io=100%) | | |
| | | ACIN 200V | 0.20typ (Io=100%) | | |
| | FREQUENCY[Hz] | | 50/60 (47 - 440) or DC | | |
| | EFFICIENCY[%] | ACIN 100V | 74typ | 76typ | 77typ |
| | | ACIN 200V | 74typ | 76typ | 77typ |
| | INRUSH CURRENT[A] | ACIN 100V | 15typ (Io=100%) | | |
| | | ACIN 200V | 30typ (Io=100%) | | |
| | LEAKAGE CURRENT[mA] | | 0.15/0.30max (ACIN 100V/240V 60Hz, Io=100%, According to IEC60950-1,DENAN) | | |
| OUTPUT | VOLTAGE[V] | | 5 | 12 | 24 |
| | CURRENT[A] | | 2 | 0.9 | 0.5 |
| | LINE REGULATION[mV] ＊6 | | 20max | 48max | 96max |
| | LOAD REGULATION[mV] ＊6 | | 40max | 100max | 150max |
| | RIPPLE[mVp-p] | 0 to +50℃ ＊1 | 80max | 120max | 120max |
| | | -10 - 0℃ ＊1 | 140max | 160max | 160max |
| | RIPPLE NOISE[mVp-p] | 0 to +50℃ ＊1 | 120max | 150max | 150max |
| | | -10 - 0℃ ＊1 | 160max | 180max | 180max |
| | TEMPERATURE REGULATION[mV] | 0 to +50℃ | 50max | 120max | 240max |
| | | -10 to +50℃ | 60max | 150max | 290max |
| | DRIFT[mV] ＊2 | | 20max | 48max | 96max |
| | START-UP TIME[ms] | | 200typ(ACIN 100V, Io=100%) ＊Start-up time is 700ms typ for less than 1minute of applying input again from turning off the input voltage. | | |
| | HOLD-UP TIME[ms] | | 20typ (ACIN 100V, Io=100%) | | |
| | OUTPUT VOLTAGE ADJUSTMENT RANGE[V] | | 4.50 - 5.50 | 10.0 - 13.2 | 19.2 - 27.0 |
| | OUTPUT VOLTAGE SETTING[V] | | 5.00 - 5.15 | 12.00 - 12.48 | 24.00 - 24.96 |
| PROTECTION CIRCUIT AND OTHERS | OVERCURRENT PROTECTION | | Works over 105% of rated current and recovers automatically | | |
| | OVERVOLTAGE PROTECTION[V] | | 5.75 - 7.00 | 15.0 - 18.0 | 30.0 - 37.0 |
| | OPERATING INDICATION | | LED (Green) | | |
| | REMOTE ON/OFF | | None | | |
| ISOLATION | INPUT-OUTPUT | | AC3,000V 1minute, Cutoff current = 10mA, DC500V 50MΩmin (At Room Temperature) | | |
| | INPUT-FG | | AC2,000V 1minute, Cutoff current = 10mA, DC500V 50MΩmin (At Room Temperature) | | |
| | OUTPUT-FG | | AC500V 1minute, Cutoff current = 25mA, DC500V 50MΩmin (At Room Temperature) | | |
| ENVIRONMENT | OPERATING TEMP.,HUMID.AND ALTITUDE | | -10 to +71℃ (Required Derating), 20 - 90%RH (Non condensing) 3,000m (10,000feet) max | | |
| | STORAGE TEMP.,HUMID.AND ALTITUDE | | -20 to +75℃, 20 - 90%RH (Non condensing) 9,000m (30,000feet) max | | |
| | VIBRATION | | 10 - 55Hz, 19.6m/s² (2G), 3minutes period, 60minutes each along X, Y and Z axis | | |
| | IMPACT | | 196.1m/s² (20G), 11ms, once each X, Y and Z axis | | |
| SAFETY AND NOISE REGULATIONS | AGENCY APPROVALS (At only AC input) | | UL60950-1, C-UL(CSA60950-1), EN60950-1, EN50178 Complies with DEN-AN | | |
| | CONDUCTED NOISE | | Complies with FCC Part15 classB, VCCI-B, CISPR22-B, EN55011-B, EN55022-B | | |
| | HARMONIC ATTENUATOR | | Complies with IEC61000-3-2 (Not built-in to active filter ＊4) ＊7 | | |
| OTHERS | CASE SIZE/WEIGHT | | 31×78×68mm [1.22×3.07×2.68 inches] (without terminal block) (W×H×D) / 150g max (with cover : 180g max) | | |
| | COOLING METHOD | | Convection | | |

＊1 Measured by 20MHz oscilloscope or Ripple-Noise meter(equivalent to KEISOKU-GIKEN :RM101).
＊2 Drift is the change in DC output for an eight hour period after a half-hour warm-up at 25℃.
＊3 Derating is required.
＊4 When two or more units are used,they may not comply with the harmonic attenuator. Please contact us for details.
＊5 Please contact us about safety approvals for the model with option.
＊6 Please contact us about dynamic load and input response.
＊7 Please contact us about class C.
＊ Parallel operation with other model is not possible.
＊ Derating is required when operated with cover.
＊ A sound may occur from power supply at peak loading.

## Block diagram

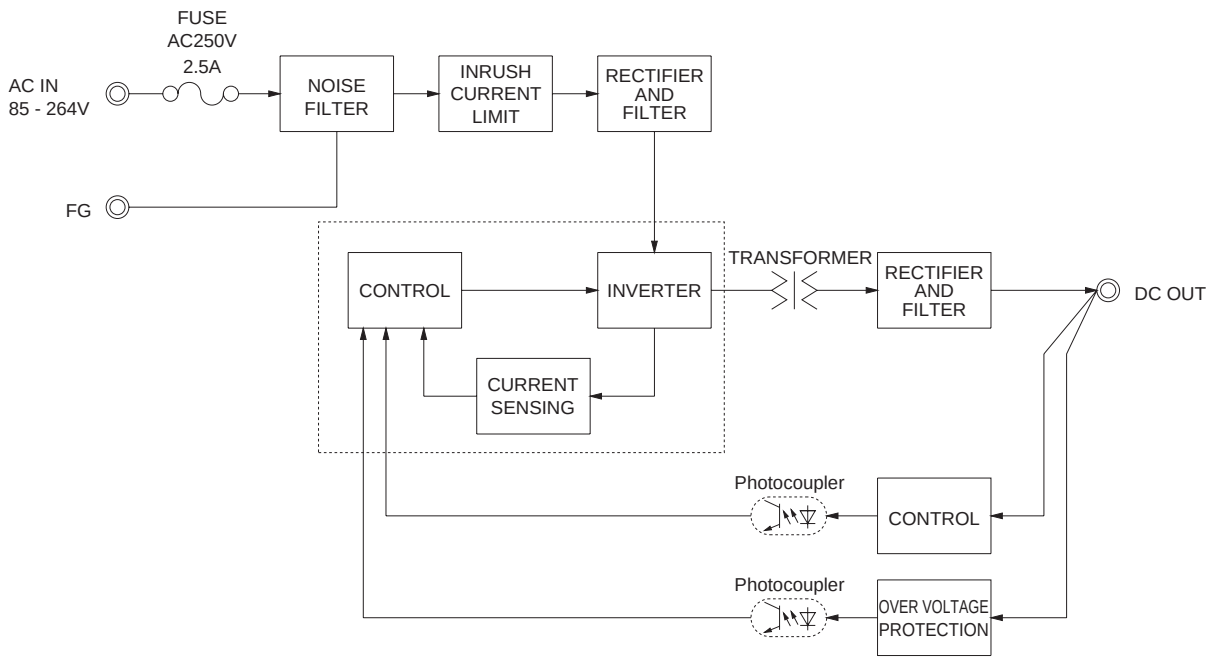


## External view

※ External size of option T,J,N,N1 and V is different from standard model and refer to 7 Option of instruction manual for details.

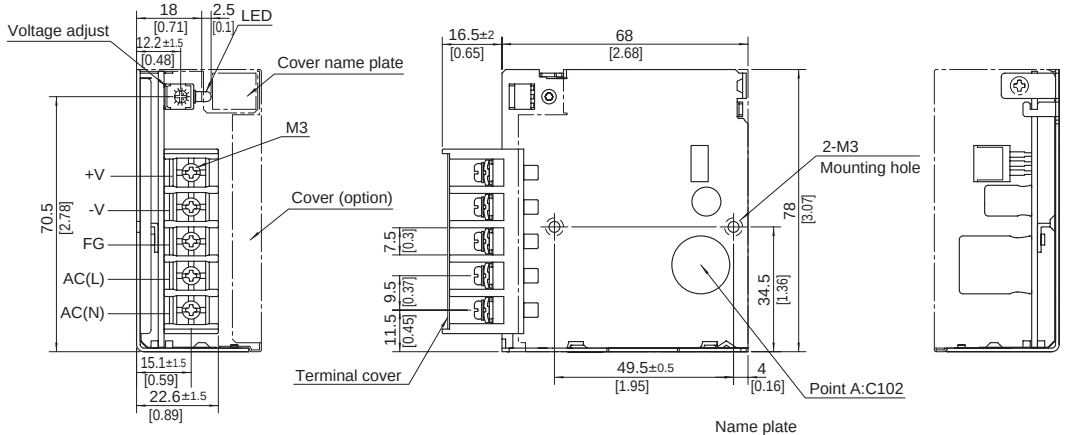


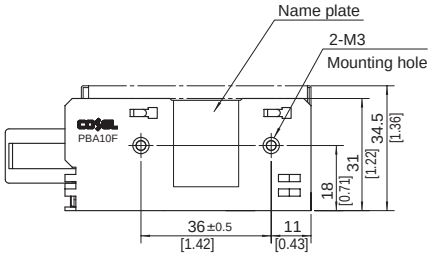


※ Tolerance : ±1 [±0.04]
※ Weight : 150g max (with cover : 180g max)
※ PCB Material/thickness : CEM3 / 1.6mm [0.06]
※ Chassis material : Electric galvanizing steel board
※ Dimensions in mm, [ ]= inches
※ Mounting torque : 0.6N • m(6.3kgf • cm)max
※ Screw tightening torque : M3 0.8N • m(8.5kgf • cm)max
※ Please connect safety ground to the unit in 2-M3 holes.

COSEL AC-DC Power Supplies Enclosed type

# PBA15F

## Ordering information

| PB | A | 15 | F | -□ | -□ |
|---|---|---|---|---|---|
| ① | ② | ③ | ④ | ⑤ | ⑥ |

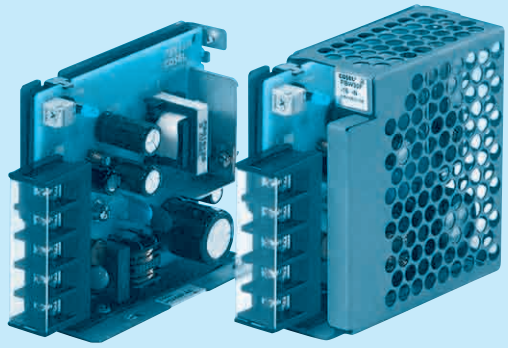

Cover is optional

**Recommended EMI/EMC Filter NAC-06-472**

High voltage pulse noise type : NAP series
Low leakage current type : NAM series
＊The EMI/EMC Filter is recommended to connect with several devices.

①Series name
②Single output
③Output wattage
④Universal input
⑤Output voltage
⑥Optional ＊5
C :with Coating
G :Low leakage current
E :Low leakage current and EMI class A
T :Vertical terminal block
J :Connector type
N :with Cover (UL508 is acquired [5V, 12V, 24V])
N1 :with DIN rail and Cover
V :Output voltage setting potentiometer externally

| MODEL | PBA15F-3R3 | PBA15F-5 | PBA15F-9 | PBA15F-12 | PBA15F-15 | PBA15F-24 | PBA15F-48 |
|---|---|---|---|---|---|---|---|
| MAX OUTPUT WATTAGE[W] | 9.9 | 15 | 15.3 | 15.6 | 15 | 16.8 | 16.8 |
| DC OUTPUT | 3.3V 3A | 5V 3A | 9V 1.7A | 12V 1.3A | 15V 1A | 24V 0.7A | 48V 0.35A |

## SPECIFICATIONS

| | MODEL | | PBA15F-3R3 | PBA15F-5 | PBA15F-9 | PBA15F-12 | PBA15F-15 | PBA15F-24 | PBA15F-48 |
|---|---|---|---|---|---|---|---|---|---|
| INPUT | VOLTAGE[V] | | AC85 - 264 1φ or DC110 - 370 (AC50 or DC70 Please refer to the instruction manual 2.1 Input voltage ＊3) | | | | | | |
| | CURRENT[A] | ACIN 100V | 0.30typ (Io=100%) | 0.4typ (Io=100%) | | | | | |
| | | ACIN 200V | 0.15typ (Io=100%) | 0.2typ (Io=100%) | | | | | |
| | FREQUENCY[Hz] | | 50/60 (47 - 440) or DC | | | | | | |
| | EFFICIENCY[%] | ACIN 100V | 68typ | 74typ | 75typ | 75typ | 77typ | 75typ | 75typ |
| | | ACIN 200V | 68typ | 75typ | 77typ | 78typ | 80typ | 78typ | 78typ |
| | INRUSH CURRENT[A] | ACIN 100V | 15typ (Io=100%) (At cold start) | | | | | | |
| | | ACIN 200V | 30typ (Io=100%) (At cold start) | | | | | | |
| | LEAKAGE CURRENT[mA] | | 0.15/0.30max (ACIN 100V/240V 60Hz, Io=100%, According to IEC60950-1,DENAN) | | | | | | |
| OUTPUT | VOLTAGE[V] | | 3.3 | 5 | 9 | 12 | 15 | 24 | 48 |
| | CURRENT[A] | | 3 | 3 | 1.7 | 1.3 | 1 | 0.7 | 0.35 |
| | LINE REGULATION[mV] ＊6 | | 20max | 20max | 36max | 48max | 60max | 96max | 192max |
| | LOAD REGULATION[mV] ＊6 | | 40max | 40max | 100max | 100max | 120max | 150max | 240max |
| | RIPPLE[mVp-p] | 0 to +50℃ ＊1 | 80max | 80max | 120max | 120max | 120max | 120max | 150max |
| | | -10 - 0℃ ＊1 | 140max | 140max | 160max | 160max | 160max | 160max | 200max |
| | RIPPLE NOISE[mVp-p] | 0 to +50℃ ＊1 | 120max | 120max | 150max | 150max | 150max | 150max | 250max |
| | | -10 - 0℃ ＊1 | 160max | 160max | 180max | 180max | 180max | 180max | 300max |
| | TEMPERATURE REGULATION[mV] | 0 to +50℃ | 50max | 50max | 90max | 120max | 150max | 240max | 480max |
| | | -10 to +50℃ | 60max | 60max | 120max | 150max | 180max | 290max | 600max |
| | DRIFT[mV] ＊2 | | 20max | 20max | 36max | 48max | 60max | 96max | 192max |
| | START-UP TIME[ms] | | 200typ(ACIN 100V, Io=100%) ＊Start-up time is 700ms typ for less than 1minute of applying input again from turning off the input voltage. | | | | | | |
| | HOLD-UP TIME[ms] | | 20typ (ACIN 100V, Io=100%) | | | | | | |
| | OUTPUT VOLTAGE ADJUSTMENT RANGE[V] | | 2.85 - 3.60 | 4.50 - 5.50 | 7.50 - 10.0 | 10.0 - 13.2 | 13.2 - 18.0 | 19.2 - 27.0 | 39.0 - 53.0 |
| | OUTPUT VOLTAGE SETTING[V] | | 3.30 - 3.40 | 5.00 - 5.15 | 9.00 - 9.36 | 12.00 - 12.48 | 15.00 - 15.60 | 24.00 - 24.96 | 48.00 - 49.92 |
| PROTECTION CIRCUIT AND OTHERS | OVERCURRENT PROTECTION | | Works over 105% of rated current and recovers automatically | | | | | | |
| | OVERVOLTAGE PROTECTION[V] | | 4.00 - 5.25 | 5.75 - 7.00 | 11.5 - 14.0 | 15.0 - 18.0 | 20.0 - 25.0 | 30.0 - 37.0 | 58.0 - 65.0 |
| | OPERATING INDICATION | | LED (Green) | | | | | | |
| | REMOTE ON/OFF | | None | | | | | | |
| ISOLATION | INPUT-OUTPUT | | AC3,000V 1minute, Cutoff current = 10mA, DC500V 50MΩmin (At Room Temperature) | | | | | | |
| | INPUT-FG | | AC2,000V 1minute, Cutoff current = 10mA, DC500V 50MΩmin (At Room Temperature) | | | | | | |
| | OUTPUT-FG | | AC500V 1minute, Cutoff current = 25mA, DC500V 50MΩmin (At Room Temperature) | | | | | | |
| ENVIRONMENT | OPERATING TEMP.,HUMID.AND ALTITUDE | | -10 to +71℃ (Required Derating), 20 - 90%RH (Non condensing) 3,000m (10,000feet) max | | | | | | |
| | STORAGE TEMP.,HUMID.AND ALTITUDE | | -20 to +75℃, 20 - 90%RH (Non condensing) 9,000m (30,000feet) max | | | | | | |
| | VIBRATION | | 10 - 55Hz, 19.6m/s² (2G), 3minutes period, 60minutes each along X, Y and Z axis | | | | | | |
| | IMPACT | | 196.1m/s² (20G), 11ms, once each X, Y and Z axis | | | | | | |
| SAFETY AND NOISE REGULATIONS | AGENCY APPROVALS (At only AC input) | | UL60950-1, C-UL(CSA60950-1), EN60950-1, EN50178 Complies with DEN-AN | | | | | | |
| | CONDUCTED NOISE | | Complies with FCC Part15 classB, VCCI-B, CISPR22-B, EN55011-B, EN55022-B | | | | | | |
| | HARMONIC ATTENUATOR | | Complies with IEC61000-3-2 (Not built-in to active filter ＊4) ＊7 | | | | | | |
| OTHERS | CASE SIZE/WEIGHT | | 31×78×85mm [1.22×3.07×3.35 inches] (without terminal block) (W×H×D) / 200g max (with cover : 235g max) | | | | | | |
| | COOLING METHOD | | Convection | | | | | | |

＊1 Measured by 20MHz oscilloscope or Ripple-Noise meter(equivalent to KEISOKU-GIKEN :RM101).
＊2 Drift is the change in DC output for an eight hour period after a half-hour warm-up at 25℃.
＊3 Derating is required.
＊4 When two or more units are used,they may not comply with the harmonic attenuator. Please contact us for details.
＊5 Please contact us about safety approvals for the model with option.
＊6 Please contact us about dynamic load and input response.
＊7 Please contact us about class C.
＊ Parallel operation with other model is not possible.
＊ Derating is required when operated with cover.
＊ A sound may occur from power supply at peak loading.

## Block diagram

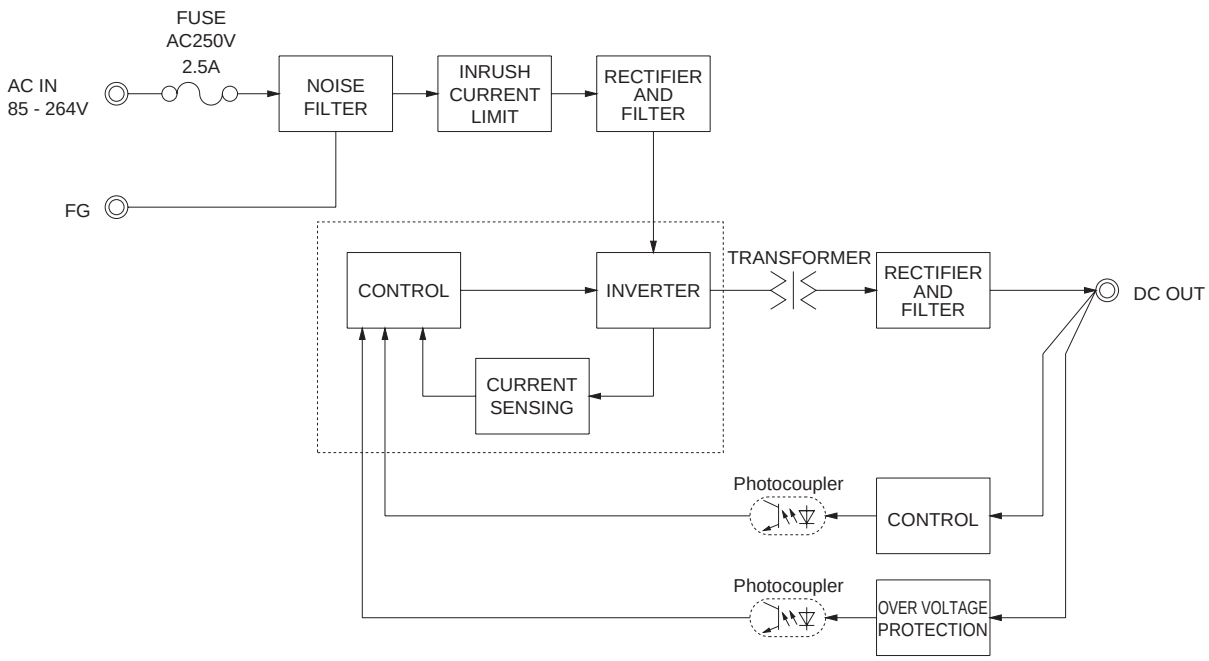


## External view

※ External size of option T,J,N,N1 and V is different from standard model and refer to 7 Option of instruction manual for details.

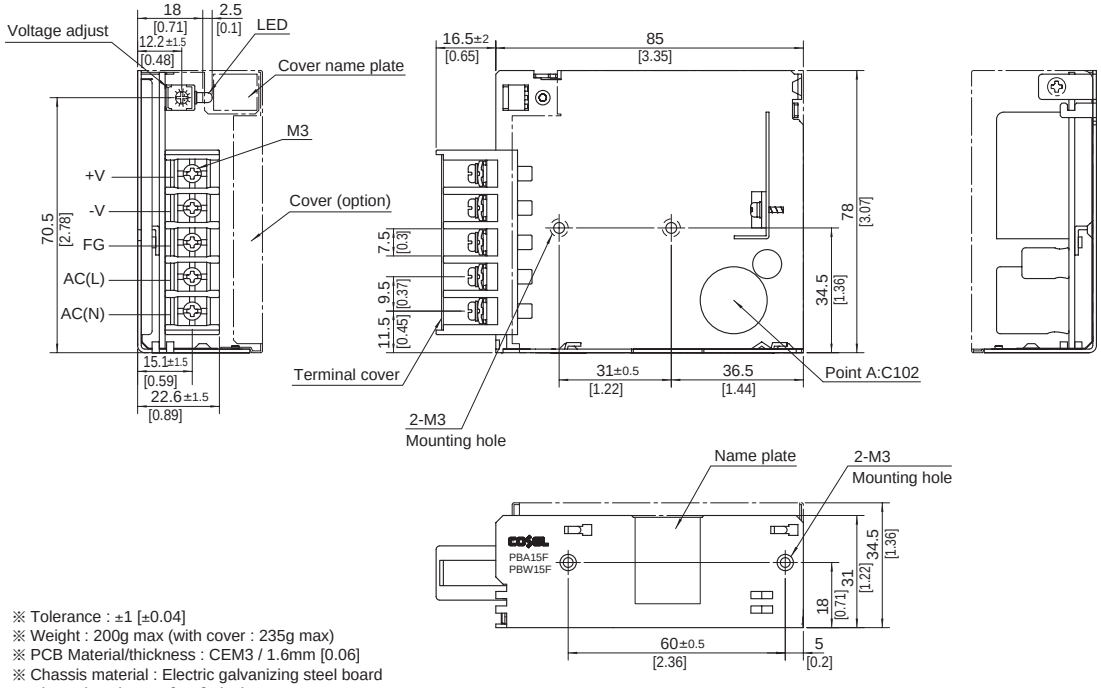


※ Tolerance : ±1 [±0.04]
※ Weight : 200g max (with cover : 235g max)
※ PCB Material/thickness : CEM3 / 1.6mm [0.06]
※ Chassis material : Electric galvanizing steel board
※ Dimensions in mm, [ ]= inches
※ Mounting torque : 0.6N • m(6.3kgf • cm)max
※ Screw tightening torque : M3 0.8N • m(8.5kgf • cm)max
※ Please connect safety ground to the unit in 2-M3 holes.

COSEL AC-DC Power Supplies Enclosed type

# PBA30F

## Ordering information

| PB | A | 30 | F | -□ | -□ |
|---|---|---|---|---|---|
| ① | ② | ③ | ④ | ⑤ | ⑥ |

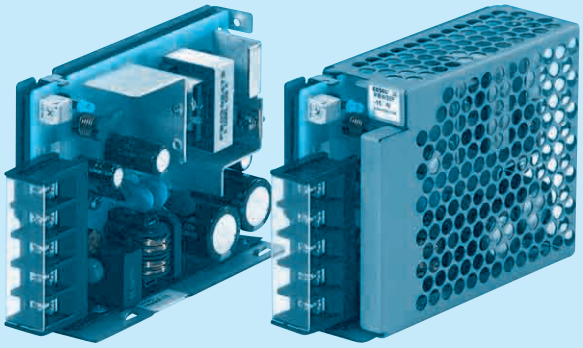

Cover is optional

**Recommended EMI/EMC Filter NAC-06-472**

High voltage pulse noise type : NAP series
Low leakage current type : NAM series
＊The EMI/EMC Filter is recommended to connect with several devices.

①Series name
②Single output
③Output wattage
④Universal input
⑤Output voltage
⑥Optional ＊5
C :with Coating
G :Low leakage current
E :Low leakage current and EMI class A
T :Vertical terminal block
J :Connector type
N :with Cover (UL508 is acquired [5V, 12V, 24V])
N1 :with DIN rail and Cover
V :Output voltage setting potentiometer externally

| MODEL | PBA30F-3R3 | PBA30F-5 | PBA30F-9 | PBA30F-12 | PBA30F-15 | PBA30F-24 | PBA30F-48 |
|---|---|---|---|---|---|---|---|
| MAX OUTPUT WATTAGE[W] | 19.8 | 30 | 30.6 | 30 | 30 | 31.2 | 31.2 |
| DC OUTPUT | 3.3V 6A | 5V 6A | 9V 3.4A | 12V 2.5A | 15V 2A | 24V 1.3A | 48V 0.65A |

## SPECIFICATIONS

| | MODEL | | PBA30F-3R3 | PBA30F-5 | PBA30F-9 | PBA30F-12 | PBA30F-15 | PBA30F-24 | PBA30F-48 |
|---|---|---|---|---|---|---|---|---|---|
| INPUT | VOLTAGE[V] | | AC85 - 264 1φ or DC110 - 370 (AC50 or DC70 Please refer to the instruction manual 2.1 Input voltage ＊3) | | | | | | |
| | CURRENT[A] | ACIN 100V | 0.50typ (Io=100%) | 0.70typ (Io=100%) | | | | | |
| | | ACIN 200V | 0.30typ (Io=100%) | 0.40typ (Io=100%) | | | | | |
| | FREQUENCY[Hz] | | 50/60 (47 - 440) or DC | | | | | | |
| | EFFICIENCY[%] | ACIN 100V | 68typ | 74typ | 75typ | 76typ | 78typ | 78typ | 79typ |
| | | ACIN 200V | 69typ | 77typ | 77typ | 78typ | 81typ | 81typ | 81typ |
| | INRUSH CURRENT[A] | ACIN 100V | 15typ (Io=100%) (At cold start) | | | | | | |
| | | ACIN 200V | 30typ (Io=100%) (At cold start) | | | | | | |
| | LEAKAGE CURRENT[mA] | | 0.30/0.65max (ACIN 100V/240V 60Hz, Io=100%, According to IEC60950-1,DENAN) | | | | | | |
| OUTPUT | VOLTAGE[V] | | 3.3 | 5 | 9 | 12 | 15 | 24 | 48 |
| | CURRENT[A] | | 6 | 6 | 3.4 | 2.5 | 2 | 1.3 | 0.65 |
| | LINE REGULATION[mV] | ＊6 | 20max | 20max | 36max | 48max | 60max | 96max | 192max |
| | LOAD REGULATION[mV] | ＊6 | 40max | 40max | 100max | 100max | 120max | 150max | 240max |
| | RIPPLE[mVp-p] | 0 to +50℃ ＊1 | 80max | 80max | 120max | 120max | 120max | 120max | 150max |
| | | -10 - 0℃ ＊1 | 140max | 140max | 160max | 160max | 160max | 160max | 200max |
| | RIPPLE NOISE[mVp-p] | 0 to +50℃ ＊1 | 120max | 120max | 150max | 150max | 150max | 150max | 250max |
| | | -10 - 0℃ ＊1 | 160max | 160max | 180max | 180max | 180max | 180max | 300max |
| | TEMPERATURE REGULATION[mV] | 0 to +50℃ | 50max | 50max | 90max | 120max | 150max | 240max | 480max |
| | | -10 to +50℃ | 60max | 60max | 120max | 150max | 180max | 290max | 600max |
| | DRIFT[mV] | ＊2 | 20max | 20max | 36max | 48max | 60max | 96max | 192max |
| | START-UP TIME[ms] | | 200typ(ACIN 100V, Io=100%) ＊Start-up time is 700ms typ for less than 1minute of applying input again from turning off the input voltage. | | | | | | |
| | HOLD-UP TIME[ms] | | 20typ (ACIN 100V, Io=100%) | | | | | | |
| | OUTPUT VOLTAGE ADJUSTMENT RANGE[V] | | 2.85 - 3.60 | 4.50 - 5.50 | 7.50 - 10.0 | 10.0 - 13.2 | 13.2 - 18.0 | 19.2 - 27.0 | 39.0 - 53.0 |
| | OUTPUT VOLTAGE SETTING[V] | | 3.30 - 3.40 | 5.00 - 5.15 | 9.00 - 9.36 | 12.00 - 12.48 | 15.00 - 15.60 | 24.00 - 24.96 | 48.00 - 49.92 |
| PROTECTION CIRCUIT AND OTHERS | OVERCURRENT PROTECTION | | Works over 105% of rated current and recovers automatically | | | | | | |
| | OVERVOLTAGE PROTECTION[V] | | 4.00 - 5.25 | 5.75 - 7.00 | 11.5 - 14.0 | 15.0 - 18.0 | 20.0 - 25.0 | 30.0 - 37.0 | 58.0 - 65.0 |
| | OPERATING INDICATION | | LED (Green) | | | | | | |
| | REMOTE ON/OFF | | None | | | | | | |
| ISOLATION | INPUT-OUTPUT | | AC3,000V 1minute, Cutoff current = 10mA, DC500V 50MΩmin (At Room Temperature) | | | | | | |
| | INPUT-FG | | AC2,000V 1minute, Cutoff current = 10mA, DC500V 50MΩmin (At Room Temperature) | | | | | | |
| | OUTPUT-FG | | AC500V 1minute, Cutoff current = 25mA, DC500V 50MΩmin (At Room Temperature) | | | | | | |
| ENVIRONMENT | OPERATING TEMP.,HUMID.AND ALTITUDE | | -10 to +71℃ (Required Derating), 20 - 90%RH (Non condensing) 3,000m (10,000feet) max | | | | | | |
| | STORAGE TEMP.,HUMID.AND ALTITUDE | | -20 to +75℃, 20 - 90%RH (Non condensing) 9,000m (30,000feet) max | | | | | | |
| | VIBRATION | | 10 - 55Hz, 19.6m/s² (2G), 3minutes period, 60minutes each along X, Y and Z axis | | | | | | |
| | IMPACT | | 196.1m/s² (20G), 11ms, once each X, Y and Z axis | | | | | | |
| SAFETY AND NOISE REGULATIONS | AGENCY APPROVALS (At only AC input) | | UL60950-1, C-UL(CSA60950-1), EN60950-1, EN50178 Complies with DEN-AN | | | | | | |
| | CONDUCTED NOISE | | Complies with FCC Part15 classB, VCCI-B, CISPR22-B, EN55011-B, EN55022-B | | | | | | |
| | HARMONIC ATTENUATOR | | Complies with IEC61000-3-2 (Not built-in to active filter ＊4) ＊7 | | | | | | |
| OTHERS | CASE SIZE/WEIGHT | | 31×78×103mm [1.22×3.07×4.06 inches] (without terminal block) (W×H×D) / 270g max (with cover : 310g max) | | | | | | |
| | COOLING METHOD | | Convection | | | | | | |

＊1 Measured by 20MHz oscilloscope or Ripple-Noise meter(equivalent to KEISOKU-GIKEN :RM101).
＊2 Drift is the change in DC output for an eight hour period after a half-hour warm-up at 25℃.
＊3 Derating is required.
＊4 When two or more units are used,they may not comply with the harmonic attenuator. Please contact us for details.
＊5 Please contact us about safety approvals for the model with option.
＊6 Please contact us about dynamic load and input response.
＊7 Please contact us about class C.
＊ Parallel operation with other model is not possible.
＊ Derating is required when operated with cover.
＊ A sound may occur from power supply at peak loading.

## Block diagram

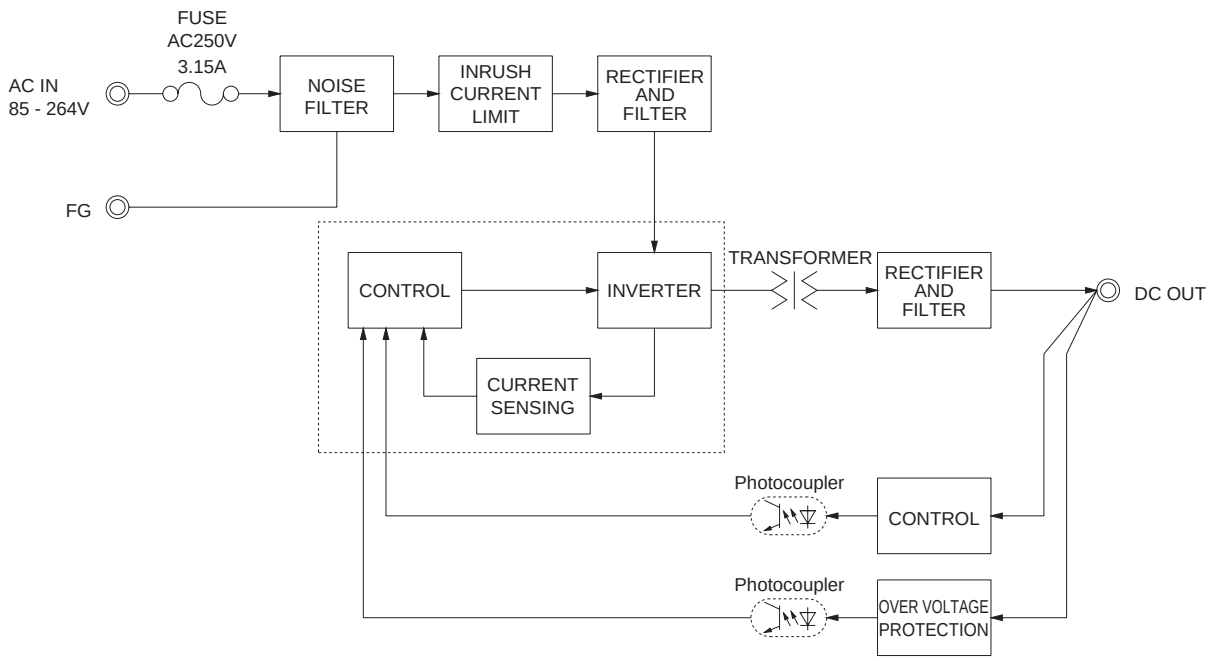


## External view

※ External size of option T,J,N,N1 and V is different from standard model and refer to 7 Option of instruction manual for details.

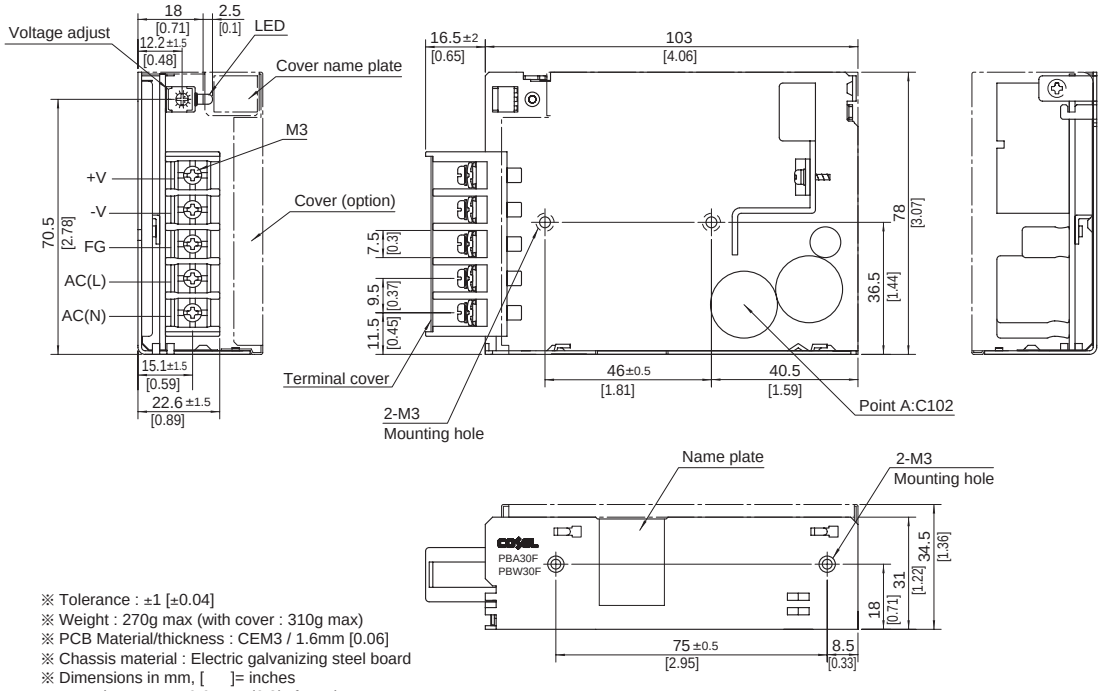


※ Tolerance : ±1 [±0.04]
※ Weight : 270g max (with cover : 310g max)
※ PCB Material/thickness : CEM3 / 1.6mm [0.06]
※ Chassis material : Electric galvanizing steel board
※ Dimensions in mm, [ ]= inches
※ Mounting torque : 0.6N • m(6.3kgf • cm)max
※ Screw tightening torque : M3 0.8N • m(8.5kgf • cm)max
※ Please connect safety ground to the unit in 2-M3 holes.

COSEL AC-DC Power Supplies Enclosed type

# PBA50F

## Ordering information

| PB | A | 50 | F | -5 | -□ |
|---|---|---|---|---|---|
| ① | ② | ③ | ④ | ⑤ | ⑥ |

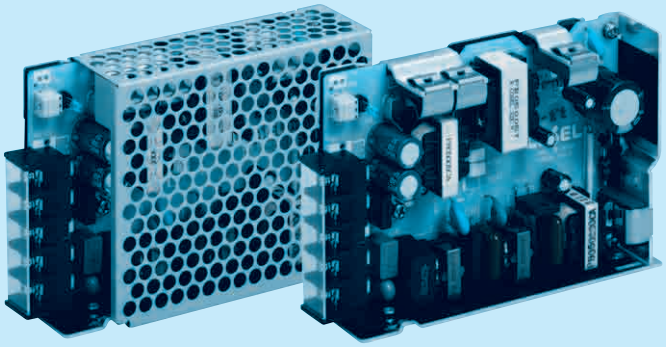

Cover is optional

**Recommended EMI/EMC Filter NAC-06-472**

High voltage pulse noise type : NAP series
Low leakage current type : NAM series
*The EMI/EMC Filter is recommended to connect with several devices.

①Series name
②Single output
③Output wattage
④Universal input
⑤Output voltage
⑥Optional *5
C :with Coating
G :Low leakage current (0.15mA max / ACIN 240V)
E :Low leakage current and EMI class A (0.5mA max / ACIN 240V)
T :Vertical terminal block
J :Connector type
R :with Remote ON/OFF
N :with Cover (Only 24V UL508 is acquired)
N1 :with DIN rail and Cover
V :Output voltage setting potentiometer externally

| MODEL | PBA50F-3R3 | PBA50F-5 | PBA50F-9 | PBA50F-12 | PBA50F-15 | PBA50F-24 | PBA50F-36 | PBA50F-48 |
|---|---|---|---|---|---|---|---|---|
| MAX OUTPUT WATTAGE[W] | 33 | 50 | 50.4 | 51.6 | 52.5 | 52.8 | 50.4 | 52.8 |
| DC OUTPUT | 3.3V 10A | 5V 10A | 9V 5.6A | 12V 4.3A | 15V 3.5A | 24V 2.2A | 36V 1.4A | 48V 1.1A |

## SPECIFICATIONS

| | MODEL | | PBA50F-3R3 | PBA50F-5 | PBA50F-9 | PBA50F-12 | PBA50F-15 | PBA50F-24 | PBA50F-36 | PBA50F-48 |
|---|---|---|---|---|---|---|---|---|---|---|
| INPUT | VOLTAGE[V] | | AC85 - 264 1φ or DC120 - 370 (AC50 or DC70 Please refer to the instruction manual 2.1 Input voltage *4) | | | | | | | |
| | CURRENT[A] | ACIN 100V | 0.5typ | 0.7typ | | | | | | |
| | | ACIN 200V | 0.3typ | 0.4typ | | | | | | |
| | FREQUENCY[Hz] | | 50/60 (47 - 63) | | | | | | | |
| | EFFICIENCY[%] | ACIN 100V | 75typ | 80typ | 79typ | 80typ | 81typ | 82typ | 83typ | 83typ |
| | | ACIN 200V | 76typ | 82typ | 81typ | 82typ | 83typ | 84typ | 85typ | 85typ |
| | POWER FACTOR(Io=100%) | ACIN 100V | 0.98typ | 0.99typ | | | | | | |
| | | ACIN 200V | 0.87typ | 0.93typ | | | | | | |
| | INRUSH CURRENT[A] | ACIN 100V | 15typ (Io=100%) (At cold start) | | | | | | | |
| | | ACIN 200V | 30typ (Io=100%) (At cold start) | | | | | | | |
| | LEAKAGE CURRENT[mA] | | 0.4/0.75max (ACIN 100V/240V 60Hz, Io=100%, According to IEC60950-1,DENAN) | | | | | | | |
| OUTPUT | VOLTAGE[V] | | 3.3 | 5 | 9 | 12 | 15 | 24 | 36 | 48 |
| | CURRENT[A] | | 10 | 10 | 5.6 | 4.3 | 3.5 | 2.2 | 1.4 | 1.1 |
| | LINE REGULATION[mV] | | 20max | 20max | 36max | 48max | 60max | 96max | 144max | 192max |
| | LOAD REGULATION[mV] | | 40max | 40max | 100max | 100max | 120max | 150max | 240max | 240max |
| | RIPPLE[mVp-p] | 0 to +50℃ *1 | 80max | 80max | 120max | 120max | 120max | 120max | 150max | 150max |
| | | -10 - 0℃ *1 | 140max | 140max | 160max | 160max | 160max | 160max | 200max | 200max |
| | RIPPLE NOISE[mVp-p] | 0 to +50℃ *1 | 120max | 120max | 150max | 150max | 150max | 150max | 250max | 250max |
| | | -10 - 0℃ *1 | 160max | 160max | 180max | 180max | 180max | 180max | 300max | 300max |
| | TEMPERATURE REGULATION[mV] | 0 to +50℃ | 50max | 50max | 90max | 120max | 150max | 240max | 360max | 480max |
| | | -10 to +50℃ | 60max | 60max | 120max | 150max | 180max | 290max | 450max | 600max |
| | DRIFT[mV] | *2 | 20max | 20max | 36max | 48max | 60max | 96max | 144max | 192max |
| | START-UP TIME[ms] | | 350typ(ACIN 100V, Io=100%) | | | | | | | |
| | HOLD-UP TIME[ms] | | 20typ (ACIN 100V, Io=100%) | | | | | | | |
| | OUTPUT VOLTAGE ADJUSTMENT RANGE[V] | | 2.85 - 3.63 | 4.00 - 5.50 | 7.50 - 10.0 | 10.0 - 13.2 | 13.2 - 18.0 | 19.2 - 27.0 | 28.8 - 39.6 | 39.0 - 53.0 |
| | OUTPUT VOLTAGE SETTING[V] | | 3.30 - 3.40 | 5.00 - 5.15 | 9.00 - 9.36 | 12.00 - 12.48 | 15.00 - 15.60 | 24.00 - 24.96 | 35.00 - 37.44 | 48.00 - 49.92 |
| PROTECTION CIRCUIT AND OTHERS | OVERCURRENT PROTECTION | | Works over 105% of rated current and recovers automatically | | | | | | | |
| | OVERVOLTAGE PROTECTION[V] | | 4.00 - 5.25 | 5.75 - 7.00 | 11.5 - 14.0 | 15.0 - 18.0 | 20.0 - 25.0 | 30.0 - 37.0 | 43.0 - 50.0 | 58.0 - 65.0 |
| | OPERATING INDICATION | | LED (Green) | | | | | | | |
| | REMOTE ON/OFF | | Optional (Required external power source) | | | | | | | |
| ISOLATION | INPUT-OUTPUT · RC | *3 | AC3,000V 1minute, Cutoff current = 10mA, DC500V 50MΩmin (At Room Temperature) | | | | | | | |
| | INPUT-FG | | AC2,000V 1minute, Cutoff current = 10mA, DC500V 50MΩmin (At Room Temperature) | | | | | | | |
| | OUTPUT · RC-FG | *3 | AC500V 1minute, Cutoff current = 100mA, DC500V 50MΩmin (At Room Temperature) | | | | | | | |
| ENVIRONMENT | OPERATING TEMP.,HUMID.AND ALTITUDE | | -10 to +71℃ (Required Derating), 20 - 90%RH (Non condensing) 3,000m (10,000feet) max | | | | | | | |
| | STORAGE TEMP.,HUMID.AND ALTITUDE | | -20 to +75℃, 20 - 90%RH (Non condensing) 9,000m (30,000feet) max | | | | | | | |
| | VIBRATION | | 10 - 55Hz, 19.6m/s² (2G), 3minutes period, 60minutes each along X, Y and Z axis | | | | | | | |
| | IMPACT | | 196.1m/s² (20G), 11ms, once each X, Y and Z axis | | | | | | | |
| SAFETY AND NOISE REGULATIONS | AGENCY APPROVALS (At only AC input) | | UL60950-1, C-UL(CSA60950-1), EN60950-1, EN50178 Complies with DEN-AN | | | | | | | |
| | CONDUCTED NOISE | | Complies with FCC Part15 classB, VCCI-B, CISPR22-B, EN55011-B, EN55022-B | | | | | | | |
| | HARMONIC ATTENUATOR | | Complies with IEC61000-3-2 *6 | | | | | | | |
| OTHERS | CASE SIZE/WEIGHT | | 31×82×120mm [1.22×3.23×4.72 inches] (without terminal block) (W×H×D) / 280g max (with cover : 325g max) | | | | | | | |
| | COOLING METHOD | | Convection | | | | | | | |

*1 Measured by 20MHz oscilloscope or Ripple-Noise meter(equivalent to KEISOKU-GIKEN :RM101).
*2 Drift is the change in DC output for an eight hour period after a half-hour warm-up at 25℃.
*3 Applicable when Remote ON/OFF(optional) is added. RC is insulated with input, output and FG.
*4 Derating is required.
*5 Please contact us about safety approvals for the model with option.
*6 Please contact us about class C.
* Parallel operation with other model is not possible.
* Derating is required when operated with cover.
* A sound may occur from power supply at peak loading.

## Block diagram

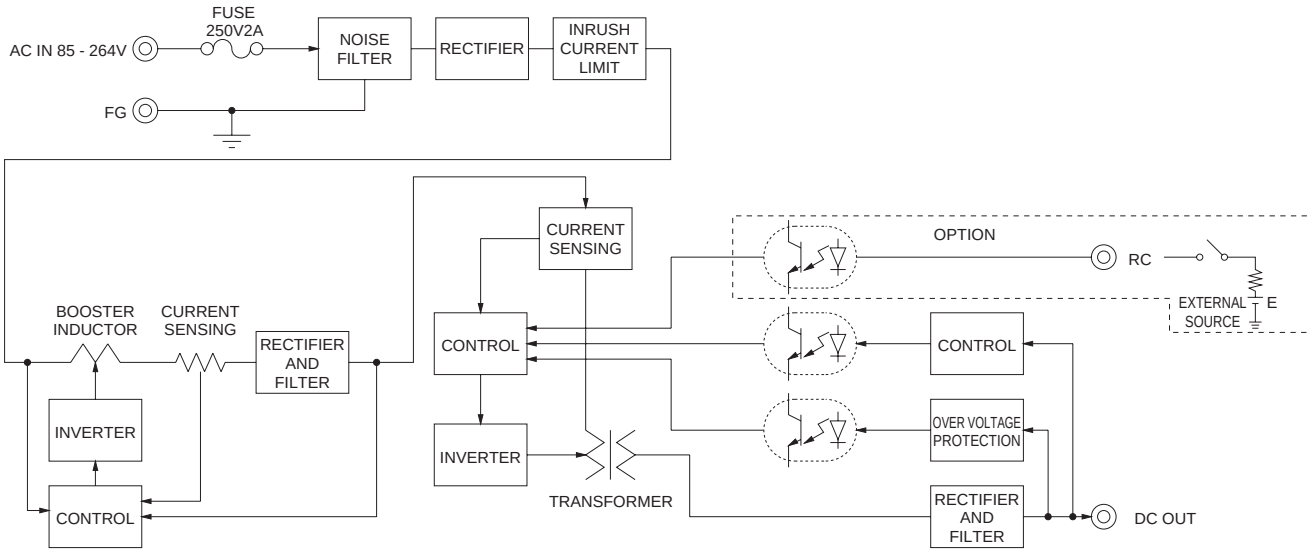


## External view

※ External size of option T,J,R,N,N1 and V is different from standard model and refer to 7 Option of instruction manual for details.

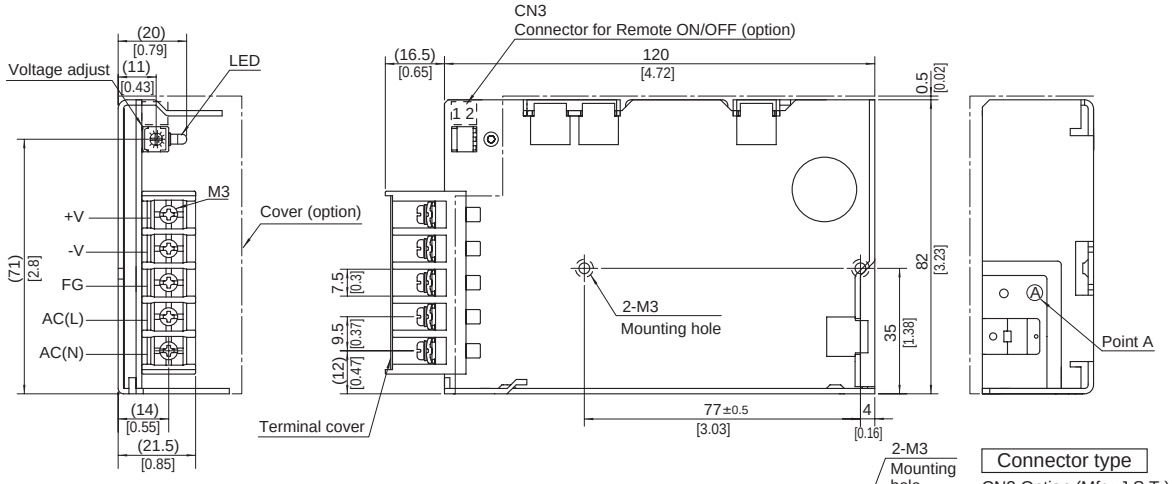


**Connector type**

CN3 Option (Mfr : J.S.T.)

| Pin No. | Contents |
|---|---|
| 1 | RC(+) |
| 2 | RC(-) |

**Barrier strip type**

Model B2B-XH-A
Mating Connector (Terminal)
XHP-2
(BXH-001T-P0.6 or SXH-001T-P0.6)

※ Tolerance : ±1 [±0.04]
※ Weight : 280g max (with cover : 325g max)
※ PCB Material/thickness : CEM3 / 1.6mm [0.06]
※ Chassis material : Aluminum
※ Dimensions in mm, [ ]= inches
※ Mounting torque : 0.49N • m(5kgf • cm)max
※ Screw tightening torque : M3 0.8N • m(8.5kgf • cm)max
※ Please connect safety ground to the unit in 2-M3 holes.

COSEL AC-DC Power Supplies Enclosed type

# PBA75F

## Ordering information

| PB | A | 75 | F | -5 | -□ |
|---|---|---|---|---|---|
| ① | ② | ③ | ④ | ⑤ | ⑥ |

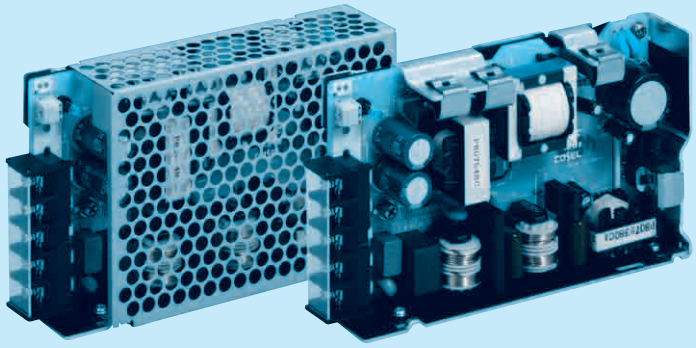

Cover is optional

**Recommended EMI/EMC Filter NAC-06-472**

High voltage pulse noise type : NAP series
Low leakage current type : NAM series
*The EMI/EMC Filter is recommended to connect with several devices.

①Series name
②Single output
③Output wattage
④Universal input
⑤Output voltage
⑥Optional *5
C :with Coating
G :Low leakage current (0.15mA max / ACIN 240V)
E :Low leakage current and EMI class A (0.5mA max / ACIN 240V)
T :Vertical terminal block
J :Connector type
R :with Remote ON/OFF
N :with Cover (Only 24V UL508 is acquired)
N1 :with DIN rail and Cover
V :Output voltage setting potentiometer externally

| MODEL | PBA75F-3R3 | PBA75F-5 | PBA75F-9 | PBA75F-12 | PBA75F-15 | PBA75F-24 | PBA75F-36 | PBA75F-48 |
|---|---|---|---|---|---|---|---|---|
| MAX OUTPUT WATTAGE[W] | 49.5 | 75 | 75.6 | 75.6 | 75 | 76.8 | 75.6 | 76.8 |
| DC OUTPUT | 3.3V 15A | 5V 15A | 9V 8.4A | 12V 6.3A | 15V 5A | 24V 3.2A | 36V 2.1A | 48V 1.6A |

## SPECIFICATIONS

| | MODEL | | PBA75F-3R3 | PBA75F-5 | PBA75F-9 | PBA75F-12 | PBA75F-15 | PBA75F-24 | PBA75F-36 | PBA75F-48 |
|---|---|---|---|---|---|---|---|---|---|---|
| INPUT | VOLTAGE[V] | | AC85 - 264 1φ or DC120 - 370 (AC50 or DC70 Please refer to the instruction manual 2.1 Input voltage *4) | | | | | | | |
| | CURRENT[A] | ACIN 100V | 0.7typ | 1.0typ | | | | | | |
| | | ACIN 200V | 0.4typ | 0.5typ | | | | | | |
| | FREQUENCY[Hz] | | 50/60 (47 - 63) | | | | | | | |
| | EFFICIENCY[%] | ACIN 100V | 77typ | 81typ | 80typ | 81typ | 82typ | 83typ | 84typ | 84typ |
| | | ACIN 200V | 78typ | 83typ | 82typ | 83typ | 84typ | 85typ | 86typ | 86typ |
| | POWER FACTOR(Io=100%) | ACIN 100V | 0.98typ | 0.99typ | | | | | | |
| | | ACIN 200V | 0.87typ | 0.93typ | | | | | | |
| | INRUSH CURRENT[A] | ACIN 100V | 15typ (Io=100%) (At cold start) | | | | | | | |
| | | ACIN 200V | 30typ (Io=100%) (At cold start) | | | | | | | |
| | LEAKAGE CURRENT[mA] | | 0.4/0.75max (ACIN 100V/240V 60Hz, Io=100%, According to IEC60950-1,DENAN) | | | | | | | |
| OUTPUT | VOLTAGE[V] | | 3.3 | 5 | 9 | 12 | 15 | 24 | 36 | 48 |
| | CURRENT[A] | | 15 | 15 | 8.4 | 6.3 | 5 | 3.2 | 2.1 | 1.6 |
| | LINE REGULATION[mV] | | 20max | 20max | 36max | 48max | 60max | 96max | 144max | 192max |
| | LOAD REGULATION[mV] | | 40max | 40max | 100max | 100max | 120max | 150max | 240max | 240max |
| | RIPPLE[mVp-p] | 0 to +50℃ *1 | 80max | 80max | 120max | 120max | 120max | 120max | 150max | 150max |
| | | -10 - 0℃ *1 | 140max | 140max | 160max | 160max | 160max | 160max | 200max | 200max |
| | RIPPLE NOISE[mVp-p] | 0 to +50℃ *1 | 120max | 120max | 150max | 150max | 150max | 150max | 250max | 250max |
| | | -10 - 0℃ *1 | 160max | 160max | 180max | 180max | 180max | 180max | 300max | 300max |
| | TEMPERATURE REGULATION[mV] | 0 to +50℃ | 50max | 50max | 90max | 120max | 150max | 240max | 360max | 480max |
| | | -10 to +50℃ | 60max | 60max | 120max | 150max | 180max | 290max | 450max | 600max |
| | DRIFT[mV] | *2 | 20max | 20max | 36max | 48max | 60max | 96max | 144max | 192max |
| | START-UP TIME[ms] | | 350typ(ACIN 100V, Io=100%) | | | | | | | |
| | HOLD-UP TIME[ms] | | 20typ (ACIN 100V, Io=100%) | | | | | | | |
| | OUTPUT VOLTAGE ADJUSTMENT RANGE[V] | | 2.85 - 3.63 | 4.00 - 5.50 | 7.50 - 10.0 | 10.0 - 13.2 | 13.2 - 18.0 | 19.2 - 27.0 | 28.8 - 39.6 | 39.0 - 53.0 |
| | OUTPUT VOLTAGE SETTING[V] | | 3.30 - 3.40 | 5.00 - 5.15 | 9.00 - 9.36 | 12.00 - 12.48 | 15.00 - 15.60 | 24.00 - 24.96 | 36.00 - 37.44 | 48.00 - 49.92 |
| PROTECTION CIRCUIT AND OTHERS | OVERCURRENT PROTECTION | | Works over 105% of rated current and recovers automatically | | | | | | | |
| | OVERVOLTAGE PROTECTION[V] | | 4.00 - 5.25 | 5.75 - 7.00 | 11.5 - 14.0 | 15.0 - 18.0 | 20.0 - 25.0 | 30.0 - 37.0 | 43.0 - 50.0 | 58.0 - 65.0 |
| | OPERATING INDICATION | | LED (Green) | | | | | | | |
| | REMOTE ON/OFF | | Optional (Required external power source) | | | | | | | |
| ISOLATION | INPUT-OUTPUT · RC | *3 | AC3,000V 1minute, Cutoff current = 10mA, DC500V 50MΩmin (At Room Temperature) | | | | | | | |
| | INPUT-FG | | AC2,000V 1minute, Cutoff current = 10mA, DC500V 50MΩmin (At Room Temperature) | | | | | | | |
| | OUTPUT · RC-FG | *3 | AC500V 1minute, Cutoff current = 100mA, DC500V 50MΩmin (At Room Temperature) | | | | | | | |
| ENVIRONMENT | OPERATING TEMP.,HUMID.AND ALTITUDE | | -10 to +71℃ (Required Derating), 20 - 90%RH (Non condensing) 3,000m (10,000feet) max | | | | | | | |
| | STORAGE TEMP.,HUMID.AND ALTITUDE | | -20 to +75℃, 20 - 90%RH (Non condensing) 9,000m (30,000feet) max | | | | | | | |
| | VIBRATION | | 10 - 55Hz, 19.6m/s² (2G), 3minutes period, 60minutes each along X, Y and Z axis | | | | | | | |
| | IMPACT | | 196.1m/s² (20G), 11ms, once each X, Y and Z axis | | | | | | | |
| SAFETY AND NOISE REGULATIONS | AGENCY APPROVALS (At only AC input) | | UL60950-1, C-UL(CSA60950-1), EN60950-1, EN50178 Complies with DEN-AN | | | | | | | |
| | CONDUCTED NOISE | | Complies with FCC Part15 classB, VCCI-B, CISPR22-B, EN55011-B, EN55022-B | | | | | | | |
| | HARMONIC ATTENUATOR | | Complies with IEC61000-3-2 *6 | | | | | | | |
| OTHERS | CASE SIZE/WEIGHT | | 32×82×135mm [1.26×3.23×5.31 inches] (without terminal block) (W×H×D) / 350g max (with cover : 400g max) | | | | | | | |
| | COOLING METHOD | | Convection | | | | | | | |

*1 Measured by 20MHz oscilloscope or Ripple-Noise meter(equivalent to KEISOKU-GIKEN :RM101).
*2 Drift is the change in DC output for an eight hour period after a half-hour warm-up at 25℃.
*3 Applicable when Remote ON/OFF(optional) is added. RC is insulated with input, output and FG.
*4 Derating is required.
*5 Please contact us about safety approvals for the model with option.
*6 Please contact us about class C.
* Parallel operation with other model is not possible.
* Derating is required when operated with cover.
* A sound may occur from power supply at peak loading.

## Block diagram

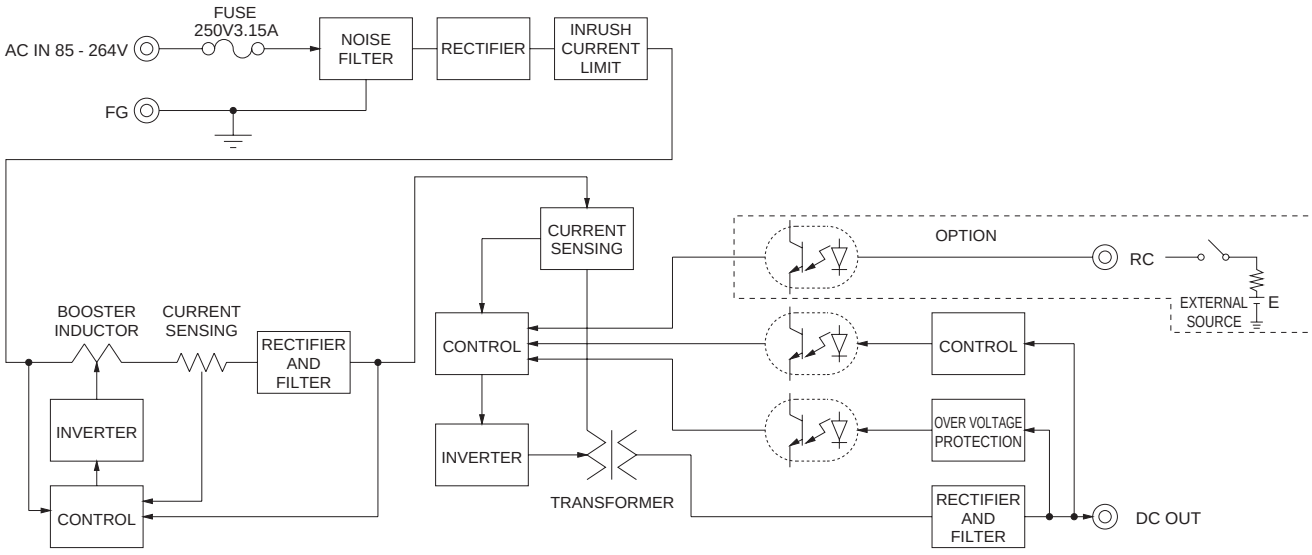


## External view

※ External size of option T,J,R,N,N1 and V is different from standard model and refer to 7 Option of instruction manual for details.

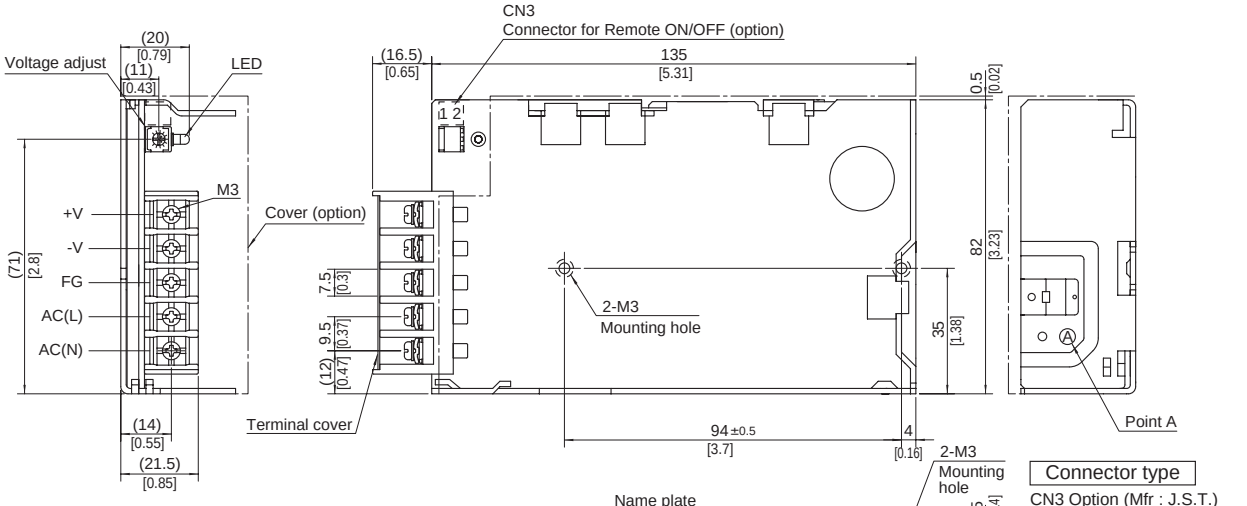


**Connector type**

CN3 Option (Mfr : J.S.T.)

| Pin No. | Contents |
|---|---|
| 1 | RC(+) |
| 2 | RC(-) |

**Barrier strip type**

Model B2B-XH-A
Mating Connector (Terminal)
XHP-2
(BXH-001T-P0.6 or SXH-001T-P0.6)

※ Tolerance : ±1 [±0.04]
※ Weight : 350g max (with cover : 400g max)
※ PCB Material/thickness : CEM3 / 1.6mm [0.06]
※ Chassis material : Aluminum
※ Dimensions in mm, [ ]= inches
※ Mounting torque : 0.49N • m(5kgf • cm)max
※ Screw tightening torque : M3 0.8N • m(8.5kgf • cm)max
※ Please connect safety ground to the unit in 2-M3 holes.

COSEL AC-DC Power Supplies Enclosed type

# PBA100F

## Ordering information

| PB | A | 100 | F | -5 | -□ |
|---|---|---|---|---|---|
| ① | ② | ③ | ④ | ⑤ | ⑥ |

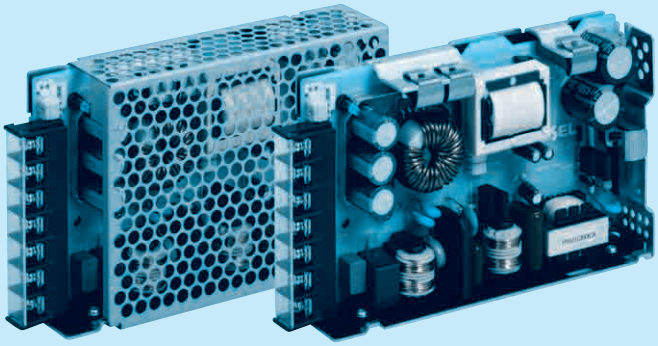

Cover is optional

**Recommended EMI/EMC Filter NAC-06-472**

High voltage pulse noise type : NAP series
Low leakage current type : NAM series
*The EMI/EMC Filter is recommended to connect with several devices.

①Series name
②Single output
③Output wattage
④Universal input
⑤Output voltage
⑥Optional *5
- C :with Coating
- G :Low leakage current (0.15mA max / ACIN 240V)
- E :Low leakage current and EMI class A (0.5mA max / ACIN 240V)
- T :Vertical terminal block
- J :Connector type (Only -12,-15,-24,-36,-48)
- R :with Remote ON/OFF
- N :with Cover (Only 24V UL508 is acquired)
- N1 :with DIN rail and Cover
- V :Output voltage setting potentiometer externally

| MODEL | PBA100F-3R3 | PBA100F-5 | PBA100F-9 | PBA100F-12 | PBA100F-15 | PBA100F-24 | PBA100F-36 | PBA100F-48 |
|---|---|---|---|---|---|---|---|---|
| MAX OUTPUT WATTAGE[W] | 66 | 100 | 94.5 | 102 | 105 | 108 | 100.8 | 100.8 |
| DC OUTPUT | 3.3V 20A | 5V 20A | 9V 10.5A | 12V 8.5A | 15V 7A | 24V 4.5A | 36V 2.8A | 48V 2.1A |

## SPECIFICATIONS

| | MODEL | | PBA100F-3R3 | PBA100F-5 | PBA100F-9 | PBA100F-12 | PBA100F-15 | PBA100F-24 | PBA100F-36 | PBA100F-48 |
|---|---|---|---|---|---|---|---|---|---|---|
| INPUT | VOLTAGE[V] | | AC85 - 264 1φ or DC120 - 370 (AC50 or DC70 Please refer to the instruction manual 2.1 Input voltage *4) | | | | | | | |
| | CURRENT[A] | ACIN 100V | 0.9typ | 1.3typ | | | | | | |
| | | ACIN 200V | 0.5typ | 0.7typ | | | | | | |
| | FREQUENCY[Hz] | | 50/60 (47 - 63) | | | | | | | |
| | EFFICIENCY[%] | ACIN 100V | 77typ | 82typ | 80typ | 81typ | 83typ | 84typ | 84typ | 84typ |
| | | ACIN 200V | 79typ | 84typ | 82typ | 83typ | 86typ | 86typ | 86typ | 86typ |
| | POWER FACTOR(Io=100%) | ACIN 100V | 0.98typ | 0.99typ | | | | | | |
| | | ACIN 200V | 0.87typ | 0.93typ | | | | | | |
| | INRUSH CURRENT[A] | ACIN 100V | 20typ (Io=100%) (At cold start) | | | | | | | |
| | | ACIN 200V | 40typ (Io=100%) (At cold start) | | | | | | | |
| | LEAKAGE CURRENT[mA] | | 0.4/0.75max (ACIN 100V/240V 60Hz, Io=100%, According to IEC60950-1,DENAN) | | | | | | | |
| OUTPUT | VOLTAGE[V] | | 3.3 | 5 | 9 | 12 | 15 | 24 | 36 | 48 |
| | CURRENT[A] | | 20 | 20 | 10.5 | 8.5 | 7 | 4.5 | 2.8 | 2.1 |
| | LINE REGULATION[mV] | | 20max | 20max | 36max | 48max | 60max | 96max | 144max | 192max |
| | LOAD REGULATION[mV] | | 40max | 40max | 100max | 100max | 120max | 150max | 240max | 240max |
| | RIPPLE[mVp-p] | 0 to +50℃ *1 | 80max | 80max | 120max | 120max | 120max | 120max | 150max | 150max |
| | | -10 - 0℃ *1 | 140max | 140max | 160max | 160max | 160max | 160max | 200max | 200max |
| | RIPPLE NOISE[mVp-p] | 0 to +50℃ *1 | 120max | 120max | 150max | 150max | 150max | 150max | 250max | 250max |
| | | -10 - 0℃ *1 | 160max | 160max | 180max | 180max | 180max | 180max | 300max | 300max |
| | TEMPERATURE REGULATION[mV] | 0 to +50℃ | 50max | 50max | 90max | 120max | 150max | 240max | 360max | 480max |
| | | -10 to +50℃ | 60max | 60max | 120max | 150max | 180max | 290max | 450max | 600max |
| | DRIFT[mV] | *2 | 20max | 20max | 36max | 48max | 60max | 96max | 144max | 192max |
| | START-UP TIME[ms] | | 350typ(ACIN 100V, Io=100%) | | | | | | | |
| | HOLD-UP TIME[ms] | | 20typ (ACIN 100V, Io=100%) | | | | | | | |
| | OUTPUT VOLTAGE ADJUSTMENT RANGE[V] | | 2.85 - 3.63 | 4.00 - 5.50 | 7.50 - 10.0 | 10.0 - 13.2 | 13.2 - 18.0 | 19.2 - 27.0 | 28.8 - 39.6 | 39.0 - 53.0 |
| | OUTPUT VOLTAGE SETTING[V] | | 3.20 - 3.40 | 5.00 - 5.15 | 9.00 - 9.36 | 12.00 - 12.48 | 15.00 - 15.60 | 24.00 - 24.96 | 36.00 - 37.44 | 48.00 - 49.92 |
| PROTECTION CIRCUIT AND OTHERS | OVERCURRENT PROTECTION | | Works over 105% of rated current and recovers automatically | | | | | | | |
| | OVERVOLTAGE PROTECTION[V] | | 4.00 - 5.25 | 5.75 - 7.00 | 11.5 - 14.0 | 15.0 - 18.0 | 20.0 - 25.0 | 30.0 - 37.0 | 43.0 - 50.0 | 58.0 - 65.0 |
| | OPERATING INDICATION | | LED (Green) | | | | | | | |
| | REMOTE SENSING | | Optional (Only -3R3, -5 Option -K) | | | | | | | |
| | REMOTE ON/OFF | | Optional (Required external power source) | | | | | | | |
| ISOLATION | INPUT-OUTPUT · RC | *3 | AC3,000V 1minute, Cutoff current = 10mA, DC500V 50MΩmin (At Room Temperature) | | | | | | | |
| | INPUT-FG | | AC2,000V 1minute, Cutoff current = 10mA, DC500V 50MΩmin (At Room Temperature) | | | | | | | |
| | OUTPUT · RC-FG | *3 | AC500V 1minute, Cutoff current = 100mA, DC500V 50MΩmin (At Room Temperature) | | | | | | | |
| ENVIRONMENT | OPERATING TEMP.,HUMID.AND ALTITUDE | | -10 to +71℃ (Required Derating), 20 - 90%RH (Non condensing) 3,000m (10,000feet) max | | | | | | | |
| | STORAGE TEMP.,HUMID.AND ALTITUDE | | -20 to +75℃, 20 - 90%RH (Non condensing) 9,000m (30,000feet) max | | | | | | | |
| | VIBRATION | | 10 - 55Hz, 19.6m/s² (2G), 3minutes period, 60minutes each along X, Y and Z axis | | | | | | | |
| | IMPACT | | 196.1m/s² (20G), 11ms, once each X, Y and Z axis | | | | | | | |
| SAFETY AND NOISE REGULATIONS | AGENCY APPROVALS (At only AC input) | | UL60950-1, C-UL(CSA60950-1), EN60950-1, EN50178 Complies with DEN-AN | | | | | | | |
| | CONDUCTED NOISE | | Complies with FCC Part15 classB, VCCI-B, CISPR22-B, EN55011-B, EN55022-B | | | | | | | |
| | HARMONIC ATTENUATOR | | Complies with IEC61000-3-2 *6 | | | | | | | |
| OTHERS | CASE SIZE/WEIGHT | | 32×93×147mm [1.26×3.66×5.79 inches] (without terminal block) (W×H×D) / 440g max (with cover : 500g max) | | | | | | | |
| | COOLING METHOD | | Convection | | | | | | | |

*1 Measured by 20MHz oscilloscope or Ripple-Noise meter(equivalent to KEISOKU-GIKEN :RM101).
*2 Drift is the change in DC output for an eight hour period after a half-hour warm-up at 25℃.
*3 Applicable when Remote ON/OFF(optional) is added. RC is insulated with input, output and FG.
*4 Derating is required.
*5 Please contact us about safety approvals for the model with option.
*6 Please contact us about class C.
* Parallel operation with other model is not possible.
* Derating is required when operated with cover.
* A sound may occur from power supply at peak loading.

## Block diagram

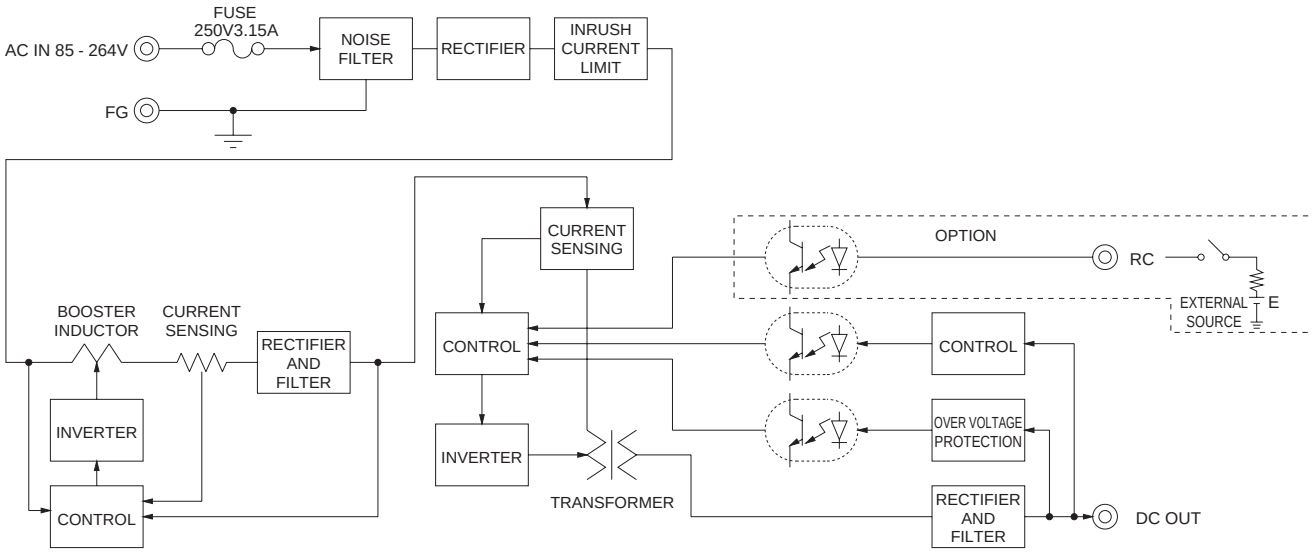


## External view

※ External size of option T,J,R,N,N1,V and K is different from standard model and refer to 7 Option of instruction manual for details.

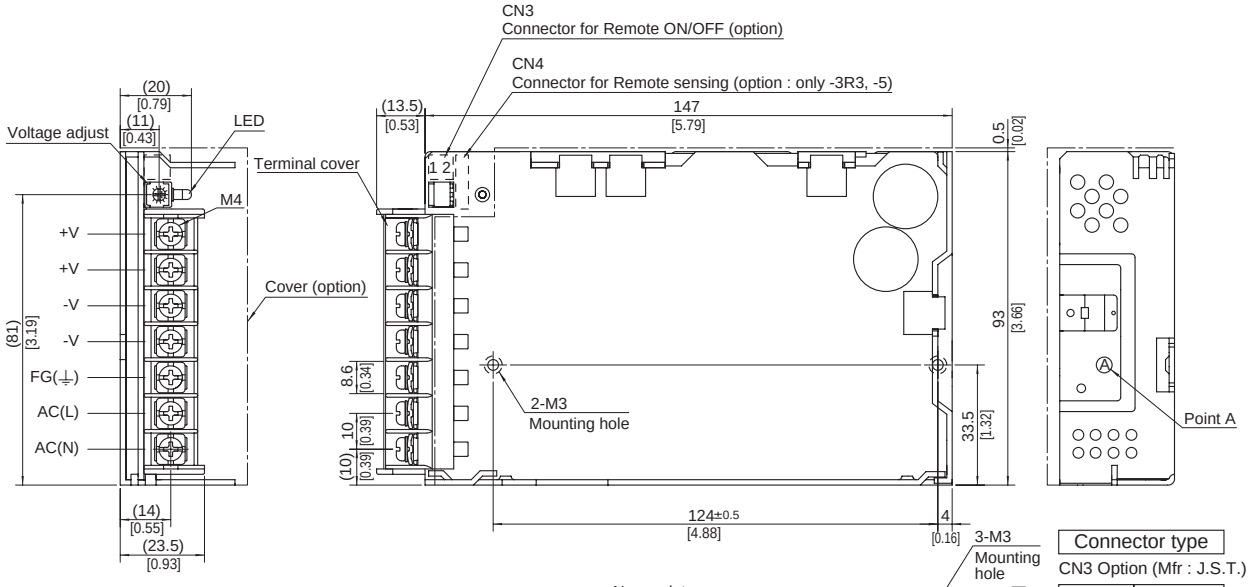


**Connector type**

CN3 Option (Mfr : J.S.T.)

| Pin No. | Contents |
|---|---|
| 1 | RC(+) |
| 2 | RC(-) |

**Barrier strip type**

Model B2B-XH-A
Mating Connector (Terminal)
XHP-2
(BXH-001T-P0.6
or SXH-001T-P0.6)

※ Tolerance : ±1 [±0.04]
※ Weight : 440g max (with cover : 500g max)
※ PCB Material/thickness : CEM3 / 1.6mm [0.06]
※ Chassis material : Aluminum
※ Dimensions in mm, [ ]= inches
※ Mounting torque : 0.49N • m(5kgf • cm)max
※ Mounting torque : M4:1.6N • m(16.9kgf • cm)max
※ Please connect safety ground to FG terminal on the unit.

COSEL AC-DC Power Supplies Enclosed type

# PBA150F

## Ordering information

| PB | A | 150 | F | -5 | -□ |
|---|---|---|---|---|---|
| ① | ② | ③ | ④ | ⑤ | ⑥ |

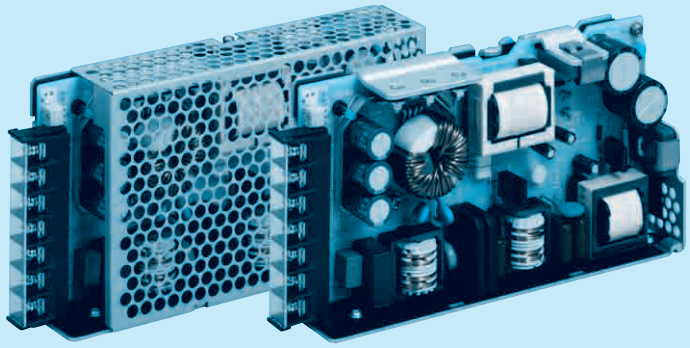

Cover is optional

**Recommended EMI/EMC Filter NAC-06-472**

High voltage pulse noise type : NAP series
Low leakage current type : NAM series
＊The EMI/EMC Filter is recommended to connect with several devices.

①Series name
②Single output
③Output wattage
④Universal input
⑤Output voltage
⑥Optional ＊5
C :with Coating
G :Low leakage current (0.15mA max / ACIN 240V)
E :Low leakage current and EMI class A (0.5mA max / ACIN 240V)
T :Vertical terminal block
J :Connector type (Only -12,-15,-24,-36,-48)
R :with Remote ON/OFF
N :with Cover (Only 24V UL508 is acquired)
N1 :with DIN rail and Cover
V :Output voltage setting potentiometer externally

| MODEL | PBA150F-3R3 | PBA150F-5 | PBA150F-9 | PBA150F-12 | PBA150F-15 | PBA150F-24 | PBA150F-36 | PBA150F-48 |
|---|---|---|---|---|---|---|---|---|
| MAX OUTPUT WATTAGE[W] | 99 | 150 | 150.3 | 156 | 150 | 156 | 154.8 | 158.4 |
| DC OUTPUT | 3.3V 30A | 5V 30A | 9V 16.7A | 12V 13A | 15V 10A | 24V 6.5A | 36V 4.3A | 48V 3.3A |

## SPECIFICATIONS

| | MODEL | | PBA150F-3R3 | PBA150F-5 | PBA150F-9 | PBA150F-12 | PBA150F-15 | PBA150F-24 | PBA150F-36 | PBA150F-48 |
|---|---|---|---|---|---|---|---|---|---|---|
| INPUT | VOLTAGE[V] | | AC85 - 264 1φ or DC120 - 370 (AC50 or DC70 Please refer to the instruction manual 2.1 Input voltage ＊4) | | | | | | | |
| | CURRENT[A] | ACIN 100V | 1.3typ | 2.0typ | | | | | | |
| | | ACIN 200V | 0.7typ | 1.0typ | | | | | | |
| | FREQUENCY[Hz] | | 50/60 (47 - 63) | | | | | | | |
| | EFFICIENCY[%] | ACIN 100V | 80typ | 83typ | 82typ | 83typ | 84typ | 85typ | 85typ | 85typ |
| | | ACIN 200V | 82typ | 86typ | 85typ | 86typ | 87typ | 88typ | 88typ | 88typ |
| | POWER FACTOR(Io=100%) | ACIN 100V | 0.98typ | 0.99typ | | | | | | |
| | | ACIN 200V | 0.87typ | 0.93typ | | | | | | |
| | INRUSH CURRENT[A] | ACIN 100V | 20typ (Io=100%) (At cold start) | | | | | | | |
| | | ACIN 200V | 40typ (Io=100%) (At cold start) | | | | | | | |
| | LEAKAGE CURRENT[mA] | | 0.4/0.75max (ACIN 100V/240V 60Hz, Io=100%, According to IEC60950-1,DENAN) | | | | | | | |
| OUTPUT | VOLTAGE[V] | | 3.3 | 5 | 9 | 12 | 15 | 24 | 36 | 48 |
| | CURRENT[A] | | 30 | 30 | 16.7 | 13 | 10 | 6.5 | 4.3 | 3.3 |
| | LINE REGULATION[mV] | | 20max | 20max | 36max | 48max | 60max | 96max | 144max | 192max |
| | LOAD REGULATION[mV] | | 40max | 40max | 100max | 100max | 120max | 150max | 240max | 240max |
| | RIPPLE[mVp-p] | 0 to +50℃ ＊1 | 80max | 80max | 120max | 120max | 120max | 120max | 150max | 150max |
| | | -10 - 0℃ ＊1 | 140max | 140max | 160max | 160max | 160max | 160max | 200max | 200max |
| | RIPPLE NOISE[mVp-p] | 0 to +50℃ ＊1 | 120max | 120max | 150max | 150max | 150max | 150max | 250max | 250max |
| | | -10 - 0℃ ＊1 | 160max | 160max | 180max | 180max | 180max | 180max | 300max | 300max |
| | TEMPERATURE REGULATION[mV] | 0 to +50℃ | 50max | 50max | 90max | 120max | 150max | 240max | 360max | 480max |
| | | -10 to +50℃ | 60max | 60max | 120max | 150max | 180max | 290max | 450max | 600max |
| | DRIFT[mV] ＊2 | | 20max | 20max | 36max | 48max | 60max | 96max | 144max | 192max |
| | START-UP TIME[ms] | | 350typ(ACIN 100V, Io=100%) | | | | | | | |
| | HOLD-UP TIME[ms] | | 20typ (ACIN 100V, Io=100%) | | | | | | | |
| | OUTPUT VOLTAGE ADJUSTMENT RANGE[V] | | 2.85 - 3.63 | 4.00 - 5.50 | 7.50 - 10.0 | 10.0 - 13.2 | 13.2 - 18.0 | 19.2 - 27.0 | 28.8 - 39.6 | 39.0 - 53.0 |
| | OUTPUT VOLTAGE SETTING[V] | | 3.30 - 3.40 | 5.00 - 5.15 | 9.00 - 9.36 | 12.00 - 12.48 | 15.00 - 15.60 | 24.00 - 24.96 | 36.00 - 37.44 | 48.00 - 49.92 |
| PROTECTION CIRCUIT AND OTHERS | OVERCURRENT PROTECTION | | Works over 105% of rated current and recovers automatically | | | | | | | |
| | OVERVOLTAGE PROTECTION[V] | | 4.00 - 5.25 | 5.75 - 7.00 | 11.5 - 14.0 | 15.0 - 18.0 | 20.0 - 25.0 | 30.0 - 37.0 | 43.0 - 50.0 | 58.0 - 65.0 |
| | OPERATING INDICATION | | LED (Green) | | | | | | | |
| | REMOTE SENSING | | Optional (Only -3R3, -5 Option -K) | | | | | | | |
| | REMOTE ON/OFF | | Optional (Required external power source) | | | | | | | |
| ISOLATION | INPUT-OUTPUT · RC ＊3 | | AC3,000V 1minute, Cutoff current = 10mA, DC500V 50MΩmin (At Room Temperature) | | | | | | | |
| | INPUT-FG | | AC2,000V 1minute, Cutoff current = 10mA, DC500V 50MΩmin (At Room Temperature) | | | | | | | |
| | OUTPUT · RC-FG ＊3 | | AC500V 1minute, Cutoff current = 100mA, DC500V 50MΩmin (At Room Temperature) | | | | | | | |
| ENVIRONMENT | OPERATING TEMP.,HUMID.AND ALTITUDE | | -10 to +71℃ (Required Derating), 20 - 90%RH (Non condensing) 3,000m (10,000feet) max | | | | | | | |
| | STORAGE TEMP.,HUMID.AND ALTITUDE | | -20 to +75℃, 20 - 90%RH (Non condensing) 9,000m (30,000feet) max | | | | | | | |
| | VIBRATION | | 10 - 55Hz, 19.6m/s² (2G), 3minutes period, 60minutes each along X, Y and Z axis | | | | | | | |
| | IMPACT | | 196.1m/s² (20G), 11ms, once each X, Y and Z axis | | | | | | | |
| SAFETY AND NOISE REGULATIONS | AGENCY APPROVALS (At only AC input) | | UL60950-1, C-UL(CSA60950-1), EN60950-1, EN50178 Complies with DEN-AN | | | | | | | |
| | CONDUCTED NOISE | | Complies with FCC Part15 classB, VCCI-B, CISPR22-B, EN55011-B, EN55022-B | | | | | | | |
| | HARMONIC ATTENUATOR | | Complies with IEC61000-3-2 ＊6 | | | | | | | |
| OTHERS | CASE SIZE/WEIGHT | | 34×93×168mm [1.34×3.66×6.61 inches] (without terminal block) (W×H×D) / 560g max (with cover : 630g max) | | | | | | | |
| | COOLING METHOD | | Convection | | | | | | | |

＊1 Measured by 20MHz oscilloscope or Ripple-Noise meter(equivalent to KEISOKU-GIKEN :RM101).
＊2 Drift is the change in DC output for an eight hour period after a half-hour warm-up at 25℃.
＊3 Applicable when Remote ON/OFF(optional) is added. RC is insulated with input, output and FG.
＊4 Derating is required.
＊5 Please contact us about safety approvals for the model with option.
＊6 Please contact us about class C.
＊ Parallel operation with other model is not possible.
＊ Derating is required when operated with cover.
＊ A sound may occur from power supply at peak loading.

## Block diagram

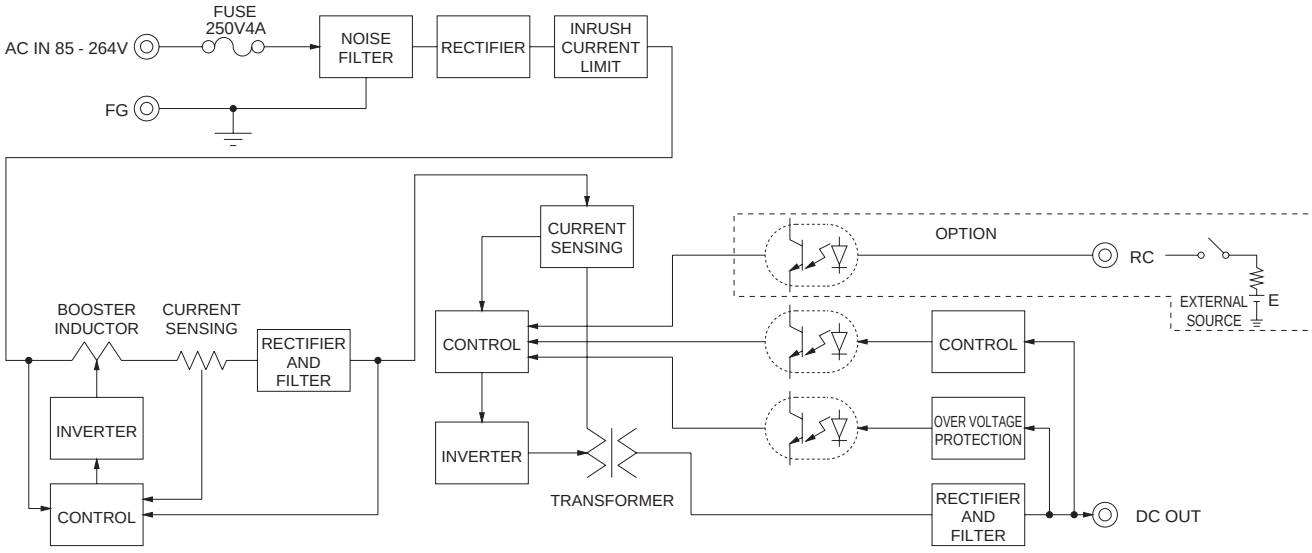


## External view

※ External size of option T,J,R,N,N1,V and K is different from standard model and refer to 7 Option of instruction manual for details.

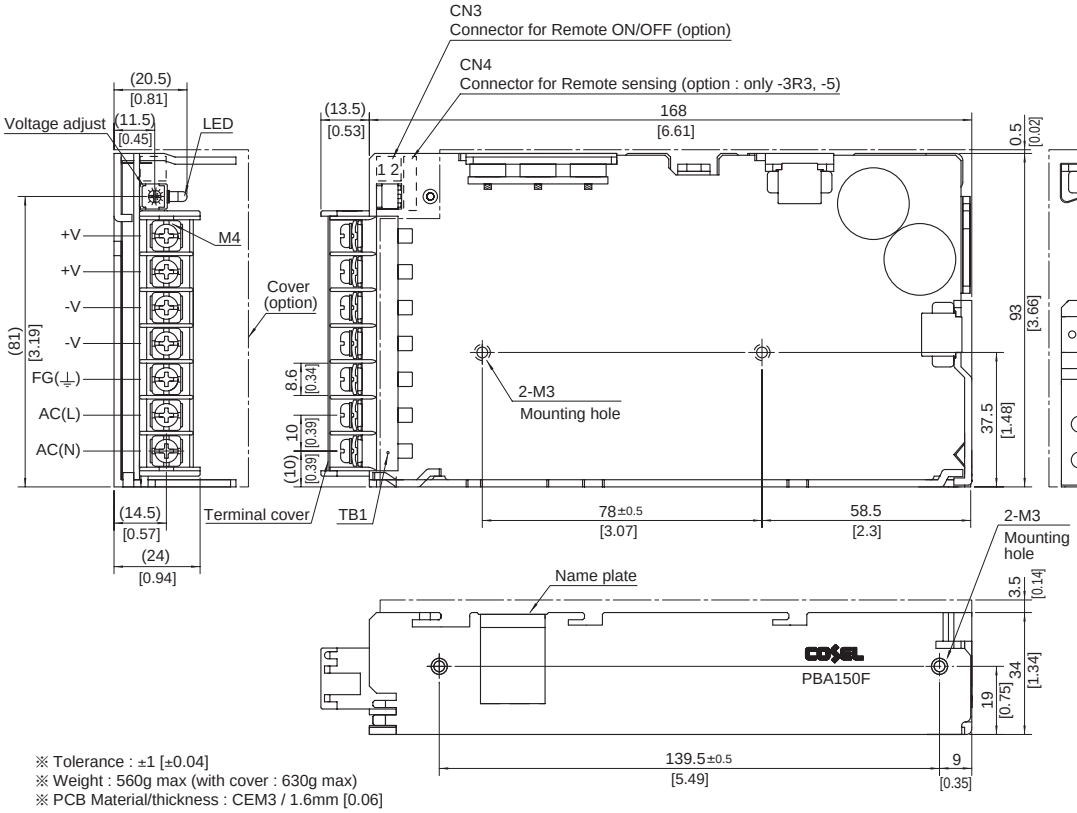


**Connector type**

CN3 Option (Mfr : J.S.T.)

| Pin No. | Contents |
|---|---|
| 1 | RC(+) |
| 2 | RC(-) |

**Barrier strip type**

Model B2B-XH-A
Mating Connector (Terminal)
XHP-2
(BXH-001T-P0.6 or SXH-001T-P0.6)

※ Tolerance : ±1 [±0.04]
※ Weight : 560g max (with cover : 630g max)
※ PCB Material/thickness : CEM3 / 1.6mm [0.06]
※ Chassis material : Aluminum
※ Dimensions in mm, [ ]= inches
※ Mounting torque : 0.49N • m(5kgf • cm)max
※ Mounting torque : M4:1.6N • m(16.9kgf • cm)max
※ Keep drawing current per pin below 20A for TB1.

# Mouser Electronics

Authorized Distributor

Click to View Pricing, Inventory, Delivery & Lifecycle Information:

Cosel:

N-PBA15-J/T F-PBA100-2 N-PBA10-J/T N-PBA50 F-PBA50-2 N-PBA75-J/T F-PBA30-1 F-PPBA30-1 N-PBA10 F-PPBA100-1 F-PBA75-1 F-PBA150-2 F-PBA10-1 N-PBA50-J/T N-PBA15 N-PBA100 F-PBA30-2 N-PBA30 N-PBA100-J/T N-PBA30-J/T N-PBA75 F-PBA75-2 F-PBA15-1 N-PBA150 F-PPBA75-1 F-PBA15-2 F-PBA100-1 F-PPBA50-1 F-PBA10-2 F-PBA150-1 F-PPBA15-1 F-PBA50-1 N-PBA150-J/T PBA100F-5-T PBA100F-5-C PBA30F-24-JVN PBA100F-3R3-CMN PBA100F-15-TN PBA100F-36-GJ PBA30F-9-JN PBA30F-48 PBA75F-5-T PBA75F-15-RVN PBA15F-3R3-N PBA75F-3R3-EN PBA75F-24-J PBA75F-48-CT PBA150F-24-RN1 PBA50F-15-GN PBA50F-36-R PBA150F-15-RN PBA10F-24-EN PBA150F-5-CEN PBA150F-12-CN PBA15F-5 PBA50F-12-R PBA50F-5-E PBA75F-12-CR PBA75F-12-RV PBA50F-24-JR PBA150F-36-N1 PBA15F-5-TN PBA100F-3R3-T PBA100F-12-RT PBA150F-15-CN1 PBA50F-24-CEN PBA30F-48-J PBA10F-5-N PBA100F-9-T PBA100F-12-TN PBA150F-48-D40N PBA150F-48-RT PBA30F-24-CT PBA15F-3R3-E PBA150F-24-C PBA15F-48-GN PBA150F-24-CTN PBA150F-5-T PBA75F-15-CRN PBA150F-5-VN PBA100F-36-GTN PBA100F-12-CN1 PBA50F-15 PBA100F-24-R PBA150F-24-GTN PBA10F-24-J PBA50F-9-TN PBA30F-5-GN PBA50F-48-R PBA75F-36-C PBA30F-12-V PBA50F-5-R PBA150F-3R3-T PBA150F-24-JN1 PBA30F-3R3-CN PBA75F-36-T PBA150F-3R3-GR PBA150F-24-E PBA100F-24-CN1 PBA100F-24-RT

Компания «ЭлектроПласт» предлагает заключение долгосрочных отношений при поставках импортных электронных компонентов на взаимовыгодных условиях!

Наши преимущества:

- Оперативные поставки широкого спектра электронных компонентов отечественного и импортного производства напрямую от производителей и с крупнейших мировых складов;
- Поставка более 17-ти миллионов наименований электронных компонентов;
- Поставка сложных, дефицитных, либо снятых с производства позиций;
- Оперативные сроки поставки под заказ (от 5 рабочих дней);
- Экспресс доставка в любую точку России;
- Техническая поддержка проекта, помощь в подборе аналогов, поставка прототипов;
- Система менеджмента качества сертифицирована по Международному стандарту ISO 9001;
- Лицензия ФСБ на осуществление работ с использованием сведений, составляющих государственную тайну;
- Поставка специализированных компонентов (Xilinx, Altera, Analog Devices, Intersil, Interpoint, Microsemi, Aeroflex, Peregrine, Syfer, Eurofarad, Texas Instrument, Miteq, Cobham, E2V, MA-COM, Hittite, Mini-Circuits,General Dynamics и др.);

Помимо этого, одним из направлений компании «ЭлектроПласт» является направление «Источники питания». Мы предлагаем Вам помощь Конструкторского отдела:

- Подбор оптимального решения, техническое обоснование при выборе компонента;
- Подбор аналогов;
- Консультации по применению компонента;
- Поставка образцов и прототипов;
- Техническая поддержка проекта;
- Защита от снятия компонента с производства.

**Как с нами связаться**

**Телефон:** 8 (812) 309 58 32 (многоканальный)
**Факс:** 8 (812) 320-02-42
**Электронная почта:** org@eplast1.ru
**Адрес:** 198099, г. Санкт-Петербург, ул. Калинина, дом 2, корпус 4, литера А.