Revision History AS4C128M16D2- 84-ball FBGA PACKAGE

Revision	Details	Date
Rev 1.0	Preliminary datasheet	March 2014
Rev 2.0	Amended page 74 corrected package dimensions "F" to be " E " and "SF" to be " SE	October 2014

Alliance Memory Inc. 551 Taylor Way, San Carlos, CA 94070
TEL: (650) 610-6800 FAX: (650) 620-9211

Alliance Memory Inc. reserves the right to change products or specification without notice.

128M x 16 bit DDRII Synchronous DRAM (SDRAM)

Confidential **Advanced (Rev. 2.0, October. /2014)**

Features

- High speed data transfer rates with system frequency up to 400 MHz
- 8 internal banks for concurrent operation
- 4-bit prefetch architecture
- Programmable CAS Latency: 3, 4 ,5 , 6 and 7
- Programmable Additive Latency: 0, 1, 2, 3 , 4, 5 and 6
- Write Latency = Read Latency -1
- Programmable Wrap Sequence: Sequential or Interleave
- Programmable Burst Length: 4 and 8
- Automatic and Controlled Precharge Command
- Power Down Mode
- Auto Refresh and Self Refresh
- Refresh Interval: 7.8 us (8192 cycles/64 ms) Tcase between 0°C and 85°C
- ODT (On-Die Termination)
- Weak Strength Data-Output Driver Option
- Bidirectional differential Data Strobe (Single-ended data-strobe is an optional feature)
- On-Chip DLL aligns DQ and DQs transitions with CK transitions
- DQS can be disabled for single-ended data strobe
- Differential clock inputs CK and CK
- JEDEC Power Supply 1.8V ± 0.1V
- VDDQ =1.8V ± 0.1V
- Available in 84-ball FBGA
- **RoHS compliant**
- PASR Partial Array Self Refresh
- tRAS lockout supported

Description

The AS4C128M16D2 is an eight bank DDR DRAM organized as 8 banks x 16Mbit x 16. The AS4C128M16D2 achieves high speed data transfer rates by employing a chip architecture that prefetches multiple bits and then synchronizes the output data to a system clock.

The chip is designed to comply with the following key DDR2 SDRAM features:(1) posted CAS with additive latency, (2) write latency = read latency-1, (3) On Die Termination.

All of the control, address, circuits are synchronized with the positive edge of an externally supplied clock. I/O s are synchronized with a pair of bidirectional strobes (DQS, DQS) in a source synchronous fashion.

Operating the eight memory banks in an interleaved fashion allows random access operation to occur at a higher rate than is possible with standard DRAMs. A sequential and gapless data rate is possible depending on burst length, CAS latency and speed grade of the device.

Table 1. Ordering Information

Part Number	Clock Frequency	Data Rate	Power Supply	Package
AS4C128M16D2-25BCN	400MHz	800Mbps/pin	V_{DD} 1.8V, V_{DDQ} 1.8V	84 ball FBGA
AS4C128M16D2-25BIN	400MHz	800Mbps/pin	VDD 1.8V, VDDQ 1.8V	84 ball FBGA

B: indicates 60-ball 8 x 10 x 1.2mm (max) FBGA package

C: indicates commercial temperature I: indicates industrial temperature

N: indicates Pb and Halogen Free ROHS

Table 2. Speed Grade Information

Speed Grade	Clock Frequency	CAS Latency	t_{RCD} (ns)	t_{RP} (ns)
DDR2-800	400 MHz	5	5	5

2Gb DDR2 SDRAM Addressing

Configuration	128Mb x 16
# of Bank	8
Bank Address	BA0 ~ BA2
Auto precharge	A10/AP
Row Address	A0 ~ A13
Column Address	A0 ~ A9

128Mx16 DDR2 PIN CONFIGURATION

(Top view: see balls through package)

	1	2	3		7	8	9
A	VDD	NC	VSS	A	VSSQ	$\overline{UDQS}$	VDDQ
B	DQ14	VSSQ	UDM	B	UDQS	VSSQ	DQ15
C	VDDQ	DQ9	VDDQ	C	VDDQ	DQ8	VDDQ
D	DQ12	VSSQ	DQ11	D	DQ10	VSSQ	DQ13
E	VDD	NC	VSS	E	VSSQ	$\overline{LDQS}$	VDDQ
F	DQ6	VSSQ	LDM	F	LDQS	VSSQ	DQ7
G	VDDQ	DQ1	VDDQ	G	VDDQ	DQ0	VDDQ
H	DQ4	VSSQ	DQ3	H	DQ2	VSSQ	DQ5
J	VDDL	VREF	VSS	J	VSSDL	CK	VDD
K		CKE	$\overline{WE}$	K	$\overline{RAS}$	$\overline{CK}$	ODT
L	BA2	BA0	BA1	L	$\overline{CAS}$	$\overline{CS}$	
M		A10/AP	A1	M	A2	A0	VDD
N	VSS	A3	A5	N	A6	A4	
P		A7	A9	P	A11	A8	VSS
R	VDD	A12	NC	R	NC	A13	

Signal Pin Description

Pin	Type	Function
CK, $\overline{CK}$	Input	The system clock input. All inputs except DQs and DMs are sampled on the rising edge of CK.
CKE	Input	Activates the CK signal when high and deactivates the CK signal when low, thereby initiates either the Power Down mode, or the Self Refresh mode.
$\overline{CS}$	Input	$\overline{CS}$ enables the command decoder when low and disables the command decoder when high. When the command decoder is disabled, new commands are ignored but previous operations continue.
$\overline{RAS}$, $\overline{CAS}$, $\overline{WE}$	Input	When sampled at the positive rising edge of the clock, $\overline{CAS}$, $\overline{RAS}$, and $\overline{WE}$ define the command to be executed by the SDRAM.
A0 - A13	Input	During a Bank Activate command cycle, A0-A13 defines the row address (RA0-RA13) when sampled at the rising clock edge. During a Read or Write command cycle, A0-A9 defines the column address (CA0-CA9) when sampled at the rising clock edge. In addition to the column address, A10(=AP) is used to invoke autoprecharge operation at the end of the burst read or write cycle. If A10 is high, autoprecharge is selected and BA0, BA1, BA2 defines the bank to be precharged. If A10 is low, autoprecharge is disabled. During a Precharge command cycle, A10(=AP) is used in conjunction with BA0, BA1and BA2 to control which bank(s) to precharge. If A10 is high, all eight banks will be precharged simultaneously regardless of state of BA0 , BA1 and BA2.
BA0-BA2	Input	Selects which bank is to be active.
DQx	Input/ Output	Data Input/Output pins operate in the same manner as on conventional DRAMs. DQ0-DQ15 for x16 component.
LDQS, $\overline{LDQS}$, UDQS, $\overline{UDQS}$	Input/ Output	Data Strobe, output with read data, input with write data. Edge-aligned with read data, centered in write data. For x16 component, LDQS corresponds to the data on DQ0-DQ7; UDQS coresponds to the data on DQ8-DQ15. The data strobes LDQS and UDQS may be used in single ended mode or paired with optional complimentary signals $\overline{LDQS}$ and $\overline{UDQS}$ to provide differential pair signaling to the system during both reads and writes. An EMRS(1) control bit enables or disables all complementary data strobe signals.
LDM, UDM	Input	DM is an input mask signal for write data. Input data is masked when DM is sampled high along with that input data during a Write access. DM is sampled on both edges of DQS. Although DM pins are input only, the DM loading is designed to match that of DQ and DQS pins. LDM is DM for lower byte DQ0-DQ7 and UDM is DM for upper byte DQ8-DQ15.
VDD, VSS	Supply	Power and ground for the input buffers and the core logic.
VDDQ, VSSQ	Supply	Isolated power supply and ground for the output buffers to provide improved noise immunity.
VREF	Input	SSTL Reference Voltage for inputs
VDDL, VSSDL	Supply	Isolated power supply and ground for the DLL to provide improved noise immunity.
ODT	Input	On Die Termination Enable. It enables termination resistance internal to the DRAM. For x16 configuration, ODT is applied to each DQ, UDQS/$\overline{UDQS}$, LDQS/$\overline{LDQS}$, UDM and LDM signal. ODT will be ignored if EMRS disable the function.

Simplified State Diagram

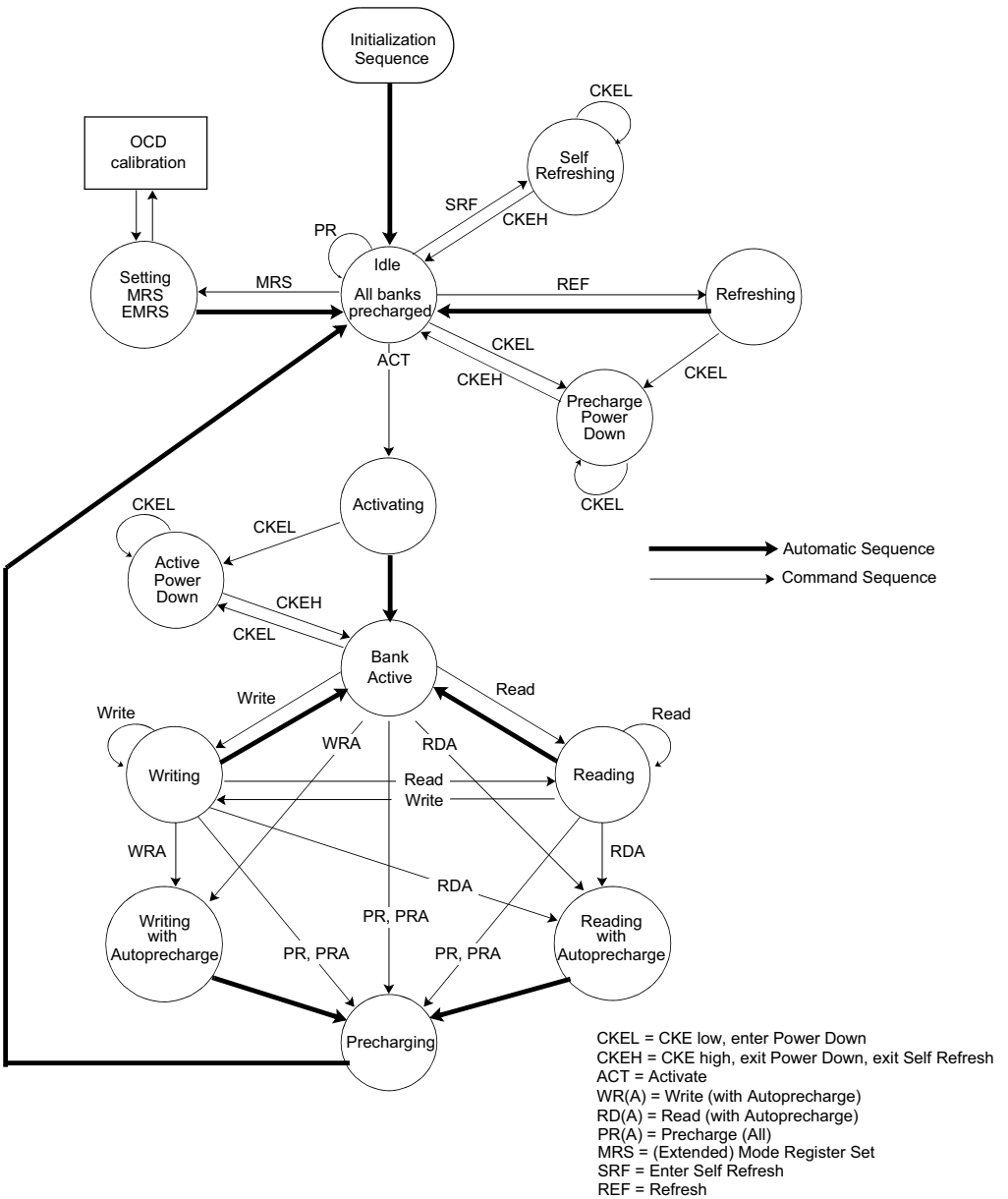

Note: Use caution with this diagram. It is intended to provide a floorplan of the possible state transitions and the commands to control them, not all details. In particular situations involving more than one bank, enabling/disabling on-die termination, Power Down enty/exit - among other things - are not captured in full detail.

Basic Functionality

Read and write accesses to the DDR2 SDRAM are burst oriented; accesses start at a selected location and continue for a burst length of four or eight in a programmed sequence. Accesses begin with the registration of an Active command, which is then followed by a Read or Write command. The address bits registered coincident with the active command are used to select the bank and row to be accessed (BA0, BA1 select the bank; A0-A13 select the row). The address bits registered coincident with the Read or Write command are used to select the starting column location for the burst access and to determine if the auto precharge command is to be issued.

Prior to normal operation, the DDR2 SDRAM must be initialized. The following sections provide detailed information covering device initialization, register definition, command descriptions and device operation.

Power up and Initialization

DDR2 SDRAMs must be powered up and initialized in a predefined manner. Operational procedures other than those specified may result in undefined operation.

Power-up and Initialization Sequence

The following sequence is required for POWER UP and Initialization.

1. Apply power and attempt to maintain CKE below 0.2*VDDQ and ODT[*1] at a low state (all other inputs may be undefined.)

   - VDD, VDDL and VDDQ are driven from a single power converter output, AND
   - VTT is limited to 0.95V max, AND
   - Vref tracks VDDQ/2.

   or

   - Apply VDD before or at the same time as VDDL.
   - Apply VDDL before or at the same time as VDDQ.
   - Apply VDDQ before or at the same time as VTT & Vref. at

   least one of these two sets of conditions must be met.

2. Start clock and maintain stable condition.
3. For the minimum of 200us after stable power and clock (CK, $\overline{CK}$), then apply NOP or deselect & take CKE high.
4. Wait minimum of 400ns then issue precharge all command. NOP or deselect applied during 400ns period.
5. Issue EMRS(2) command. (To issue EMRS(2) command, provide “Low” to BA0, “High” to BA1.)
6. Issue EMRS(3) command. (To issue EMRS(3) command, provide “High” to BA0 and BA1.)
7. Issue EMRS to enable DLL. (To issue "DLL Enable" command, provide "Low" to A0, "High" to BA0 and "Low" to BA1 and A12.)
8. Issue a Mode Register Set command for “DLL reset”.
   (To issue DLL reset command, provide "High" to A8 and "Low" to BA0-1)
9. Issue precharge all command.
10. Issue 2 or more auto-refresh commands.
11. Issue a mode register set command with low to A8 to initialize device operation. (i.e. to program operating parameters without resetting the DLL.
12. At least 200 clocks after step 8, EMRS OCD Default command (A9=A8= A7=1) followed by EMRS OCD Exit command (A9=A8=A7=0) must be issued with other operating parameters of EMRS.

13. The DDR2 SDRAM is now ready for normal operation.

*1) To guarantee ODT off, VREF must be valid and a low level must be applied to the ODT pin.

Initialization Sequence after Power Up

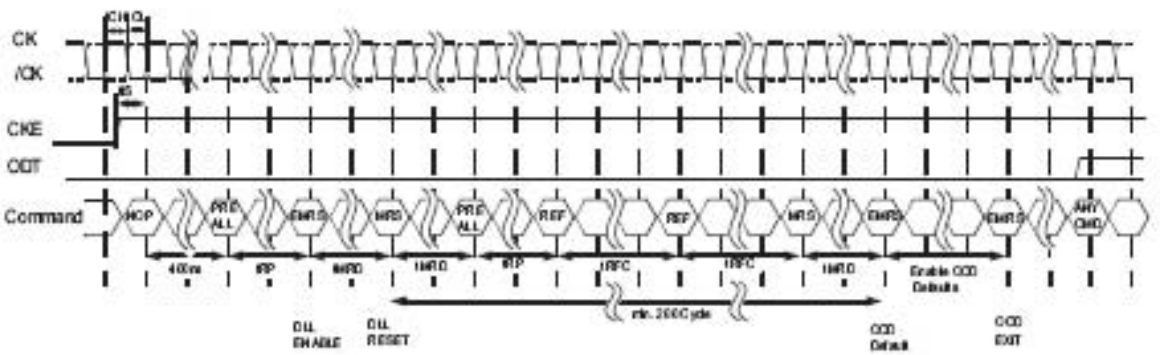

Programming the Mode Register

For application flexibility, burst length, burst type, $\overline{\text{CAS}}$ latency, DLL reset function, write recovery time (tWR) are user defined variables and must be programmed with a Mode Register Set (MRS) command. Additionally, DLL disable function, driver impedance, additive CAS latency, single-ended strobe and ODT (On Die Termination) are also user defined variables and must be programmed with an Extended Mode Register Set (EMRS) command. Contents of the Mode Register (MR) or Extended Mode Registers (EMR(#)) can be altered by re-executing the MRS and EMRS Commands. If the user chooses to modify only a subset of the MRS or EMRS variables, all variables must be redefined when the MRS or EMRS commands are issued.

MRS, EMRS and Reset DLL do not affect array contents, which means initialization including those can be executed any time after power-up without affecting array contents.

DDR2 SDRAM Mode Register Set (MRS)

The mode register stores the data for controlling the various operating modes of DDR2 SDRAM. It controls CAS latency, burst length, burst sequence, test mode, DLL reset, tWR and various vendor specific options to make DDR2 SDRAM useful for various applications. The default value of the mode register is not defined, therefore the mode register must be written after power-up for proper operation. The mode register is written by asserting low on CS, RAS, CAS, WE, BA0 and BA1, while controlling the state of address pins A0 ~ A13. The DDR2 SDRAM should be in all bank precharge with CKE already high prior to writing into the mode register. The mode register set command cycle time (tMRD) is required to complete the write operation to the mode register. The mode register contents can be changed using the same command and clock cycle requirements during normal operation as long as all banks are in the precharge state. The mode register is divided into various fields depending on functionality. Burst length is defined by A0 ~ A2 with options of 4 and 8 bit burst lengths. The burst length decodes are compatible with DDR SDRAM. Burst address sequence type is defined by A3, CAS latency is defined by A4 ~ A6. The DDR2 doesn't support half clock latency mode. A7 is used for test mode. A8 is used for DLL reset. A7 must be set to low for normal MRS operation. Write recovery time tWR is defined by A9 ~ A11. Refer to the table for specific codes.

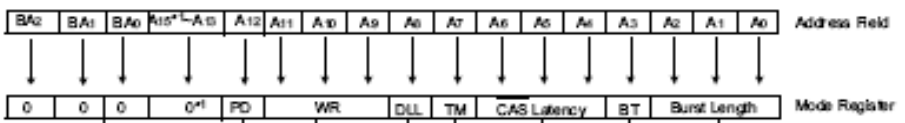

A8	DLL Reset
0	No
1	Yes

A7	mode
0	Normal
1	Test

A3	Burst Type
0	Sequential
1	Interleave

Burst Length

A2	A1	A0	BL
0	1	0	4
0	1	1	8

A12	Active power down exit time
0	Fast exit(use tXARD)
1	Slow exit(use tXARDS)

Write recovery for autoprecharge

A11	A10	A9	WR(cycles)
0	0	0	Reserved
0	0	1	2
0	1	0	3
0	1	1	4
1	0	0	5
1	0	1	6
1	1	0	Reserved
1	1	1	Reserved

*2

CAS Latency

A6	A5	A4	Latency
0	0	0	Reserved
0	0	1	Reserved
0	1	0	Reserved
0	1	1	3
1	0	0	4
1	0	1	5
1	1	0	6
1	1	1	Reserved

BA1	BA0	MRS mode
0	0	MRS
0	1	EMRS(1)
1	0	EMRS(2)
1	1	EMRS(3): Reserved

*1 A14 and A15 is reserved for future usage.

*2 : WR(write recovery for autoprecharge) min is determined by tCK max and WR max is determined by tCK min. WR in clock cycles is calculated by dividing tWR (in ns) by tCK (in ns) and rounding up a non-integer value to the next integer (WR[cycles] = tWR(ns)/tCK(ns)). The mode register must be programmed to this value. This is also used with tRP to determine tDAL.

DDR2 SDRAM Extended Mode Register Set

EMRS(1)

The extended mode register(1) stores the data for enabling or disabling the DLL, output driver strength, ODT value selection and additive latency. The default value of the extended mode register is not defined, therefore the extended mode register must be written after power-up for proper operation. Extended mode register(1) is written by asserting low on CS, RAS, CAS, WE and high on BA0 and low on BA1, and controlling rest of pins A0 ~ A13.

The DDR2 SDRAM should be in all bank precharge with CKE already high prior to writing into the extended mode register. The mode register set command cycle time (tMRD) must be satisfied to complete the write operation to the extended mode register. Mode register contents can be changed using the same command and clock cycle requirements during normal operation as long as all banks are in the precharge state. A0 is used for DLL enable or disable. A1 is used for enabling reduced strength data-output drive. A3~A5 determines the additive latency. A2 and A6 are used for ODT value selection, A7~A9 are used for OCD control, A10 is used for DQS disable and A11 is used for RDQS enable.

DLL Enable / Disable

The DLL must be enabled for normal operation. DLL enable is required during power up initialization, and upon returning to normal operation after having the DLL disabled. The DLL is automatically disabled when entering self refresh operation and is automatically re-enabled upon exit of self refresh operation. Any time the DLL is enabled (and subsequently reset), 200 clock cycles must occur before a Read command can be issued to allow time for the internal clock to be synchronized with the external clock. Failing to wait for synchronization to occur may result in a violation of the tAC or tDQSCK parameters.

EMRS(1) Programming

BA2	BA1	BA0	A15*1~A13	A12	A11	A10	A9	A8	A7	A6	A5	A4	A3	A2	A1	A0	Address Field
0	0	1	0*1	Qoff	RDQS	$\overline{DQS}$	OCD program			Rtt	Additive latency			Rtt	D.I.C	DLL	Extended Mode Register

BA1	BA0	MRS mode
0	0	MRS
0	1	EMRS(1)
1	0	EMRS(2)
1	1	EMRS(3):Reserved

A6	A2	Rtt (NOMINAL)
0	0	ODT Disable
0	1	75 ohm
1	0	150 ohm
1	1	50 ohm

A0	DLL Enable
0	Enable
1	Disable

A9	A8	A7	OCD operation
0	0	0	OCD exit
0	0	1	Reserved
0	1	0	Reserved
1	0	0	Reserved
1	1	1	Enable OCD defaults *

* : After setting to default, OCD mode needs to be exited by setting A9-A7 to 000.

A5	A4	A3	Additive Latency
0	0	0	0
0	0	1	1
0	1	0	2
0	1	1	3
1	0	0	4
1	0	1	5
1	1	0	6
1	1	1	Reserved

A12	Qoff (Optional)*
0	Output buffer enabled
1	Output buffer disabled

* : Outputs disabled - DQs, DQSs, DQSs, $\overline{DQSs}$, RDQS, RDQS. This feature is used in conjunction with dimm IDD measurements when IDDQ is not desired to be included.

A1	Output Driver Impendence	Driver Size
0	Normal	100%
1	Weak	60%

A10	$\overline{DQS}$
0	Enable
1	Disable

A11	RDQS Enable
0	Disable
1	Enable

* If RDQS is enabled, the D M Function is disabled. RDQS is active for reads and don't care for writes.

A11 (RDQS Enable)	A10 (DQS Enable)	Strobe Function Matrix			
		RDQS/DM	RDQS	DQS	DQS
0 (Disable)	0 (Enable)	DM	Hi-z	DQS	$\overline{DQS}$
0 (Disable)	1 (Disable)	DM	Hi-z	DQS	Hi-z
1 (Enable)	0 (Enable)	RDQS	$\overline{RDQS}$	DQS	$\overline{DQS}$
1 (Enable)	1 (Disable)	RDQS	Hi-z	DQS	Hi-z

*1 : A14 and A15 is reserved for future usage.

EMRS(2) Programming*1: PASR

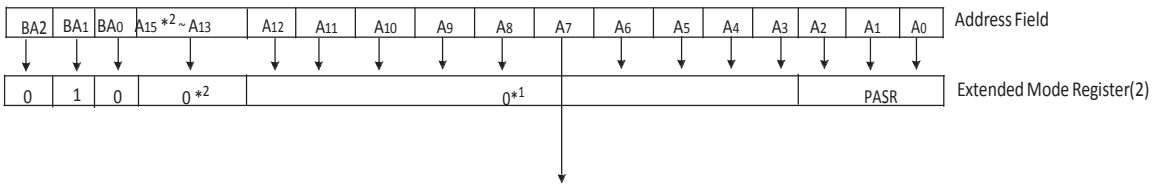

A7	High Temperature Self Refresh rate enable
0	Commercial temperature default
1	Industrial temperature option: use if T_c exceeds 85°C

*1 : BA0 , BA1, and BA2 must be programmed to 0 when setting the mode register during initialization.
*2 : A14 and A15 is reserved for future usage.
*3 : While Tc > 85° C, Double refresh rate (tREFI: 3.9us) is required, and to enter self refresh mode at this temperature range it must be required an EMRS command to change itself refresh rate.

The PASR bits allows the user to dynamically customize the memory array size to the actual needs. This feature allows the device to reduce standby current by refreshing only the memory arrays that contain essential data. The refresh options are full array, one-half array, one-quarter array, three-fourth array, or none of the array. The mapping of these partitions can start at either the beginning or the end of the address map. Please see the following table.

P ASR[2]	P ASR[1]	P ASR[0]	ACTIVE SECTION
0	0	0	Full array
0	0	1	1/2 array (Banks 0,1, 2, 3)
0	1	0	1/4 array (Bank 0, 1)
0	1	1	1/8 array (Bank 0)
1	0	0	3/4 array (Banks 2,3,4,5,6,7)
1	0	1	1/2 array (Banks 4, 5, 6, 7)
1	1	0	1/4 array (Bank 6,7)
1	1	1	1/8 array (Bank 7)

EMRS(3) Programming: Reserved*1

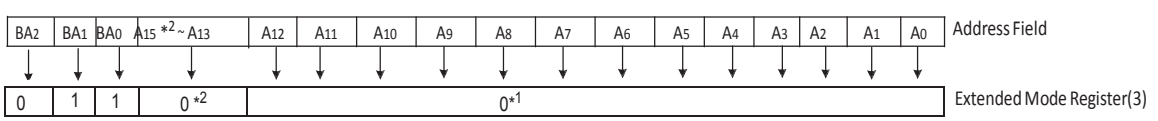

*1 : EMRS(3) is reserved for future use and all bits except BA0, BA1, BA2 must be programmed to 0 when setting the mode register during initialization.
*2 : A14 and A15 is reserved for future usage.

On-Die Termination (ODT)

On Die Termination (ODT) is a feature that allows a DRAM to turn on/off termination resistance for each DQ, UDQS/UDQS, LDQS/LDQS, UDM and LDM via the ODT control pin. The ODT feature is designed to improve signal integrity of the memory channel by allowing the DRAM controller to independently turn on/off termination resistance for any or all DRAM devices.

The ODT function is supported for ACTIVE and STANDBY modes. ODT is turned off and not supported in SELF REFRESH mode.

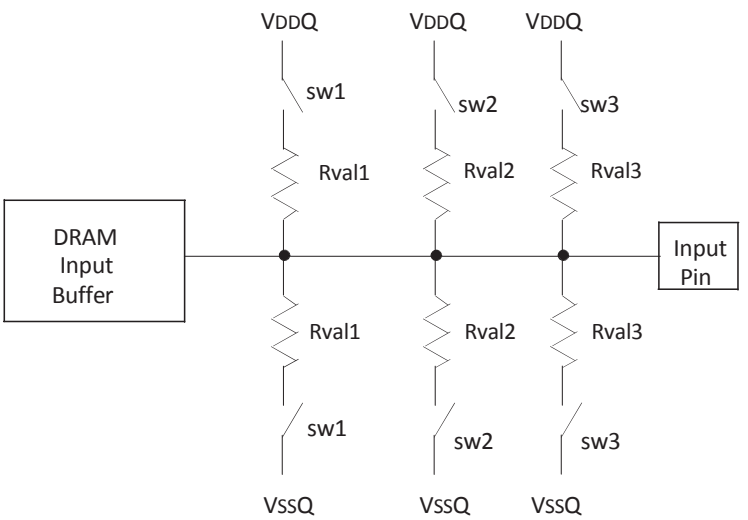

Switch (sw1, sw2, sw3) is enabled by ODT pin.
Selection among sw1, sw2, and sw3 is determined by "Rtt (nominal)" in EMR. Termination included on all DQs, UDQS/UDQS, LDQS/LDQS, UDM and LDM pins.

Functional representation of ODT

ODT Truth Table

The ODT Truth Table shows which of the input pins are terminated depending on the state of address bit A10and A11 in the EMRS.

To activate termination of any of these pins, the ODT function has to be enabled in the EMRS by address bits A6 and A2.

Input Pin	EMRS Adress Bit A10	EMRS Adress Bit A11
DQ0~DQ7	X	X
DQ8~DQ15	X	X
LDQS	X	X
$\overline{\text{LDQS}}$	0	X
UDQS	X	X
$\overline{\text{UDQS}}$	0	X
LDM	X	X
UDM	X	X

X=Don't Care
0=Signal Low
1=Signal High

DC Electrical Characteristics and Operation Conditions :

Parameter / Condition	Symbol	min.	nom.	max.	Units	Notes
Rtt eff. impedance value for EMRS(A6,A2)= 0,1; 75 ohm	Rtt1(eff)	60	75	90	ohm	1
Rtt eff. impedance value for EMRS(A6,A2)= 1,0; 150 ohm	Rtt2(eff)	120	150	180	ohm	1
Rtt eff. impedance value for EMRS(A6,A2)= 1,1; 50 ohm	Rtt3(eff)	40	50	60	ohm	1
Deviation of VM with respect to $V_{DDQ}/2$	delta VM	-6		+6	%	2

1) Measurement Definition for Rtt(eff) :

Apply VIHac and VILac to test pin separately, then measure current I(VIHac) and I(VILac) respectively

Rtt(eff) = (VIHac - VILac) /(I(VIHac) - I(VILac))

2) Measurement Definition for VM :

Measure voltage (VM) at test pin (midpoint) with no load:

delta VM = ((2* VM / V_{DDQ}) - 1) x 100%

AC Electrical Characteristics and Operation Conditions :

Symbol	Parameter / Condition	min.	max.	Units	Notes
t_{AOND}	ODT turn-on delay	2	2	t_{CK}	
t_{AON}	ODT turn-on	t_{AC}(min)	t_{AC}(max) + 0.7	ns	1
t_{AONPD}	ODT turn-on (Power-Down Mode)	t_{AC}(min) + 2	2 t_{CK} + t_{AC}(max) + 1	ns	3
t_{AOFD}	ODT turn-off delay	2.5	2.5	t_{CK}	
t_{AOF}	ODT turn-off	t_{AC}(min)	t_{AC}(max) + 0.6	ns	2
t_{AOFPD}	ODT turn-off (Power-Down Mode)	t_{AC}(min) + 2	2.5 t_{CK} + t_{AC}(max) + 1	ns	3
t_{ANPD}	ODT to Power Down Mode Entry Latency	3	X	t_{CK}	4
t_{AXPD}	ODT Power Down Exit Latency	8		t_{CK}	4

1) ODT turn on time min. is when the device leaves high impedance and ODT resistance begins to turn on. ODT turn on time max. is when the ODT resistance is fully on. Both are measured from t_{AOND}.

2) ODT turn off time min. is when the device stars to turn-off ODT resistance.
ODT turn off time max. is when the bus is in high impedance. Both are measured from t_{AOFD}.

3) For Standard Active Power-down - with MRS A12 ="0" - the non-power-down timings (t_{AOND}, t_{AON}, t_{AOFD} and t_{AOF}) apply

4) t_{ANPD} and t_{AXPD} define the timing limit when either Power Down Mode Timings (t_{AONPD}, t_{AOFPD}) or Non-Power Down Mode timings (t_{AOND}, t_{AOFD}) have to be applied.

ODT Timing for Active / Standby (Idle) Mode and Standard Active Power-Down Mode

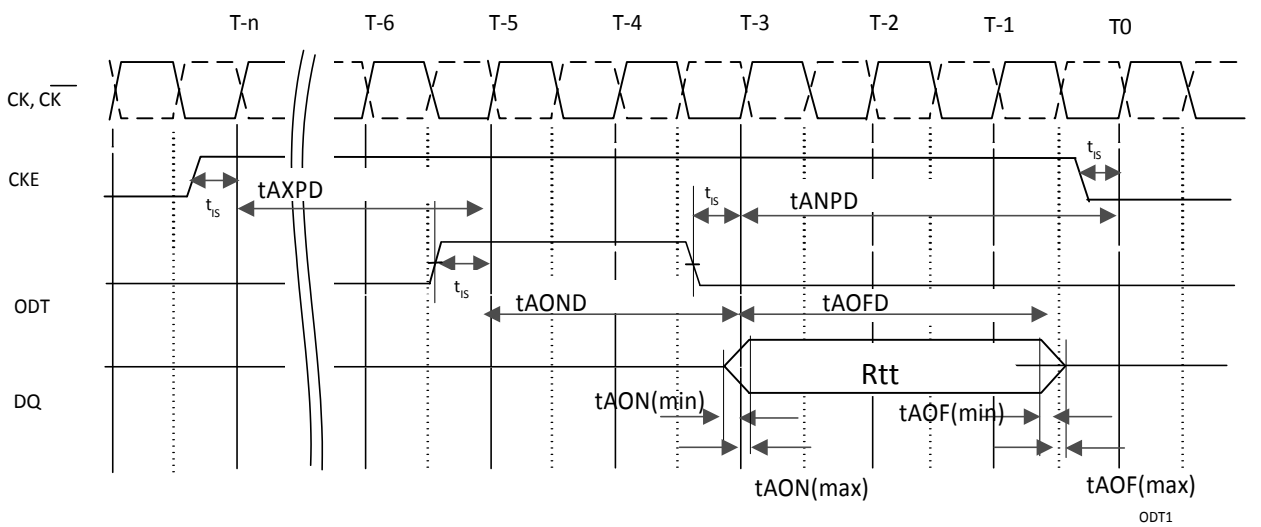

1) Both ODT to Power Down Entry and Exit Latency timing parameter tANPD and tAXPD are met, therefore Non-Power Down Mode timings have to be applied.
2) ODT turn-on time ($t_{AON,min}$) is when the device leaves high impedance and ODT resistance begins to turn on. ODT turn on time max. ($t_{AON,max}$) is when the ODT resistance is fully on. Both are measured from t_{AOND}.
3) ODT turn off time min. ($t_{AOF,min}$) is when the device starts to turn off the ODT resistance. ODT turn off time max. ($t_{AOF,max}$) is when the bus is in high impedance. Both are measured from t_{AOFD}.

ODT Timing for Precharge Power-Down and Low Power Power-Down Mode

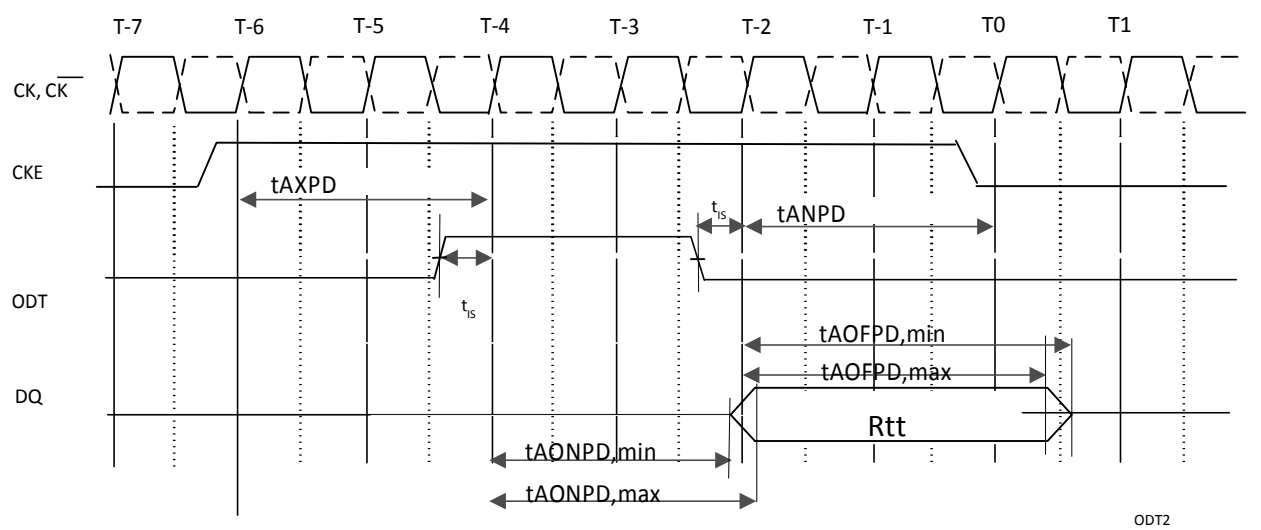

1) Both ODT to Power Down Entry and Exit Latencies tANPD and tAXPD are not met, therefore Power-Down Mode timings have to be applied.

Bank Activate Command

The Bank Activate command is issued by holding CAS and WE high with CS and RAS low at the rising edge of the clock. The bank addresses of BA0-BA2 are used to select the desired bank. The row addresses A0 through A13 are used to determine which row to activate in the selected bank. The Bank Activate command must be applied before any Read or Write operation can be executed. Immediately after the bank active command, the DDR2 SDRAM can accept a read or write command (with or without Auto-Precharge) on the following clock cycle. If an R/W command is issued to a bank that has not satisfied the tRCDmin specification, then additive latency must be programmed into the device to delay the R/W command which is internally issued to the device. The additive latency value must be chosen to assure tRCDmin is satisfied. Additive latencies of 0,1,2,3,4,5 and 6 are supported.

Once a bank has been activated it must be precharged before another Bank Activate command can be applied to the same bank. The bank active and precharge times are defined as tRAS and tRP, respectively. The minimum time interval between successive Bank Activate commands to the same bank is determined (tRC). The minimum time interval between Bank Active commands, to any other bank, is the Bank A to Bank B delay time (tRRD).

Bank Activate Command Cycle: tRCD = 3, AL = 2, tRP = 3, tRRD = 2

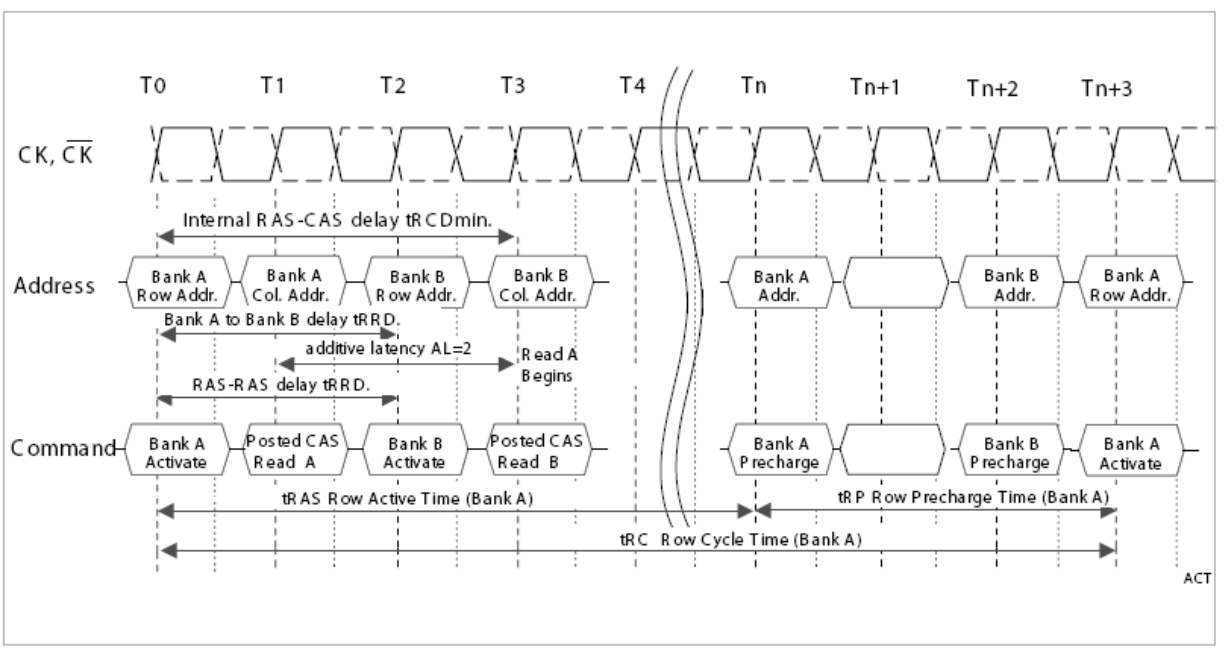

Read and Write Commands and Access Modes

After a bank has been activated, a read or write cycle can be executed. This is accomplished by setting RAS high, $\overline{CS}$ and CAS low at the clock's rising edge. WE must also be defined at this time to determine whether the access cycle is a read operation (WE high) or a write operation (WE low). The DDR2 SDRAM pro- vides a wide variety of fast access modes. The boundary of the burst cycle is restricted to specific segments of the page length.

For example, the 16Mbit x 16 I/O x 8 Bank chip has a page length of 1024 bits (defined by CA0-CA9).
In case of a 4-bit burst operation (burst length = 4) the page length of 1024 bits is divided into 256 uniquely addressable segments (4-bits x 16 I/O each). The 4-bit burst operation will occur entirely within one of the 256 segments (defined by CA0-CA7) beginning with the column address supplied to the device during the Read or Write Command (CA0-CA9). The second, third and fourth access will also occur within this segment, however, the burst order is a function of the starting address, and the burst sequence.

In case of an 8-bit burst operation (burst length = 8) the page length of 1024 bits is divided into 128 uniquely addressable double segments (8-bits x 16 I/O each). The 8-bit burst operation will occur entirely within one of the 128 double segments (defined by CA0-CA6) beginning with the column address supplied to the deivce during the Read or Write Command (CA0-CA9).

A new burst access must not interrupt the previous 4 bit burst operation in case of BL = 4 setting. Therefore the minimum $\overline{CAS}$ to $\overline{CAS}$ delay (tCCD) is a minimum of 2 clocks for read or write cycles.

For 8 bit burst operation (BL = 8) the minimum $\overline{CAS}$ to $\overline{CAS}$ delay (tCCD) is 4 clocks for read or write cycles. Burst interruption is allowed with 8 bit burst operation. For details see the "Burst Interrupt" - Section of this datasheet.

Read Burst Timing Example : (CL = 3, AL = 0, RL = 3, BL = 4)

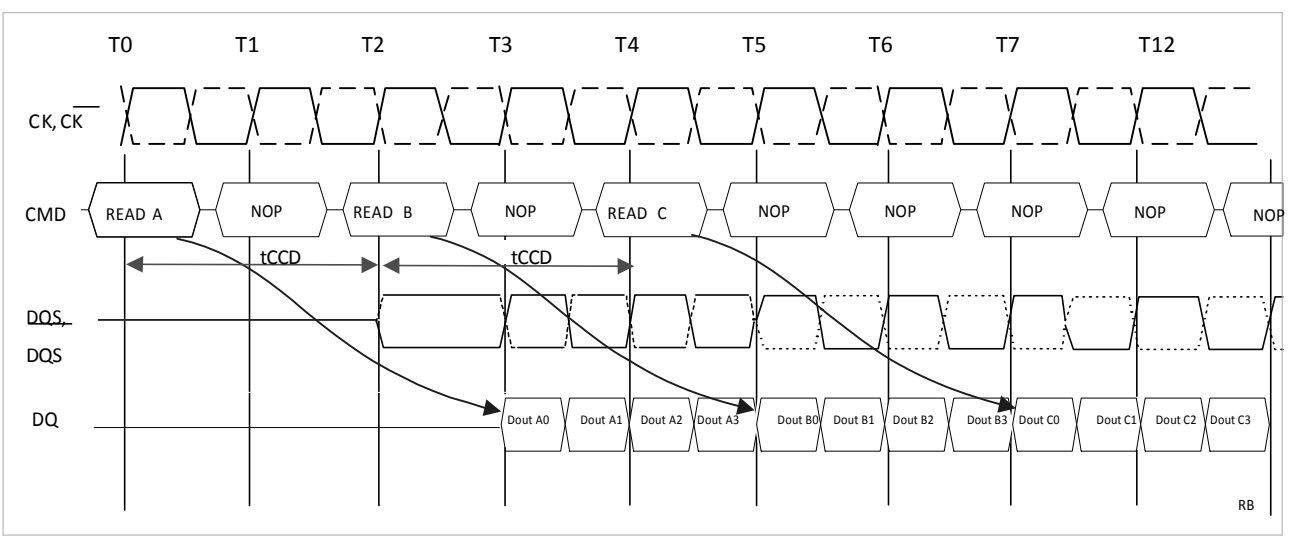

Posted $\overline{CAS}$

Posted $\overline{CAS}$ operation is supported to make command and data bus efficient for sustainable bandwidths in DDR2 SDRAM. In this operation, the DDR2 SDRAM allows a Read or Write command to be issued immediately after the $\overline{RAS}$ bank activate command (or any time during the $\overline{RAS}$ to $\overline{CAS}$ delay time, tRCD, period). The command is held for the time of the Additive Latency (AL) before it is issued inside the device. The Read Latency (RL) is the sum of AL and the $\overline{CAS}$ latency (CL). Therefore if a user chooses to issue a Read/Write command before the tRCDmin, then AL greater than 0 must be written into the EMRS. The Write Latency (WL) is always defined as RL - 1 (Read Latency -1) where Read Latency is defined as the sum of Additive Latency plus $\overline{CAS}$ latency (RL=AL+CL). If a user chooses to issue a Read command after the tRCDmin period, the Read Latency is also defined as RL = AL + CL.

Read followed by a write to the same bank, Activate to Read delay < tRCDmin: AL = 2 and CL = 3, RL = (AL + CL) = 5, WL = (RL -1) = 4, BL = 4

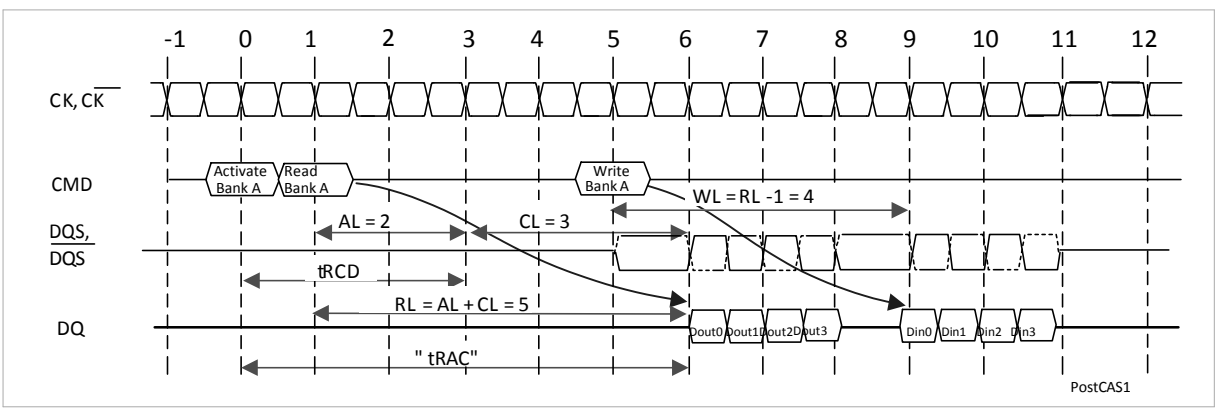

Read followed by a write to the same bank, Activate to Read delay < tRCDmin: AL = 2 and CL = 3, RL = (AL + CL) = 5, WL = (RL -1) = 4, BL = 8

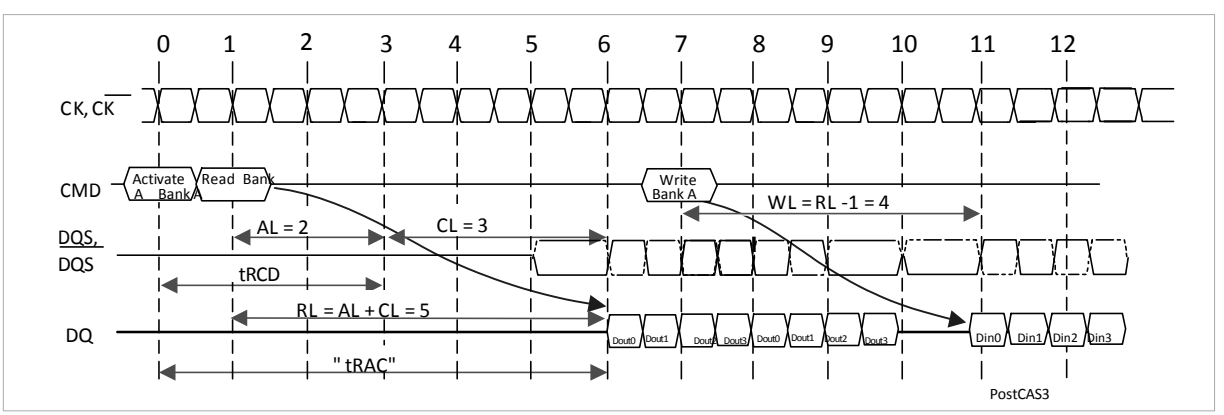

Read followed by a write to the same bank, Activate to Read delay > tRCDmin: AL = 1, CL = 3, RL = 4, WL = 3, BL = 4

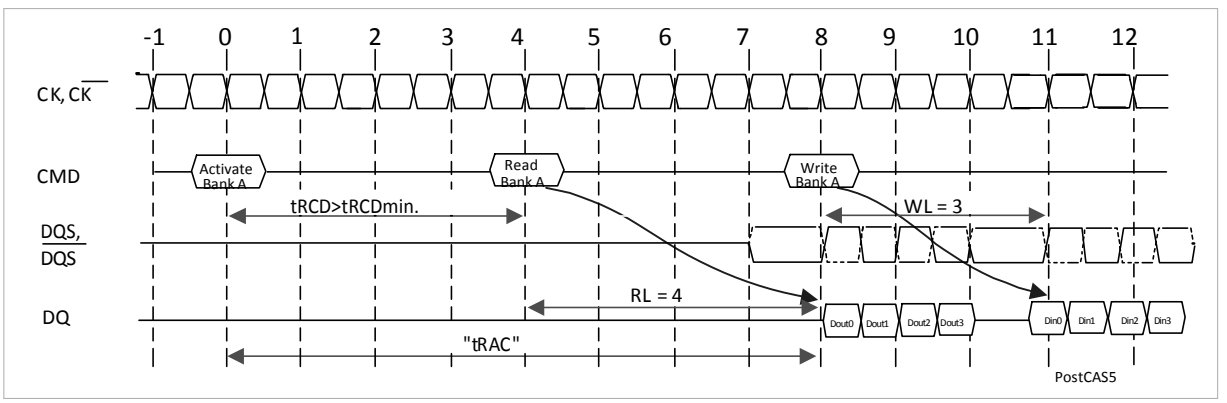

Burst Mode Operation

Burst mode operation is used to provide a constant flow of data to memory locations (write cycle), or from memory locations (read cycle). The parameters that define how the burst mode will operate are burst sequence and burst length.

The DDR2 SDRAM supports 4 bit and 8 bit burst modes only. For 8 bit burst mode, full interleave address ordering is supported, however, sequential address ordering is nibble based for ease of implementation. The burst length is programmable and defined by the addresses A0 ~ A2 of the MRS. The burst type, either sequential or interleaved, is programmable and defined by the address bit 3 (A3) of the MRS. Seamless burst read or write operations are supported.

Interruption of a burst read or write operation is prohibited, when burst length = 4 is programmed. For burst interruption of a read or write burst when burst length = 8 is used, see the "Burst Interruption" section of this datasheet. A Burst Stop command is not supported on DDR2 SDRAM devices.

Burst Length and Sequence

Burst Length	Starting Address (A2 A1 A0)	Sequential Addressing (decimal)	Interleave Addressing (decimal)
4	x 0 0	0, 1, 2, 3	0, 1, 2, 3
	x 0 1	1, 2, 3, 0	1, 0, 3, 2
	x 1 0	2, 3, 0, 1	2, 3, 0, 1
	x 1 1	3, 0, 1, 2	3, 2, 1, 0
8	0 0 0	0, 1, 2, 3, 4, 5, 6, 7	0, 1, 2, 3, 4, 5, 6, 7
	0 0 1	1, 2, 3, 0, 5, 6, 7, 4	1, 0, 3, 2, 5, 4, 7, 6
	0 1 0	2, 3, 0, 1, 6, 7, 4, 5	2, 3, 0, 1, 6, 7, 4, 5
	0 1 1	3, 0, 1, 2, 7, 4, 5, 6	3, 2, 1, 0, 7, 6, 5, 4
	1 0 0	4, 5, 6, 7, 0, 1, 2, 3	4, 5, 6, 7, 0, 1, 2, 3
	1 0 1	5, 6, 7, 4, 1, 2, 3, 0	5, 4, 7, 6, 1, 0, 3, 2
	1 1 0	6, 7, 4, 5, 2, 3, 0, 1	6, 7, 4, 5, 2, 3, 0, 1
	1 1 1	7, 4, 5, 6, 3, 0, 1, 2	7, 6, 5, 4, 3, 2, 1, 0

Note: 1) Page length is a function of I/O organization and column addressing.
2) Order of burst access for sequential addressing is "nibble-based" and therefore different from SDR or DDR components.

Burst Read Command

The Burst Read command is initiated by having $\overline{CS}$ and $\overline{CAS}$ low while holding $\overline{RAS}$ and $\overline{WE}$ high at the rising edge of the clock. The address inputs determine the starting column address for the burst. The delay from the start of the command until the data from the first cell appears on the outputs is equal to the value of the read latency (RL). The data strobe output (DQS) is driven low one clock cycle before valid data (DQ) is driven onto the data bus. The first bit of the burst is synchronized with the rising edge of the data strobe (DQS). Each sub- sequent data-out appears on the DQ pin in phase with the DQS signal in a source synchronous manner. The RL is equal to an additive latency (AL) plus CAS latency (CL). The CL is defined by the Mode Register Set (MRS). The AL is defined by the Extended Mode Register Set (EMRS).

Basic Burst Read Timing

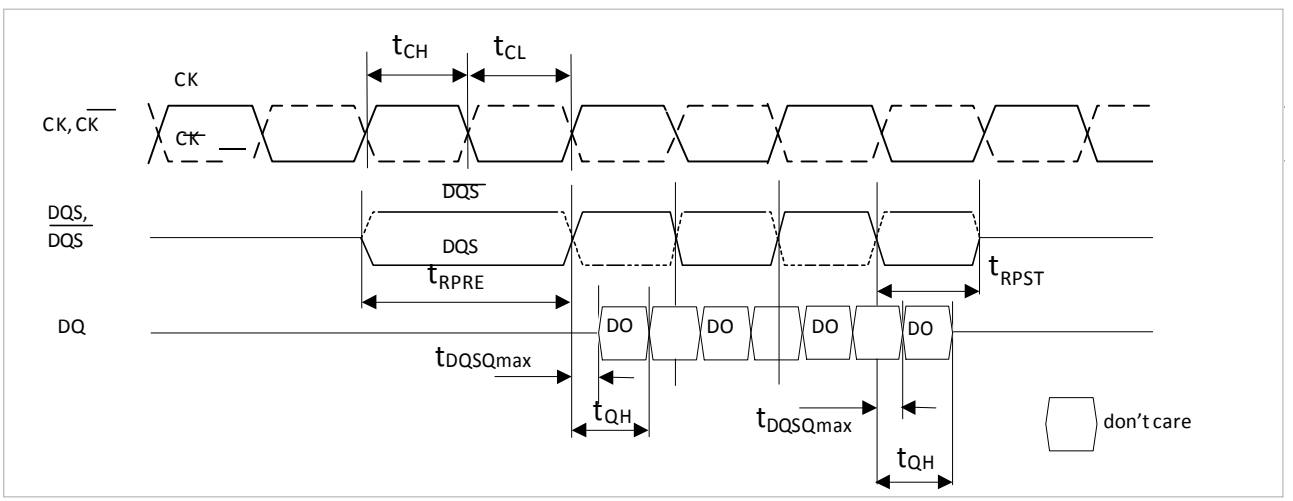

Burst Read Operation: RL = 5 (AL = 2, CL = 3, BL = 4)

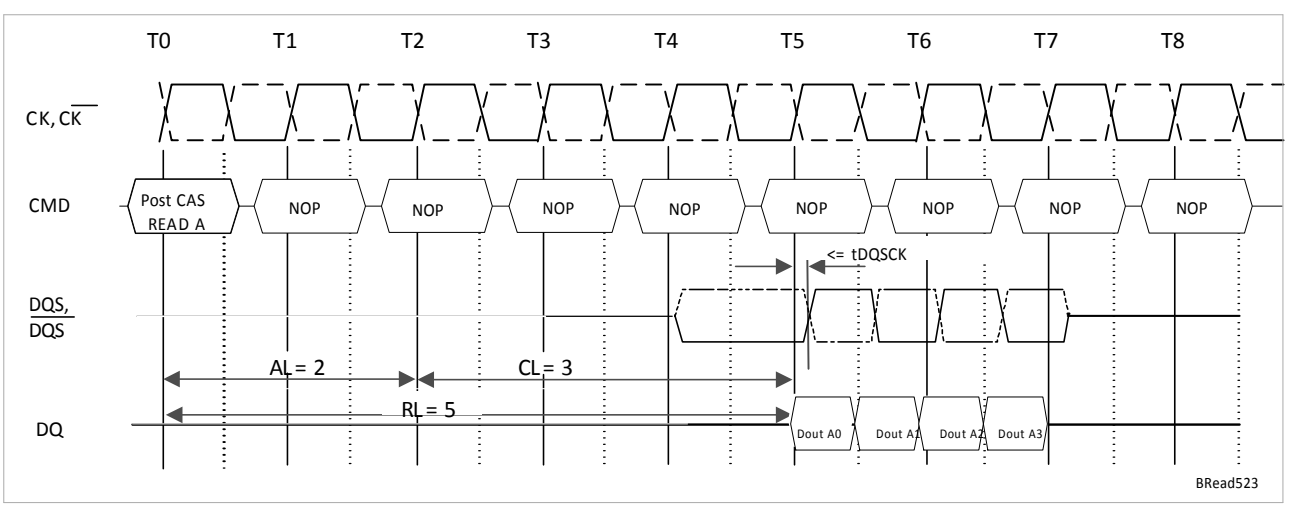

Burst Read Operation: RL = 3 (AL = 0, CL = 3, BL = 8)

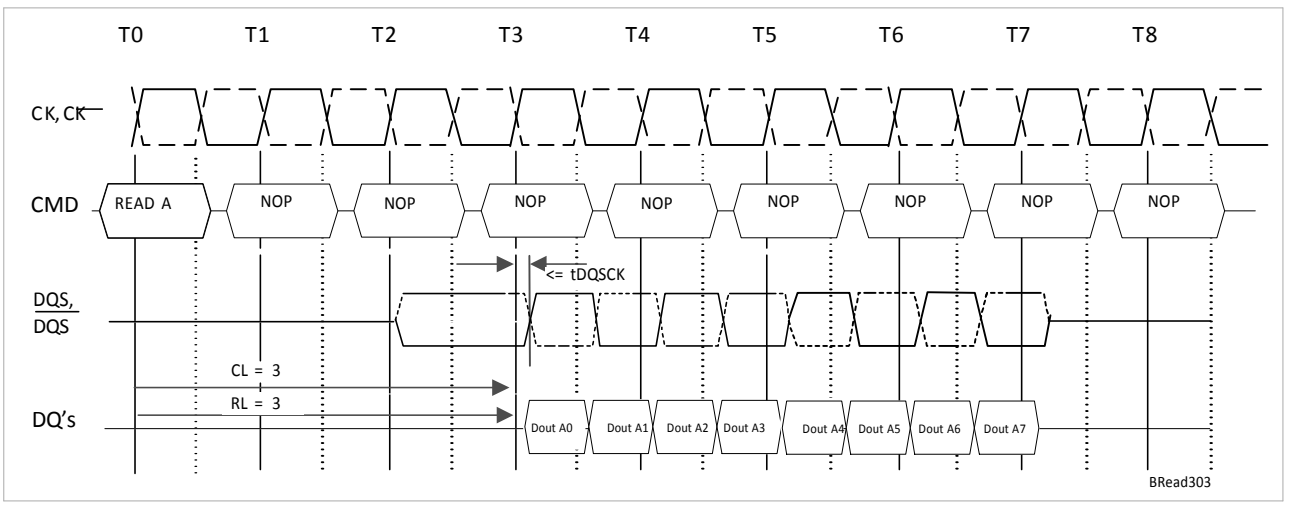

BurstRead followed by Burst Write : RL = 5, WL = (RL-1) = 4, BL = 4

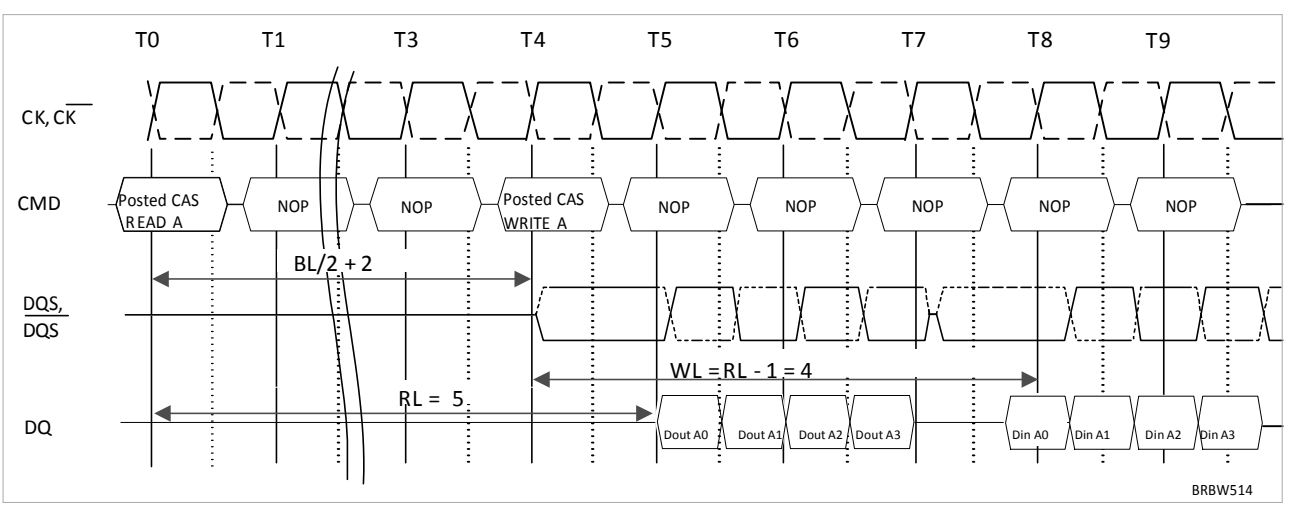

The minimum time from the burst read command to the burst write command is defined by a read-to-write turn-around time, which is BL/2 + 2 clocks.

Seamless Burst Read Operation : RL = 5, AL = 2, CL = 3, BL = 4

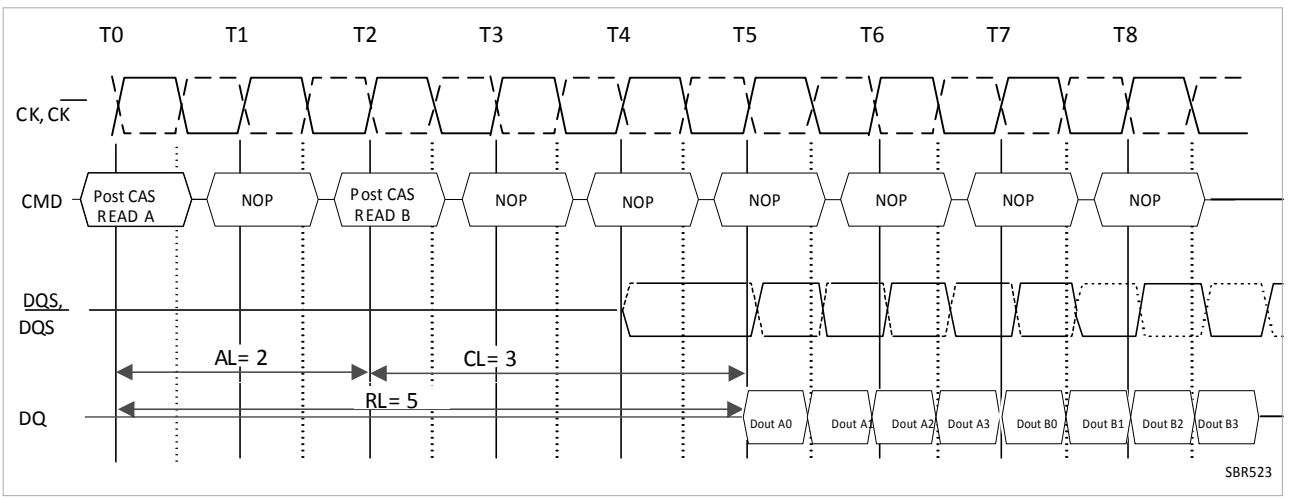

The seamless burst read operation is supported by enabling a read command at every BL / 2 number of clocks. This operation is allowed regardless of same or different banks as long as the banks are activated.

Seamless Burst Read Operation : RL = 3, AL = 0, CL = 3, BL = 8 (non-interrupting)

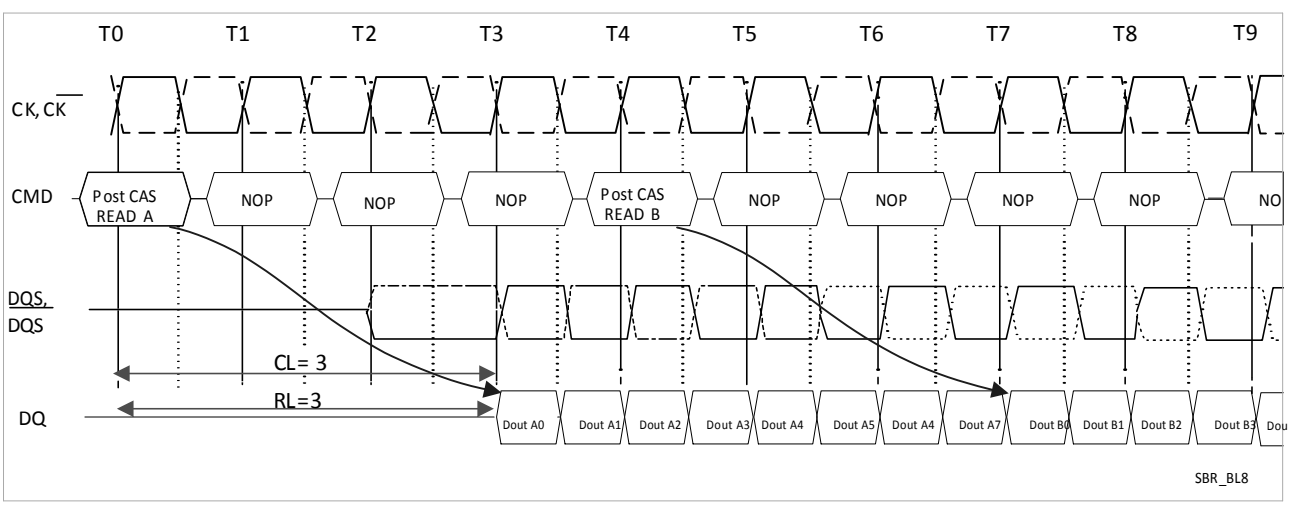

The seamless, non-interrupting 8-bit burst read operation is supported by enabling a read command at every BL / 2 number of clocks. This operation is allowed regardless of same or different banks as long as the banks are activated.

Burst Write Command

The Burst Write command is initiated by having $\overline{CS}$, $\overline{CAS}$ and $\overline{WE}$ low while holding $\overline{RAS}$ high at the rising edge of the clock. The address inputs determine the starting column address. Write latency (WL) is defined by a read latency (RL) minus one and is equal to (AL + CL -1). A data strobe signal (DQS) should be driven low (preamble) one clock prior to the WL. The first data bit of the burst cycle must be applied to the DQ pins at the first rising edge of the DQS following the preamble. The tDQSS specification must be satisfied for write cycles. The subsequent burst bit data are issued on successive edges of the DQS until the burst length is completed. When the burst has finished, any additional data supplied to the DQ pins will be ignored. The DQ signal is ignored after the burst write operation is complete. The time from the completion of the burst write to bank precharge is named "write recovery time" (tWR) and is the time needed to store the write data into the memory array. tWR is an analog timing parameter (see the AC table in this specification) and is not the programmed value for WR in the MRS.

Basic Burst Write Timing

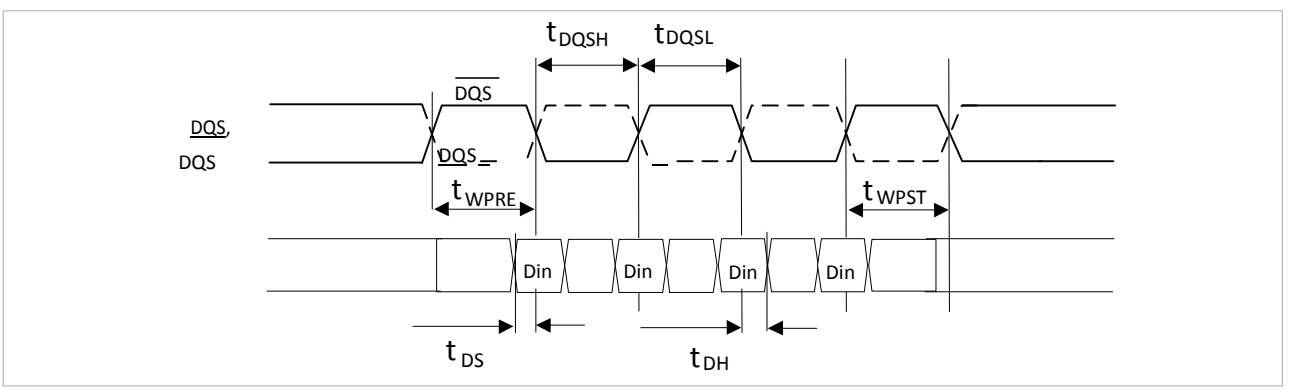

Burst Write Operation : RL = 5 (AL = 2, CL = 3), WL = 4, BL = 4

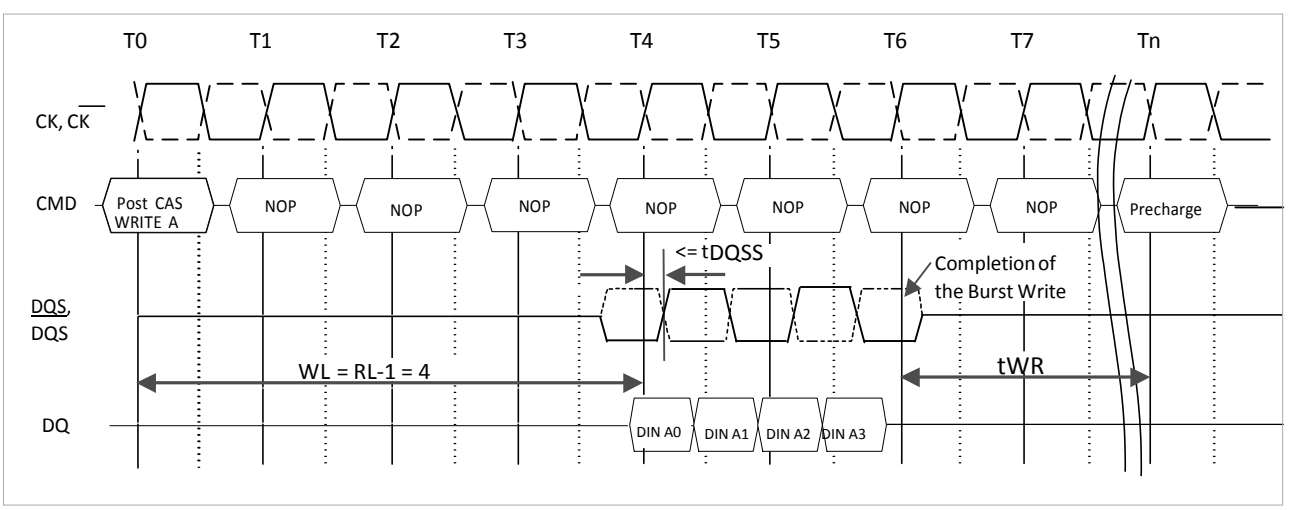

Burst Write Operation : RL = 3 (AL = 0, CL = 3), WL = 2, BL = 4

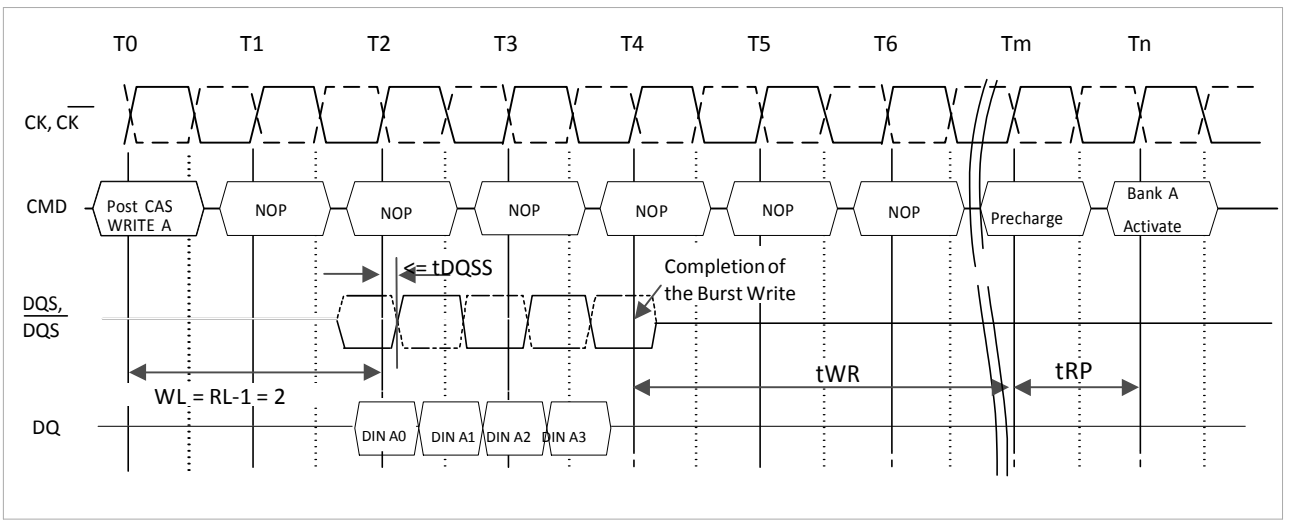

Burst Write followed by Burst Read : RL = 5 (AL = 2, CL = 3), WL = 4, tWTR = 2, BL = 4

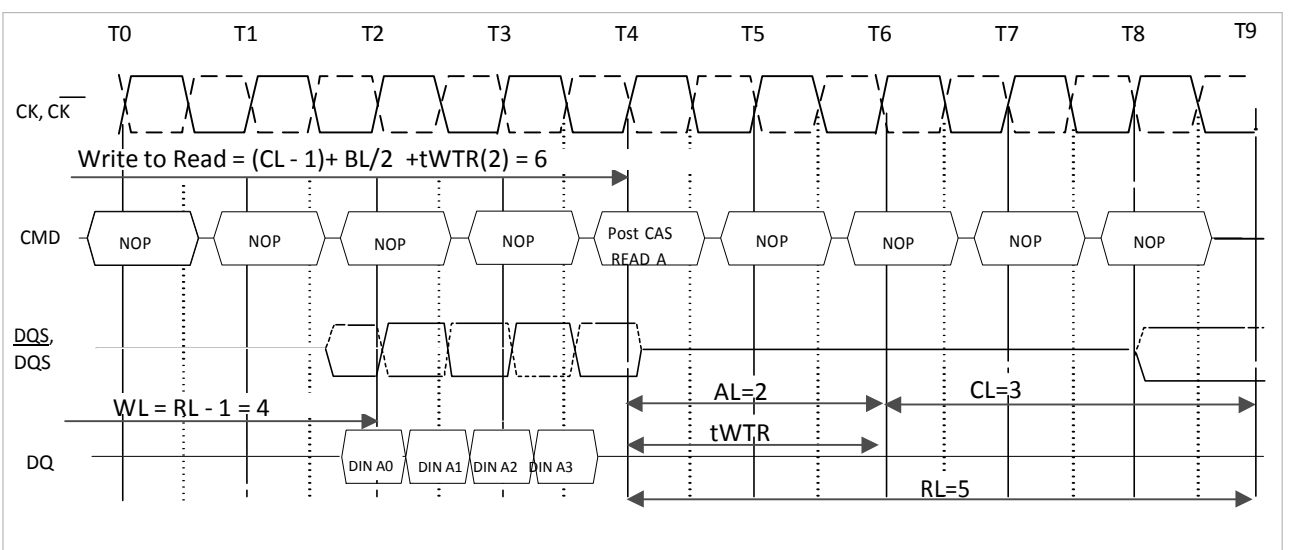

The minimum number of clocks from the burst write command to the burst read command is

(CL - 1) +BL/2 + tWTR

where tWTR is the write-to-read turn-around time tWTR expressed in clock cycles. The tWTR is not a write recovery time (tWR) but the time required to transfer 4 bit write data from the input buffer into sense amplifiers in the array.

Seamless Burst Write Operation: RL=5, WL=4, BL=4

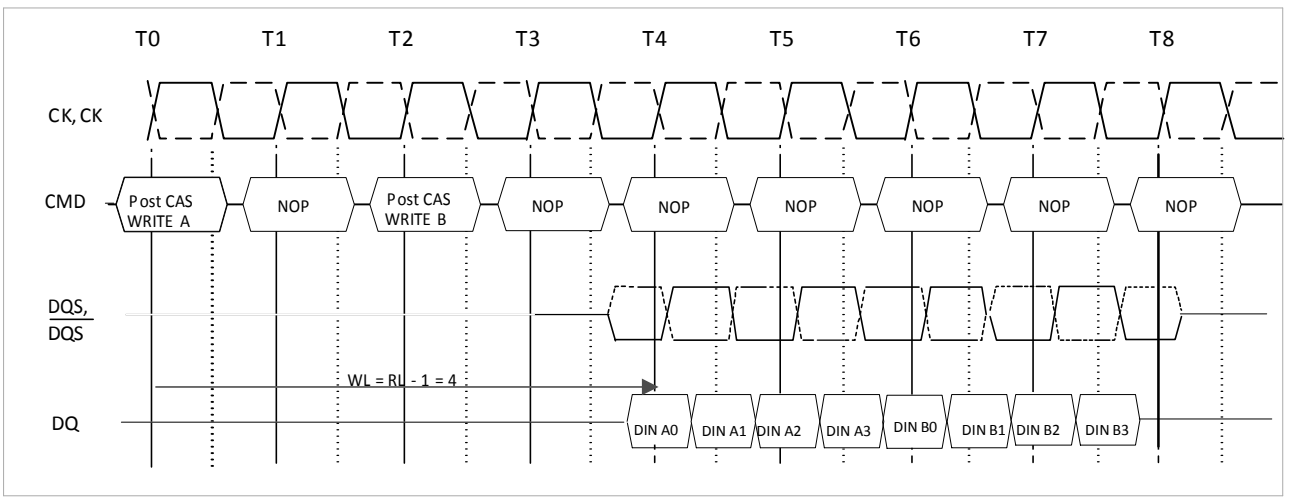

The seamless burst write operation is supported by enabling a write command every BL / 2 number of clocks. This operation is allowed regardless of same or different banks as long as the banks are activated.

Seamless Burst Write Operation: RL=3, WL=2, BL=8, non-interrupting

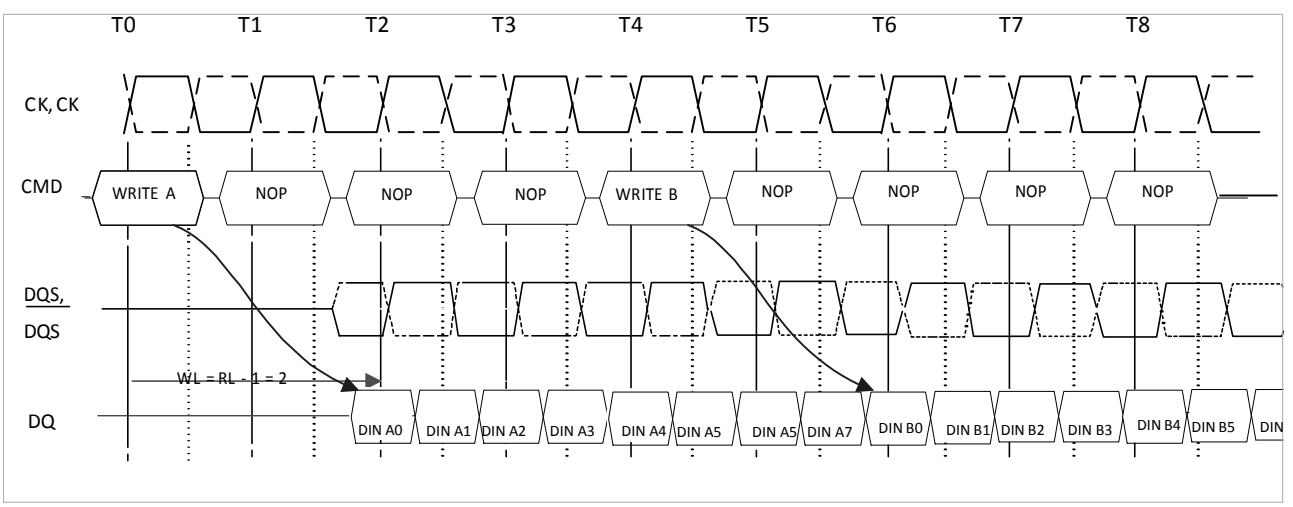

The seamless, non-interrupting 8-bit burst write operation is supported by enabling a write command at every BL / 2 number of clocks. This operation is allowed regardless of same or different banks as long as the banks are activated.

Write Data Mask

Two write data mask inputs (LDM, UDM) are supported on x16 components of DDR2 SDRAMs, consistent with the implementation on DDR SDRAMs. It has identical timings on write operations as the data bits, and though used in a uni-directional manner, is internally loaded identically to data bits to insure matched system timing. Data mask is not used during read cycles. If DM is high during a write burst coincident with the write data, the write data bit is not written to the memory.

Write Data Mask Timing

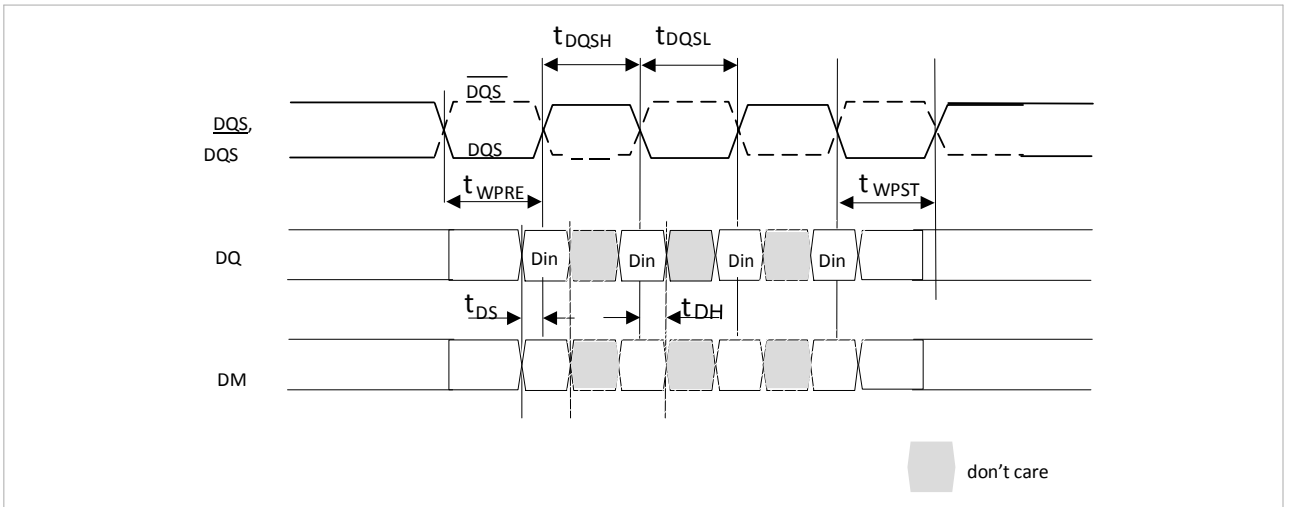

Burst Write Operation with Data Mask : RL = 3 (AL = 0, CL = 3), WL = 2, tWR = 3 , BL = 4

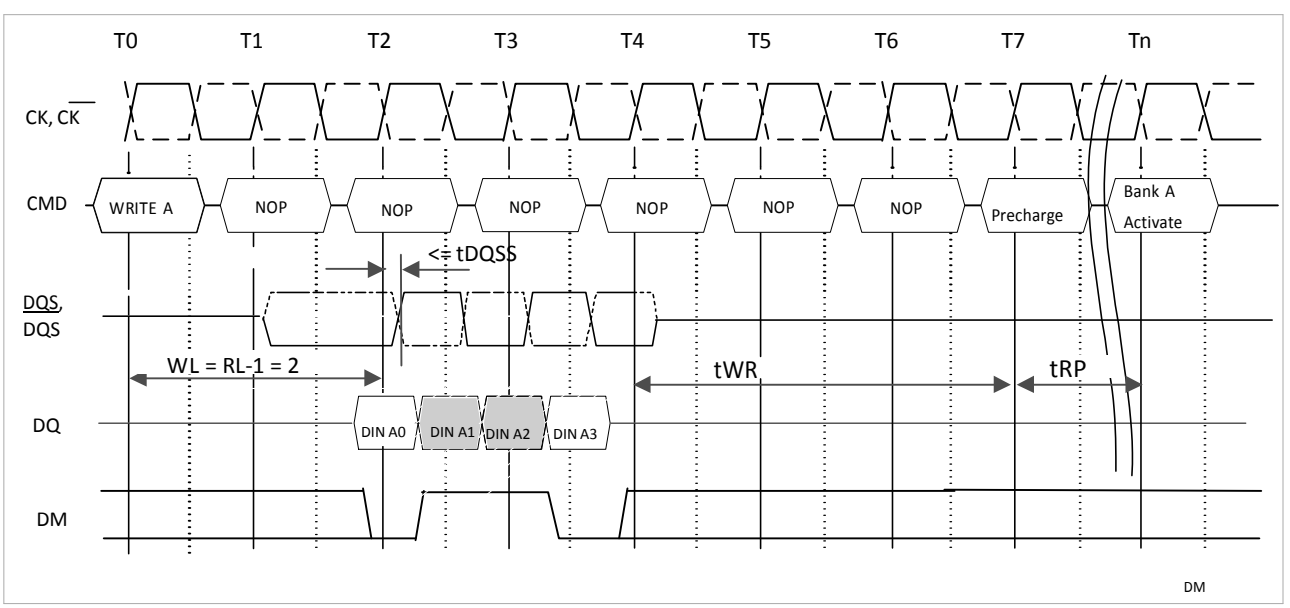

Burst Interruption

Interruption of a read or write burst is prohibited for burst length of 4 and only allowed for burst length of 8 under the following conditions:

1. A Read Burst of 8 can only be interrupted by another Read command. Read burst interruption by a Write or Precharge Command is prohibited.
2. A Write Burst of 8 can only be interrupted by another Write command. Write burst interruption by a Read or Precharge Command is prohibited.
3. Read burst interrupt must occur exactly two clocks after the previous Read command. Any other Read burst interrupt timings are prohibited.
4. Write burst interrupt must occur exactly two clocks after the previous Write command. Any other Read burst interrupt timings are prohibited.
5. Read or Write burst interruption is allowed to any bank inside the DDR2 SDRAM.
6. Read or Write burst with Auto-Precharge enabled is not allowed to be interrupted.
7. Read burst interruption is allowed by a Read with Auto-Precharge command.
8. Write burst interruption is allowed by a Write with Auto-Precharge command.
9. All command timings are referenced to burst length set in the mode register. They are not referenced to the actual burst. For example, Minimum Read to Precharge timing is AL + BL/2 where BL is the burst length set in the mode register and not the actual burst (which is shorter because of interrupt). Minimum Write to Precharge timing is WL + BL/ 2 + tWR, where tWR starts with the rising clock after the un-interrupted burst end and not form the end of the actual burst end.

Read Burst Interrupt Timing Example : (CL = 3, AL = 0, RL = 3, BL = 8)

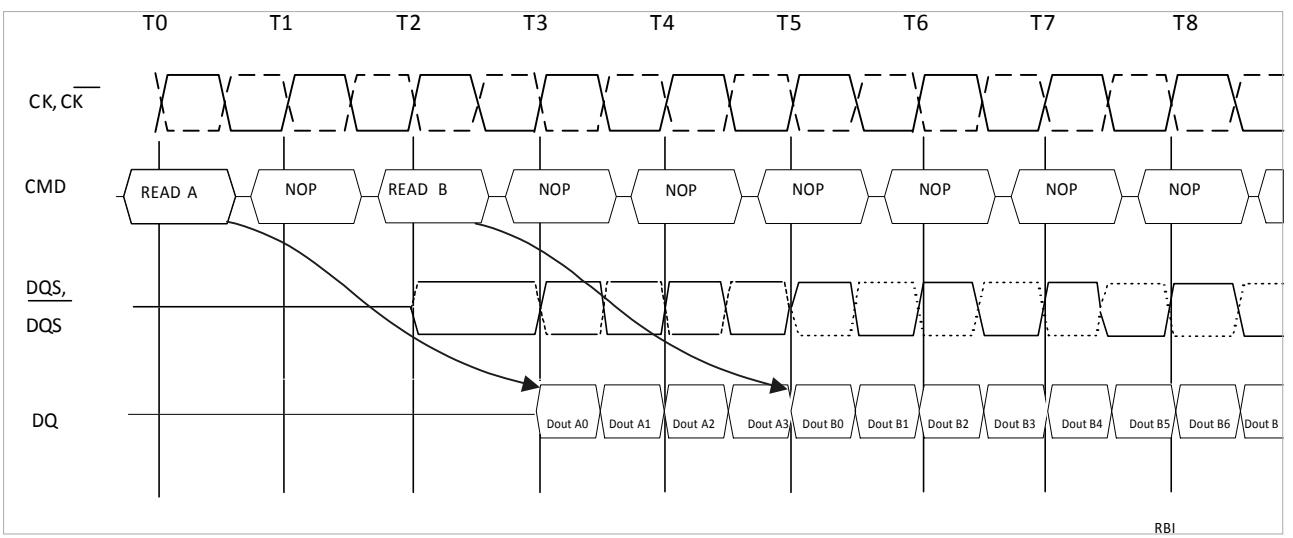

Write Bburst Interrupt Timing Example : (CL = 3, AL = 0, WL = 2, BL = 8)

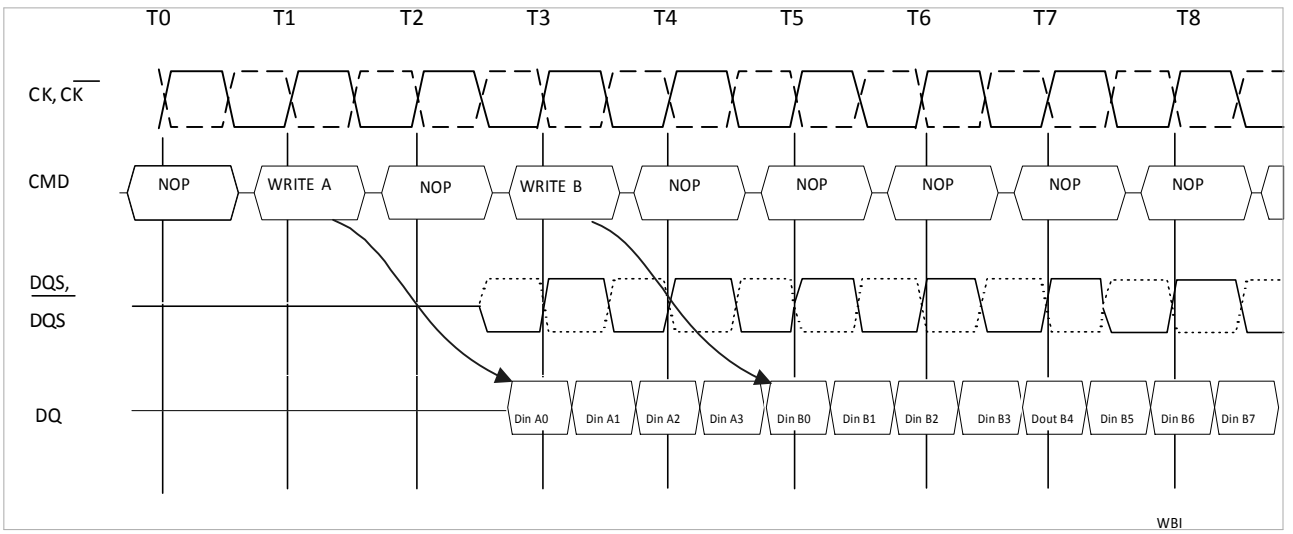

Precharge Command

The Precharge Command is used to precharge or close a bank that has been activated. The Precharge Command is triggered when CS, RAS and WE are low and CAS is high at the rising edge of the clock. The Pre-charge Command can be used to precharge each bank independently or all banks simultaneously. Four address bits A10, BA2, BA1 and BA0 are used to define which bank to precharge when the command is issued.

Bank Selection for Precharge by Address Bits

A10	BA0	BA1	BA2	Precharge Bank(s)
LOW	LOW	LOW	LOW	Bank 0 only
LOW	HIGH	LOW	LOW	Bank 1 only
LOW	LOW	HIGH	LOW	Bank 2 only
LOW	HIGH	HIGH	LOW	Bank 3 only
LOW	LOW	LOW	HIGH	Bank 4 only

A10	BA0	BA1	BA2	Precharge Bank(s)
LOW	HIGH	LOW	HIGH	Bank 5 only
LOW	LOW	HIGH	HIGH	Bank 6 only
LOW	HIGH	HIGH	HIGH	Bank 7 only
HIGH	Don't Care	Don't Care	Don't Care	All Banks

Burst Read Operation Followed by a Precharge

The following rules apply as long as the tRTP timing parameter - Internal Read to Precharge Command delay time - is less or equal two clocks, which is the case for operating frequencies less or equal 266 MHz (DDR2 400 and 533 speed sorts):

Minimum Read to Precharge command spacing to the same bank = AL + BL/2 clocks. For the earliest possible precharge, the precharge command may be issued on the rising edge which is “Additive Latency (AL) + BL/2 clocks” after a Read Command, as long as the minimum tRAS timing is satisfied.

A new bank active command may be issued to the same bank if the following two conditions are satisfied simultaneously:

(1) The RAS precharge time (tRP) has been satisfied from the clock at which the precharge begins.

(2) The RAS cycle time (tRCmin) from the previous bank activation has been satisfied.

For operating frequencies higher than 266 MHz, tRTP becomes > 2 clocks and one additional clock cycle has to be added for the minimum Read to Precharge command spacing, which now becomes AL + BL/2 + 1 clocks.

Burst Read Operation Followed by Precharge: RL = 4 (AL = 1, CL = 3), BL = 4, tRTP <= 2 clocks

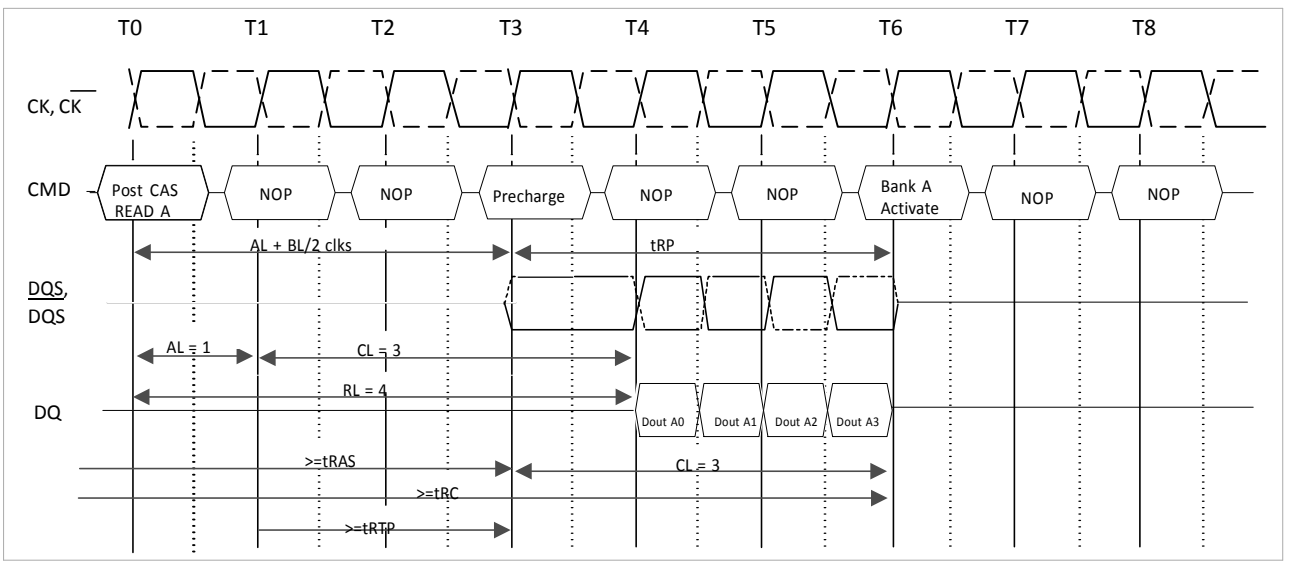

Burst Read Operation Followed by Precharge: RL = 4 (AL = 1, CL = 3), BL = 8, tRTP <= 2 clocks

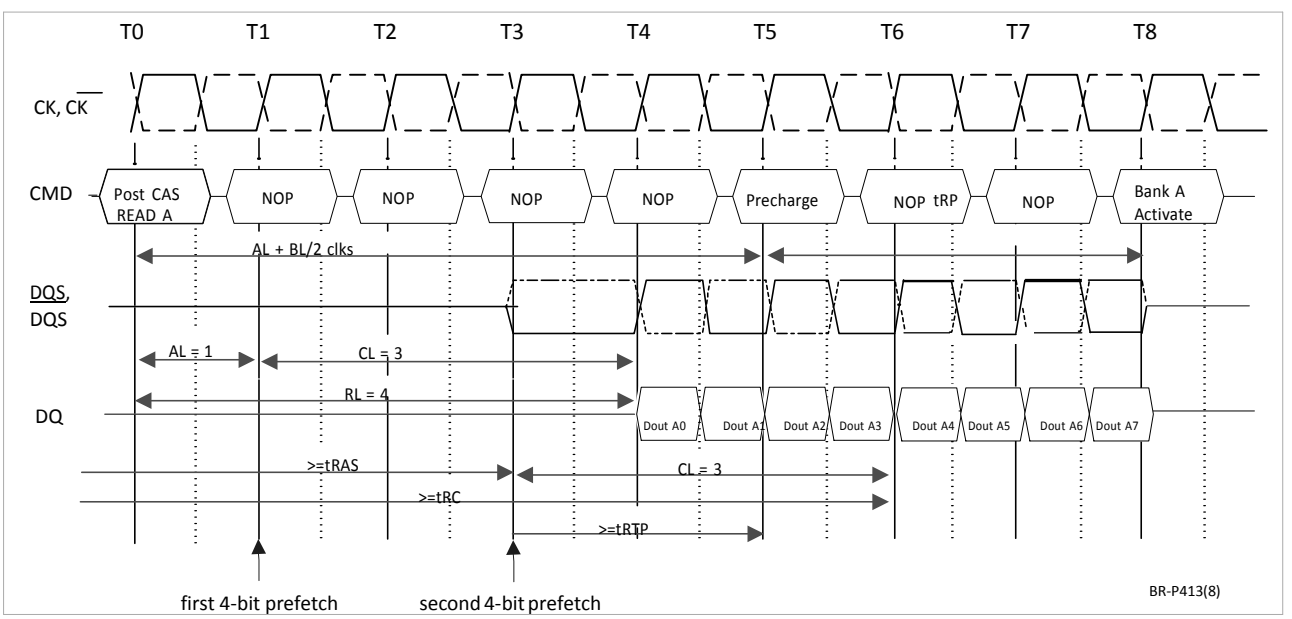

Burst Read operation Followed by Precharge: RL=5(AL=2, CL=3), BL=4, tRTP<=2 clocks

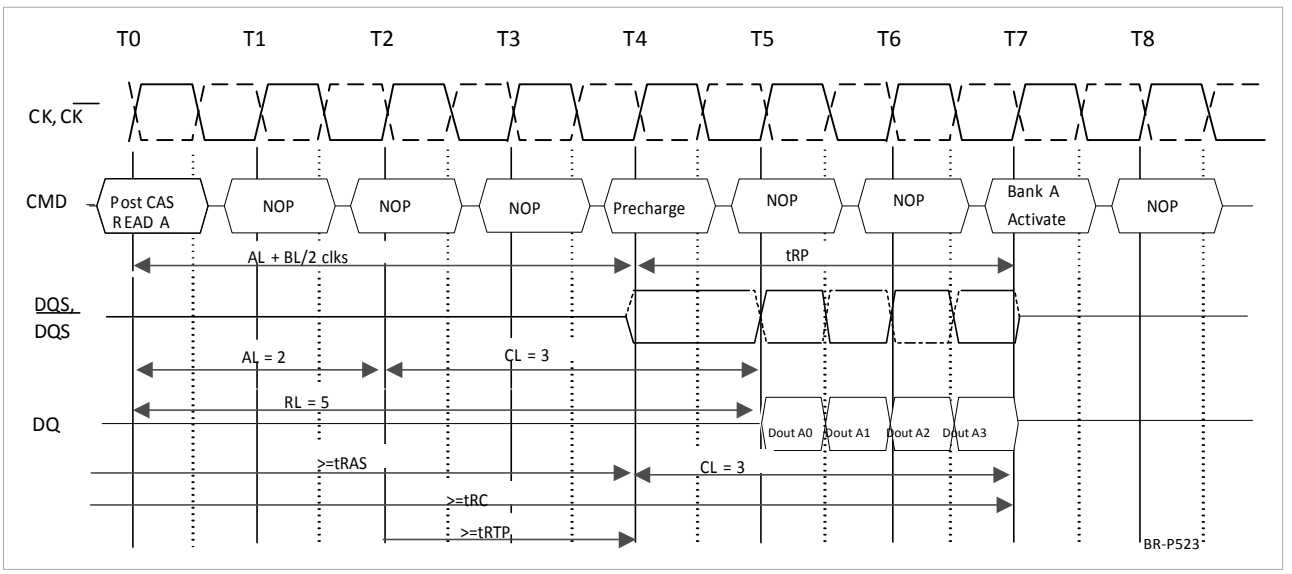

Burst Read operation Followed by Precharge: RL=6(AL=2, CL=4), BL=4, tRTP<=2 clocks

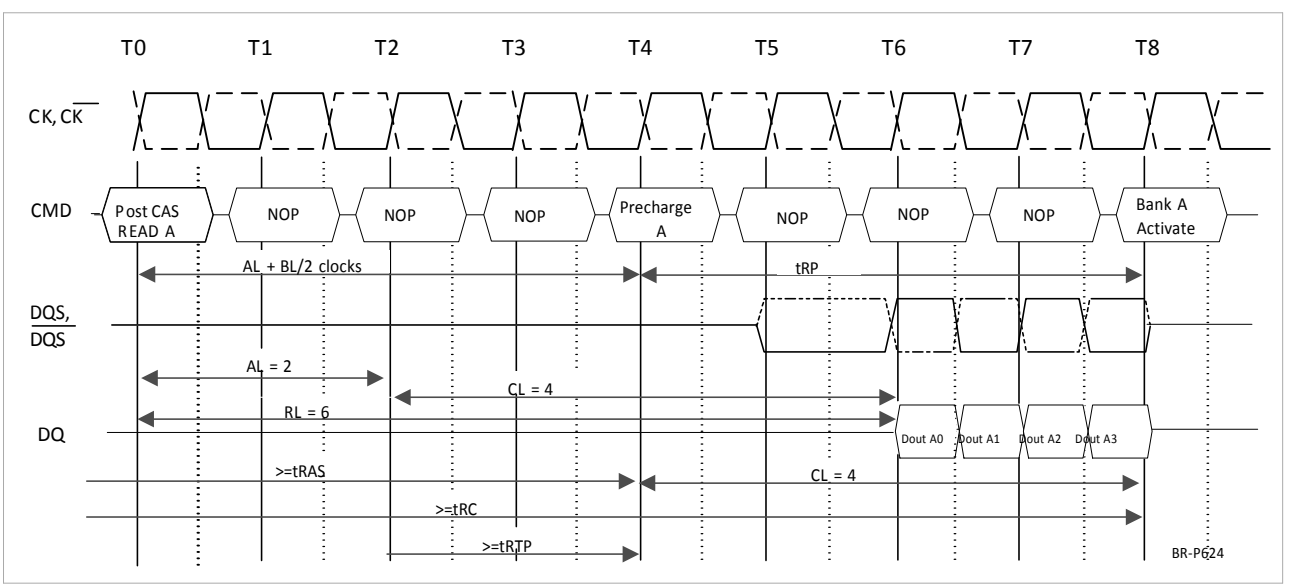

Burst Read Operation Followed by Precharge: RL=4, (AL=0, CL=4), BL=8, tRTP>2 clocks

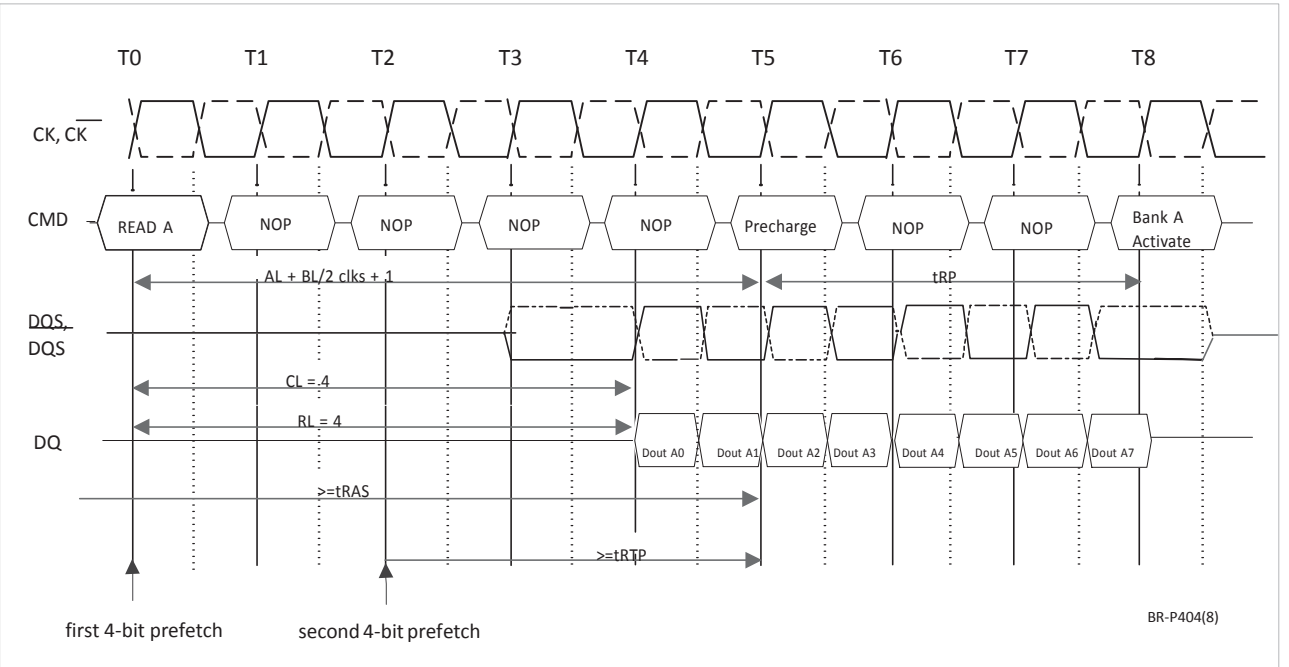

Burst Write followed by Precharge

Minimum Write to Precharge command spacing to the same bank = **WL + BL/2 + tWR**. For write cycles, a delay must be satisfied from the completion of the last burst write cycle until the Precharge command can be issued. This delay is known as a write recovery time (t WR) referenced from the completion of the burst write to the Precharge command. No Precharge command should be issued prior to the tWR delay, as DDR2 SDRAM does not support any burst interrupt by a Precharge command. tWR is an analog timing parameter (see the AC table in this datasheet) and is not the programmed value for tWR in the MRS.

Burst Write followed by Precharge : WL = (RL - 1) = 3, BL = 4, tWR = 3

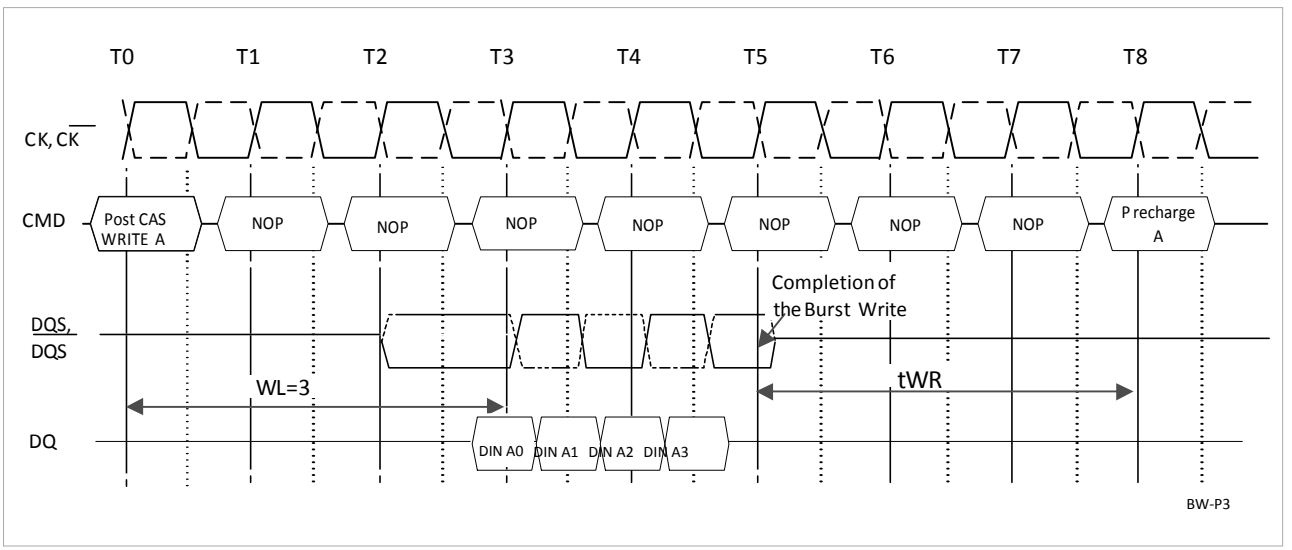

Burst Write followed by Precharge : WL = (RL - 1) = 4, BL = 4, tWR = 3

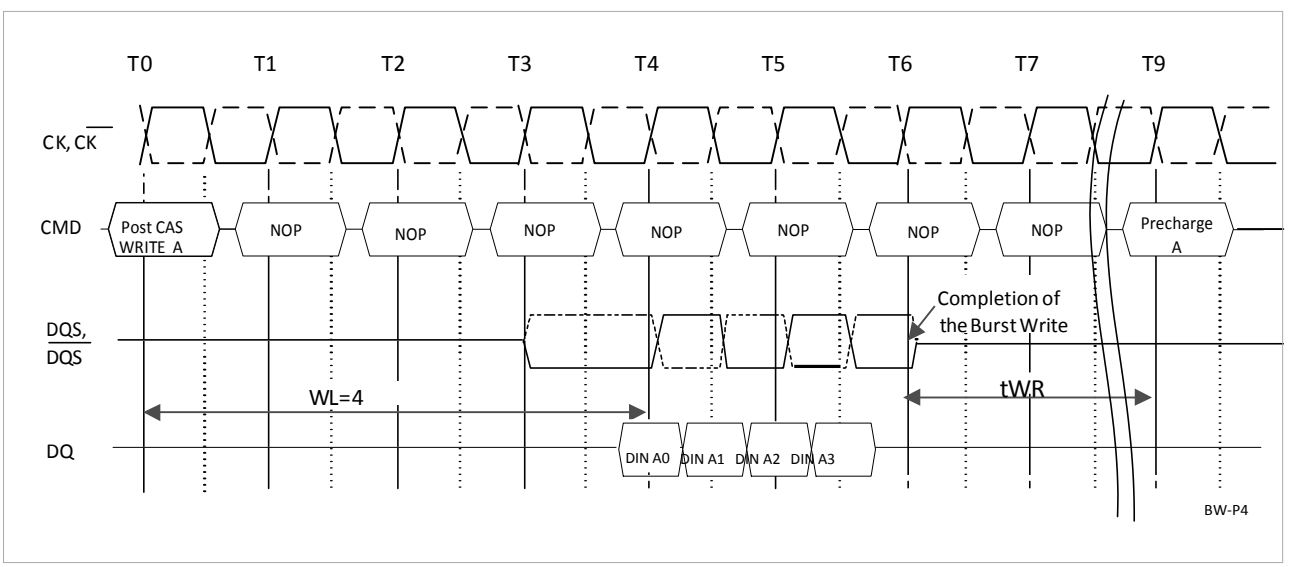

Auto-Precharge Operation

Before a new row in an active bank can be opened, the active bank mustt be precharged using either the Pre- charge Command or the Auto-Precharge function. When a Read or a Write Command is given to the DDR2 SDRAM, the CAS timing accepts one extra address, column address A10, to allow the active bank to automatically begin precharge at the earliest possible moment during the burst read or write cycle. If A10 is low when the Read or Write Command is issued, then normal Read or Write burst operation is executed and the bank remains active at the completion of the burst sequence. If A10 is high when the Read or Write Command is issued, then the Auto-Precharge function is enabled. During Auto-Precharge, a Read Command will execute as normal with the exception that the active bank will begin to precharge internally on the rising edge which is CAS Latency (CL) clock cycles before the end of the read burst. Auto-Precharge is also implemented for Write Commands. The precharge operation engaged by the Auto-Precharge command will not begin until the last data of the write burst sequence is properly stored in the memory array. This feature allows the pre- charge operation to be partially or completely hidden during burst read cycles (dependent upon CAS Latency) thus improving system performance for random data access. The RAS lockout circuit internally delays the Precharge operation until the array restore operation has been completed so that the Auto-Precharge command may be issued with any read or write command.

Burst Read with Auto-Precharge

If A10 is high when a Read Command is issued, the Read with Auto-Precharge function is engaged. The DDR2 SDRAM starts an Auto-Precharge operation on the rising edge which is (AL + BL/2) cycles later from the Read with AP command if tRAS(min) and tRTP are satisfied. If tRAS(min) is not satisfied at the edge, the start point of Auto-Precharge operation will be delayed until tRAS(min) is satisfied. If tRTP(min) is not satisfied at the edge, the start point of Auto-precharge operation will be delayed until tRTP(min) is satisfied.
In case the internal precharge is pushed out by tRTP, tRP starts at the point where the internal precharge happens (not at the next rising clock edge after this event). Sofor BL = 4 the minimum time from Read with Auto-Precharge to the next Activate command becomes AL + tRTP + tRP. For BL = 8 the time from Read with Auto-Precharge to the next Activate command is AL + 2 + tRTP + tRP. Note thatt both parameters tRTP and tRP have to be rounded up to the next integer value. In any event internal precharge does not start earlier than two clocks after the last t 4-bit prefetch.

A new bank active (command) may be issued to the same bank if the following two conditions are satisfied simultaneously:

(1) The $\overline{\text{RAS}}$ precharge time (tRP) has been satisfied from the clock at which the Auto-Precharge begins.

(2) The $\overline{\text{RAS}}$ cycle time (tRC) from the previous bank activation has been satisfied.

Burst Read with Auto-Precharge followed by an activation to the Same Bank (tRC Limit) RL = 5 (AL = 2, CL = 3), BL = 4, tRTP <= 2 clocks

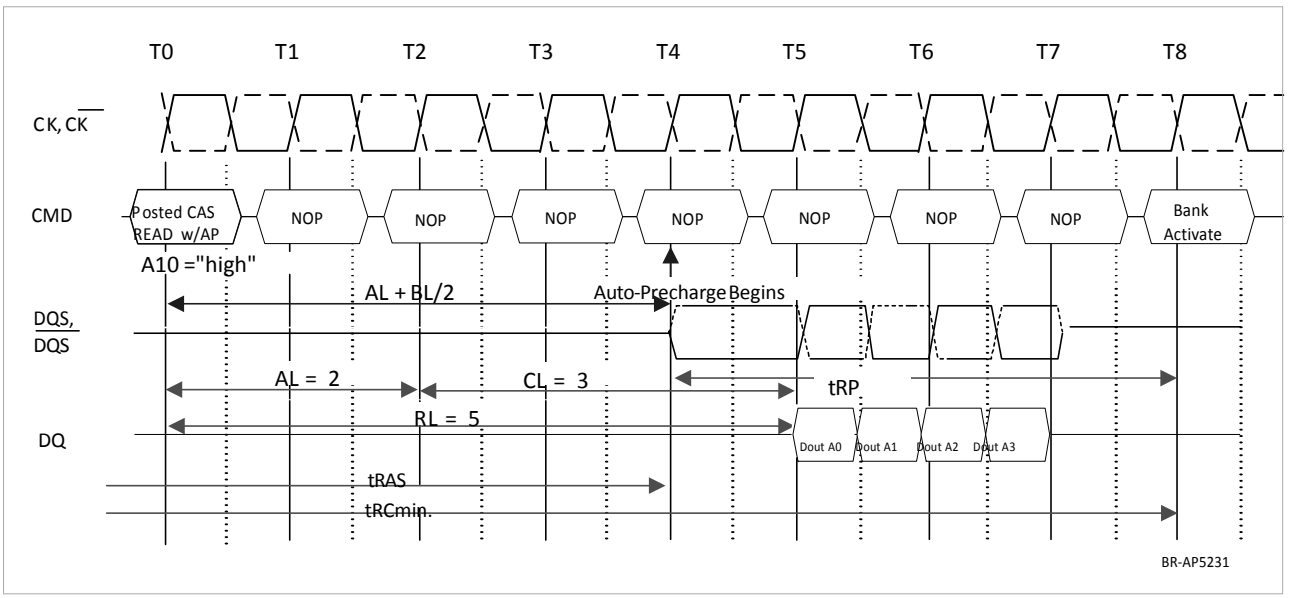

Burst Read with Auto-Precharge followed by an Activation to the Same Bank (tRAS Limit): RL = 5 (AL = 2, CL = 3), BL = 4, tRTP <= 2 clocks

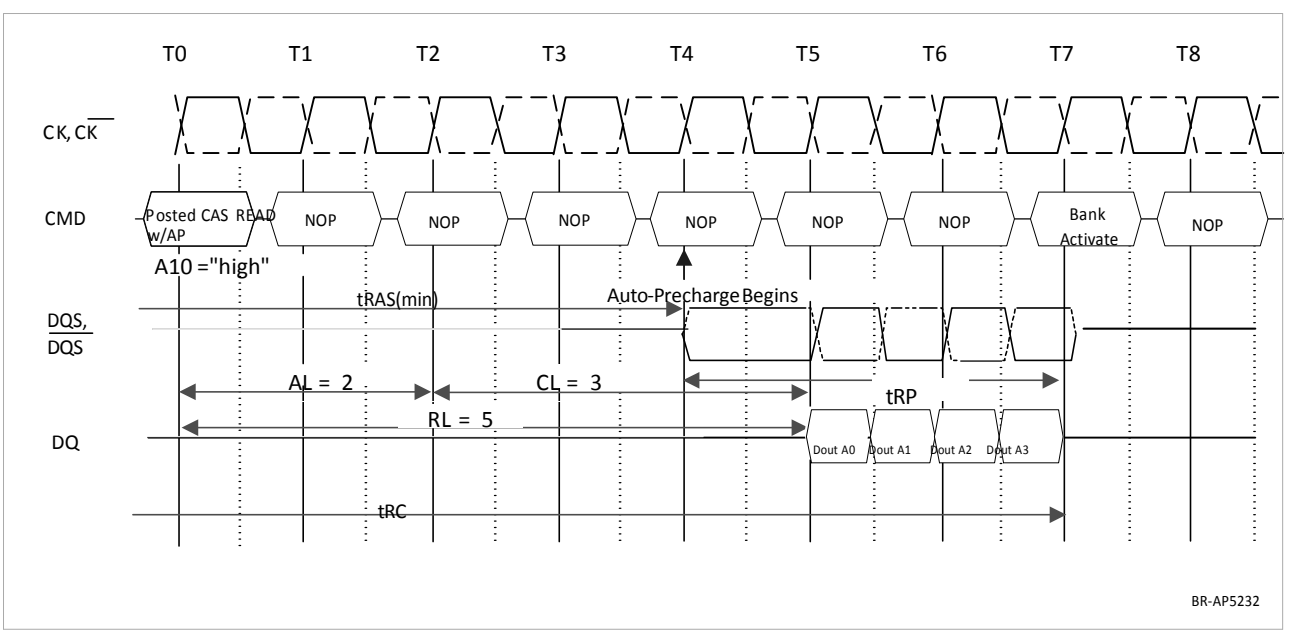

Burst Read with Auto-Precharge followed by an Activation to the Same Bank: RL=4(AL=1,

CL=3), BL=8, tRTP<=2 clocks

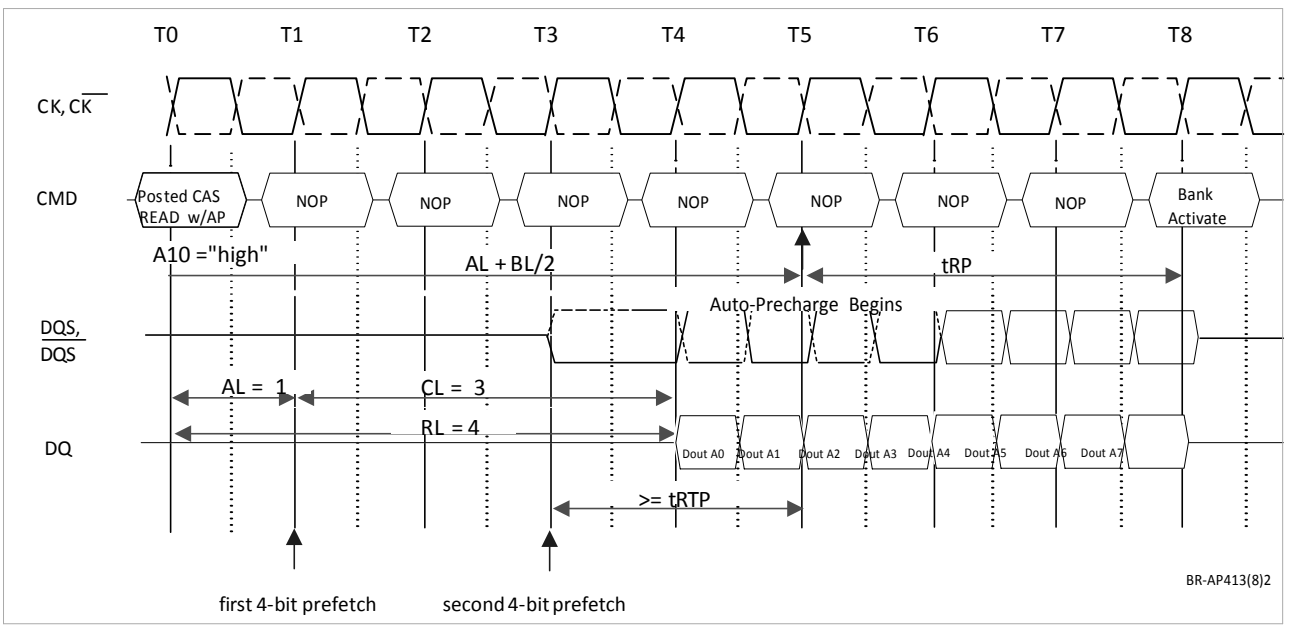

Burst Read with Auto-Precharge followed by an Activation to the Same Bank:

RL=4(AL=1, CL=3), BL=4, tRTP>2 clocks

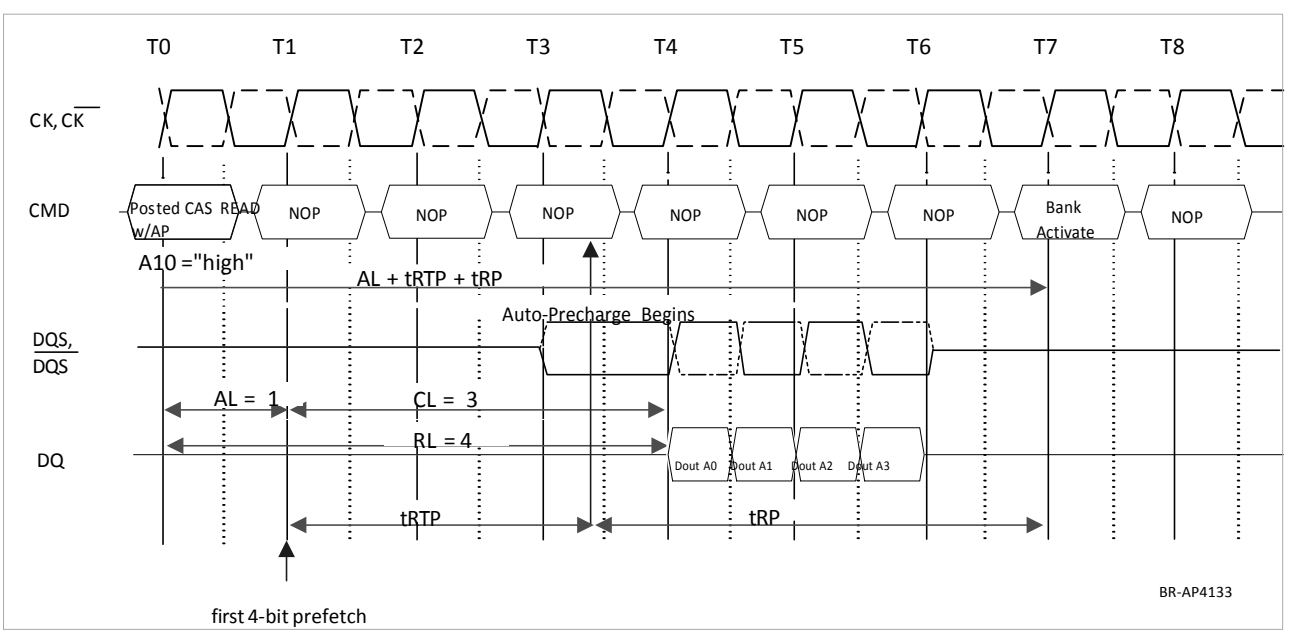

Burst Write with Auto-Precharge

If A10 is high when a Write Command is issued, the Write with Auto-Precharge function is engaged. The DDR2 SDRAM automatically begins precharge operation after the completion of the write burst plus the write recovery time delay (WR), programmed in the MRS register, as long as tRAS is satisfied. The bank undergoing Auto-Precharge from the completion of the write burst may be reactivated if the following two conditions are satisfied.

(1) The last data-in to bank activate delay time (tDAL = WR + tRP) has been satisfied.

(2) The RAS cycle time (tRC) from the previous bank activation has been satisfied.

In DDR2 SDRAMs the write recovery time delay (WR) has to be programmed into the MRS mode register. As long as the analog tWR timing parameter is not violated, WR can be programmed between 2 and 6 clock cycles. Minimum Write to Activate command spacing to the same bank = WL + BL/2 + tDAL.

Examples:

Burst Write with Auto-Precharge (tRC Limit) : WL = 2, tDAL = 6 (WR = 3, tRP = 3) , BL = 4

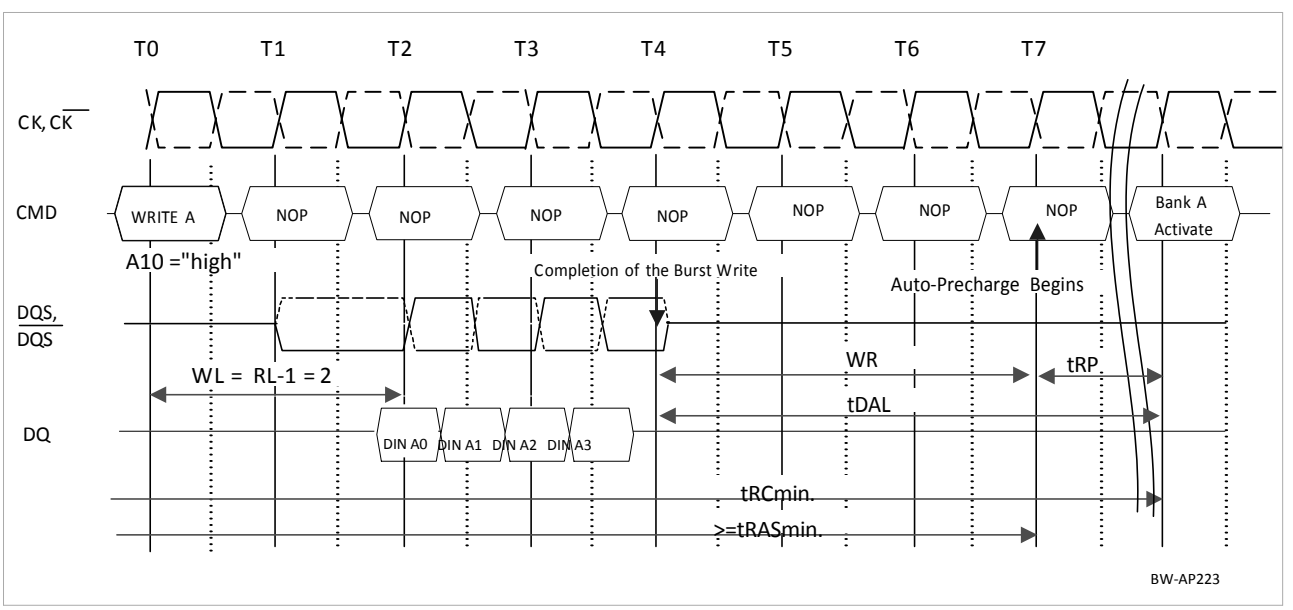

Burst Write with Auto-Precharge (WR+tRP Limit): WL=4, tDAL=6(WR=3, tRP=3), BL=4

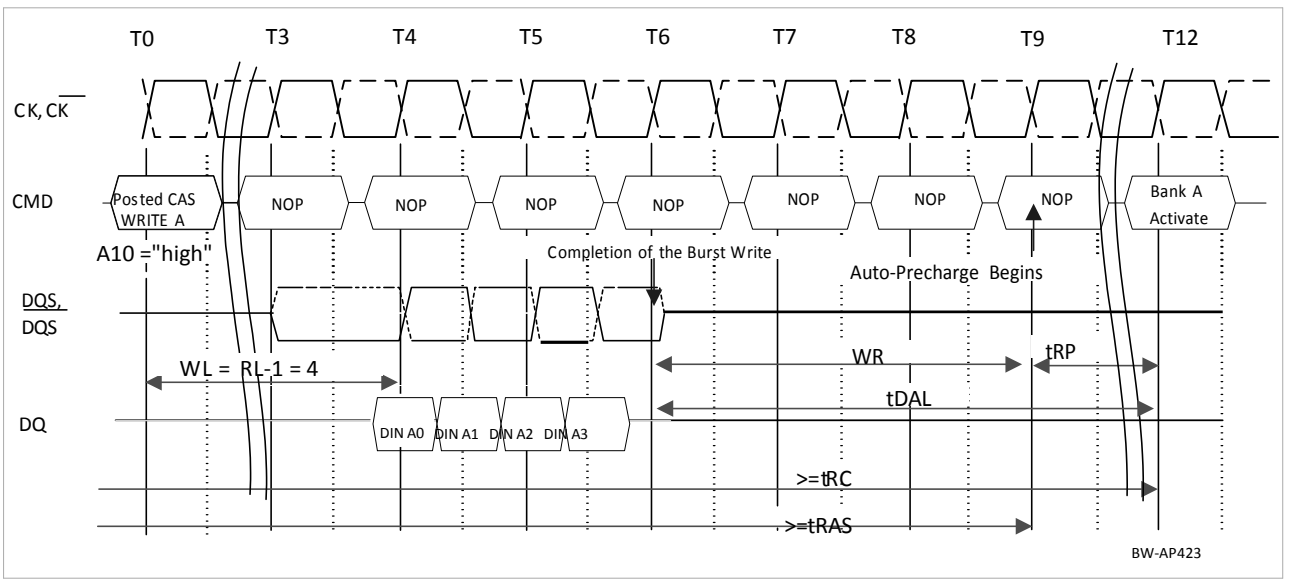

Concurrent Auto-Precharge

DDR2 devices support the "concurrent Auto-Precharge" feature. A read with Auto-Precharge enabled, or a write with Auto-Precharge enabled, may be followed by any command to the other bank, as long as that command does not interrupt the read or write data transfer, and all other related limitations (e.g. contention between Read data and Write data must be avoided externally and on the internal data bus.

The minimum delay from a read or write command with Auto-Precharge enabled, to a command to a different bank, is summarized in the table below. As defined, the WL = RL - 1 for DDR2 devices which allows the command gap and corresponding data gaps to be minimized.

From Command	To Command (different bank, non-interrupting command)	Minimum Delay with Concurrent Auto-Precharge Support	Units
WRITE w/AP	Read or Read w/AP	(CL -1) + (BL/2) + tWTR	tCK
	Write or Write w/AP	BL/2	tCK
	Precharge or Activate	1	tCK
Read w/AP	Read or Read w/AP	BL/2	tCK
	Write or Write w/AP	BL/2 + 2	tCK
	Precharge or Activate	1	tCK

Refresh

SDRAMs require a refresh of all rows in any rolling 64 ms interval. Each refresh is generated in one of two ways : by an explicit Auto-Refresh command, or by an internally timed event in Self-Refresh mode. Dividing the number of device rows into the rolling 64 ms interval defined the average refresh interval tREFI, which is a guideline to controllers for distributed refresh timing. For example, a 512Mbit DDR2 SDRAM has 8192 rows resulting in a tREFI of 7,8 µs.

Auto-Refresh Command

Auto-Refresh is used during normal operation of the DDR2 SDRAMs. This command is non-persistent, so it must be issued each time a refresh is required. The refresh addressing is generated by the internal refresh controller. This makes the address bits ”Don’t Care” during an Auto-Refresh command. The DDR2 SDRAM requires Auto-Refresh cycles at an average periodic interval of tREFI (maximum).

When $\overline{CS}$, $\overline{RAS}$ and $\overline{CAS}$ are held low and $\overline{WE}$ high at the rising edge of the clock, the chip enters the Auto- Refresh mode. All banks of the SDRAM must be precharged and idle for a minimum of the Precharge time (t_{RP}) before the Auto-Refresh Command can be applied. An internal address counter supplies the addresses during the refresh cycle. No control of the external address bus is required once this cycle has started.

When the refresh cycle has completed, all banks of the SDRAM will be in the precharged (idle) state. A delay between the Auto-Refresh Command and the next Activate Command or subsequent Auto-Refresh Command must be greater than or equal to the Auto-Refresh cycle time (t_{RFC}).

To allow for improved efficiency in scheduling and switching between tasks, some flexibility in the absolute refresh interval is provided. A maximum of eight Auto-Refresh commands can be posted to any given DDR2 SDRAM, meaning that the maximum absolute interval between any Auto-Refresh command and the next Auto-Refresh command is 9 * tREFI.

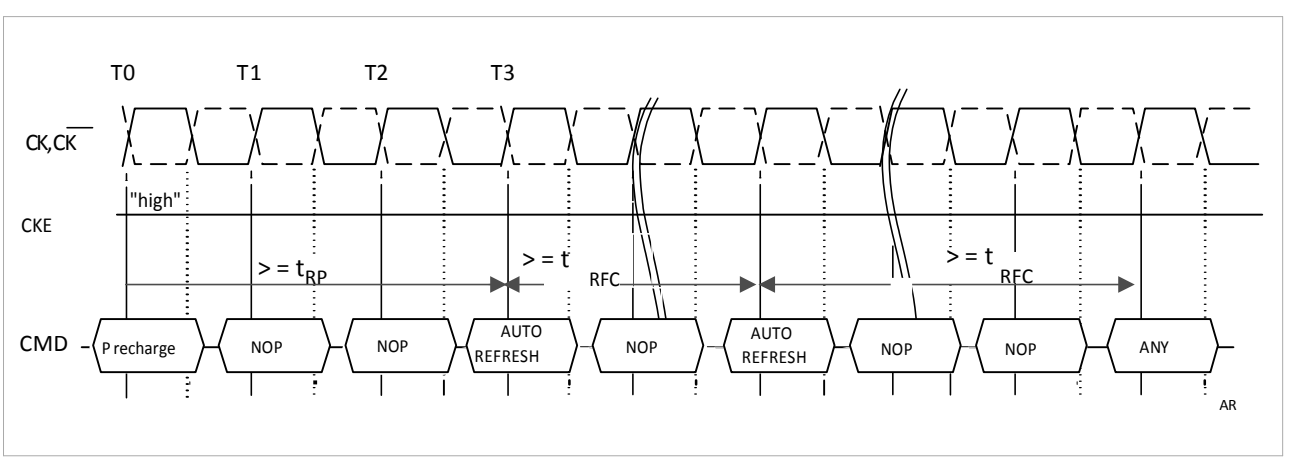

Self-Refresh Command

The Self-Refresh command can be used to retain data, even if the rest of the system is powered down. When in the Self-Refresh mode, the DDR2 SDRAM retains data without external clocking.

The DDR2 SDRAM device has a built-in timer to accommodate Self-Refresh operation. The Self-Refresh Command is defined by having CS, $\overline{RAS}$, $\overline{CAS}$ and $\overline{CKE}$ held low with $\overline{WE}$ high at the rising edge of the clock. ODT must be turned off before issuing Self Refresh command, by either driving ODT pin low or using EMRS command. Once the command is registered, CKE must be held low to keep the device in Self- Refresh mode. When the DDR2 SDRAM has entered Self-Refresh mode, all of the external control signals, except CKE, are disabled. The clock is internally disabled during Self-Refresh Operation to save power. The user may change the external clock frequency or halt the external clock one clock after Self-Refresh entry is registered, how-ever, the clock must be restarted and stable before the device can exit Self-Refresh operation.

Once Self-Refresh Exit command is registered, a delay equal or longer than the tXSNR or tXSRD must be satisfied before a valid command can be issued to the device. CKE must remain high for the entire Self- Refresh exit period (tXSNR or tXSRD) for proper operation. NOP or DESELECT commands must be registered on each positive clock edge during the Self-Refresh exit interval. Since the ODT function is not sup- ported during Self-Refresh operation, ODT has to be turned off before entering Self-Refresh Mode (tAOFD) and can be turned on again when the tXSRD timing is satisfied.

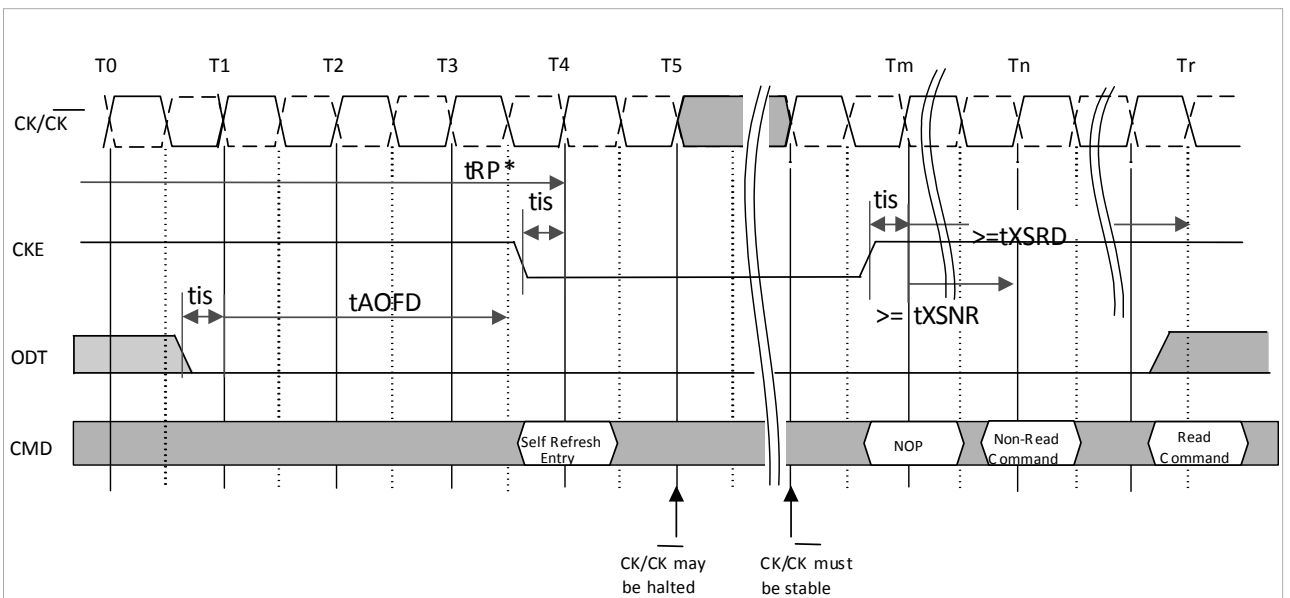

* = Device must be in the "All banks idle" state to entering Self Refresh mode. ODT mus t be turned off prior to entering Self Refresh mode.
tXSRD has to be satisfied for a Read or a Read with Auto-Precharge command.
tXSNR has to be satisfied for any command except a Read or a Read with Auto-Precharge command.

Power-Down

Power-down is synchronously entered when CKE is registered low along with NOP or Deselect command. No read or write operation may be in progress when CKE goes low. These operations are any of the following: read burst or write burst and recovery. CKE is allowed to go low while any of other operations such as row activation, precharge or autoprecharge, mode register or extended mode register command time, or auto refresh is in progress. The DLL should be in a locked state when power-down is entered. Otherwise DLL should be reset after exiting power-down mode for proper read operation.

If power-down occurs when all banks are precharged, this mode is referred to as *Precharge Power-down*; if power-down occurs when there is a row active in any bank, this mode is referred to as *Active Power-down*. For *Active Power-down* two different power saving modes can be selected within the MRS register, address bit A12. When A12 is set to "low" this mode is referred as "standard active power-down mode" and a fast power-down exit timing defined by the tXARD timing parameter can be used. When A12 is set to "high" this mode is referred as a power saving "low power active power-down mode". This mode takes longer to exit from the power-down mode and the tXARDS timing parameter has to be satisfied.
Entering power-down deactivates the input and output buffers, excluding CK, $\overline{CK}$, ODT and CKE. Also the DLL is disabled upon entering precharge power-down or slow exit active power-down, but the DLL is kept enabled during fast exit active power-down. In power-down mode, CKE low and a stable clock signal must be maintained at the inputs of the DDR2 SDRAM, and all other input signals are "Don't Care". Power-down duration is limited by 9 times tREFI of the device.

The power-down state is synchronously exited when CKE is registered high (along with a NOP or Deselect command). A valid, executable command can be applied with power-down exit latency, tsp., tXARD or tXARDS, after CKE goes high. Power-down exit latencies are defined in the AC spec table of this data sheet.

Power-Down Entry

Active Power-down mode can be entered after an activate command. *Precharge Power-down* mode can be entered after a precharge, precharge-all or internal precharge command. It is also allowed to enter power- mode after an Auto-Refresh command or MRS / EMRS command when timed is satisfied.

Active Power-down mode entry is prohibited as long as a Read Burst is in progress, meaning CKE should be kept high until the burst operation is finished. Therefore Active Power-Down mode entry after a Read or Read with Auto-Precharge command is allowed after RL + BL/2 is satisfied.

Active Power-down mode entry is prohibited as long as a Write Burst and the internal write recovery is in progress. In case of a write command, active power-down mode entry is allowed when WL + BL/2 + tWTR is satisfied.

In case of a write command with auto-precharge, power-down mode entry is allowed after the internal pre- charge command has been executed, which WL + BL/2 + WR is starting from the write with auto-precharge command. In case the DDR2 SDRAM enters the *Precharge Power-down* mode.

Active Power-Down Mode Entry and Exit after an Activate Command

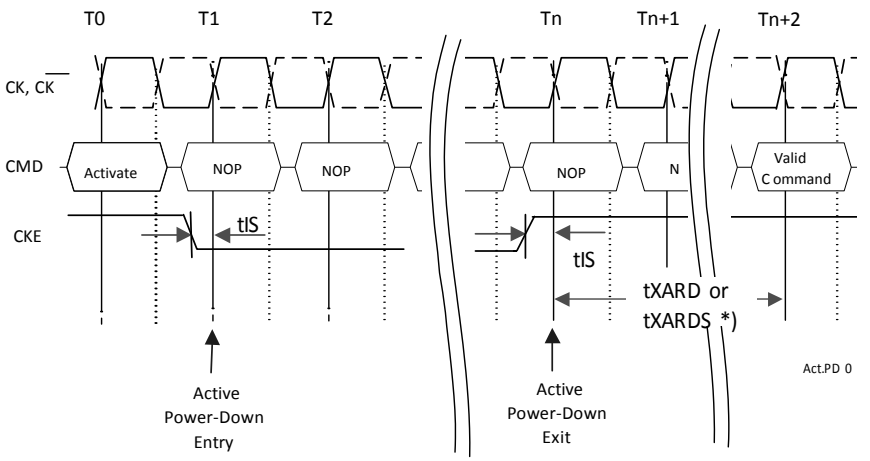

note: Active Power-Down mode exit timing tXARD ("fast exit") or tXARDS ("slow exit") depends on the programmed state in the MRS, address bit A12.

Active Power-Down Mode Entry and Exit after a Read Burst: RL = 4 (AL = 1, CL =3), BL = 4

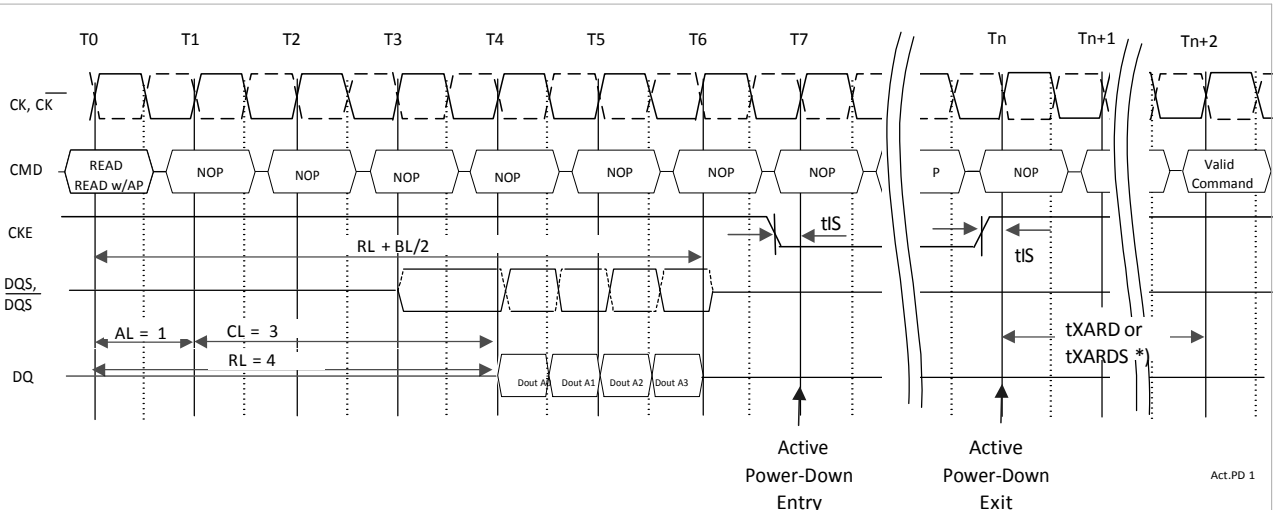

note: Active Power-Down mode exit timing tXARD ("fast exit") or tXARDS ("slow exit") depends on the programmed state in the MRS, address bit A12.

Active Power-Down Mode Entry and Exit after a Write Burst: WL = 2, tWTR = 2, BL = 4

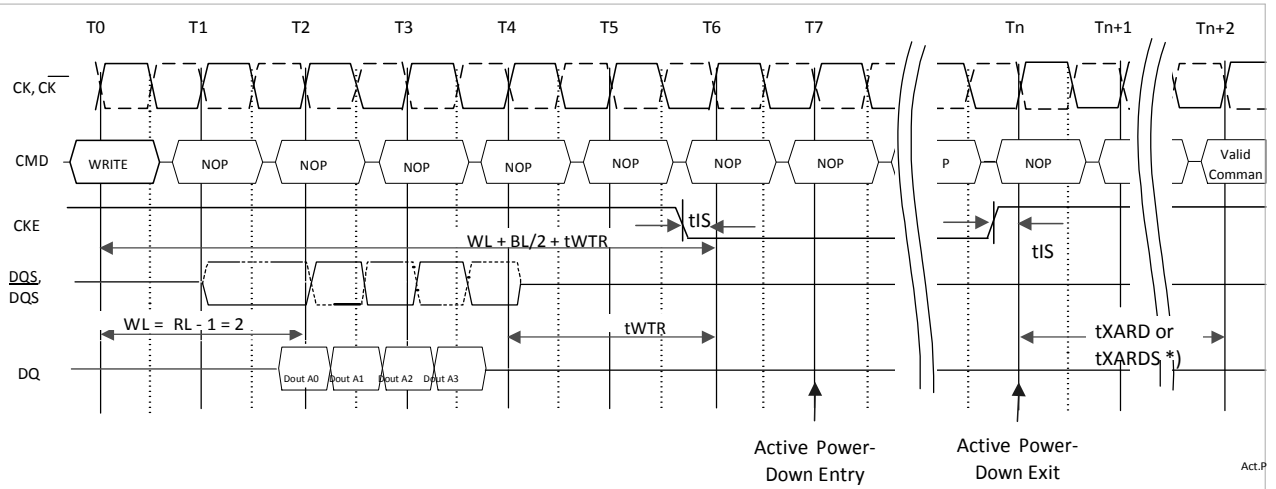

note: Active Power-Down mode exit timing tXARD ("fast exit") or tXARDS ("slow exit") depends on the programmed state in the MRS, address bit A12.

Precharge Power Down Mode Entry and Exit

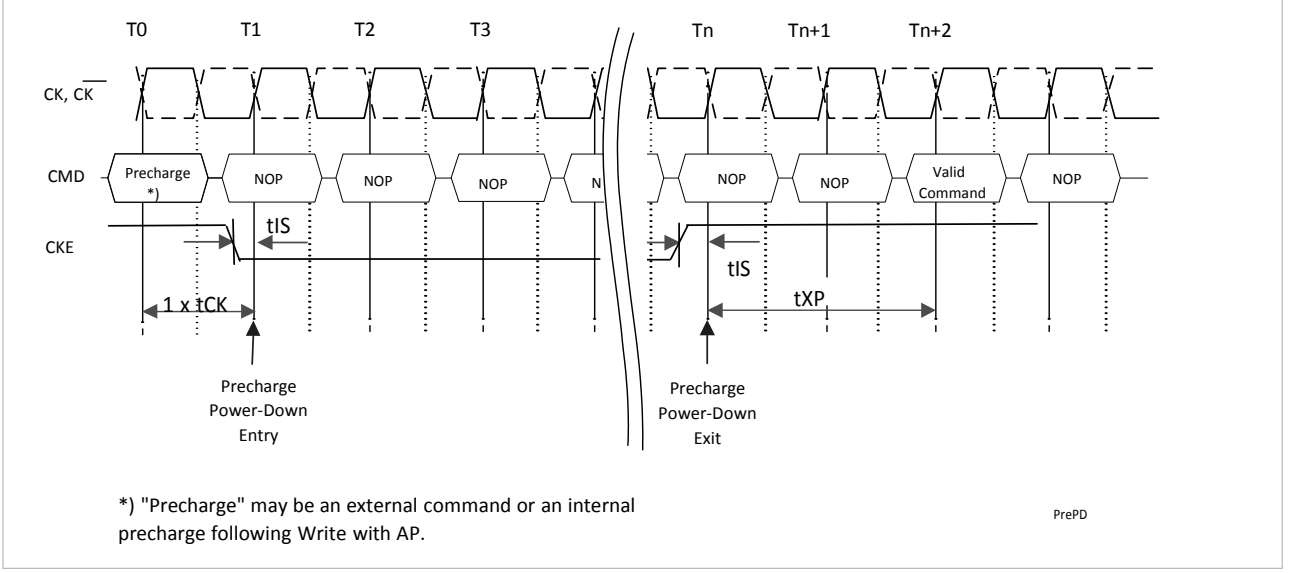

*) "Precharge" may be an external command or an internal precharge following Write with AP.

No Operation Command

The No Operation Command should be used in cases when the SDRAM is in an idle or a wait state. The purpose of the No Operation Command is to prevent the SDRAM from registering any unwanted commands between operations. A No Operation Command is registered when CS is low with RAS, CAS, and WE held high at the rising edge of the clock. A No Operation Command will not terminate a previous operation that is still executing, such as a burst read or write cycle.

Deselect Command

The Deselect Command performs the same function as a No Operation Command. Deselect Command occurs when $\overline{CS}$ is brought high, the RAS, CAS, and WE signals become don't care.

Input Clock Frequency Change

During operation the DRAM input clock frequency can be changed under the following conditions:

a) During Self-Refresh operation

b) DRAM is in precharged power-down mode and ODT is completely turned off.

The DDR2-SDRAM has to be in precharged power-down mode and idle. ODT must be already turned off and CKE must be at a logic "low" state. After a minimum of two clock cycles after tRP and tAOFD have been satisfied the input clock frequency can be changed. A stable new clock frequency has to be provided, before CKE can be changed to a "high" logic level again. After tXP has been satisfied a DLL RESET command via EMRS has to be issued. During the following DLL re-lock period of 200 clock cycles, ODT must remain off. After the DLL-re-lock period the DRAM is ready to operate with the new clock frequency.

Clock Frequency Change in Precharge Power Down Mode

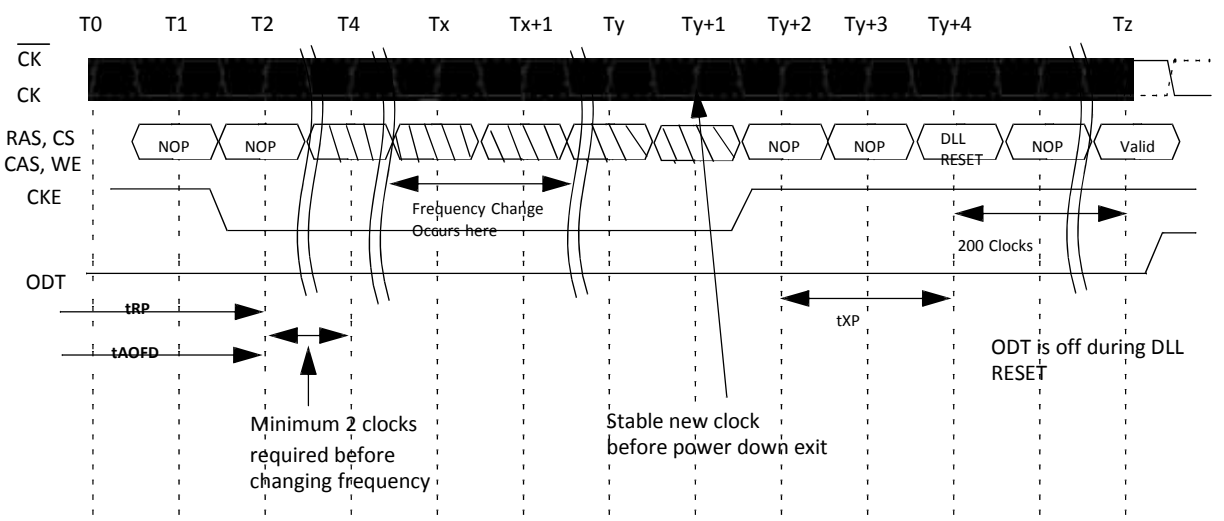

Asynchronous CKE Low Event

DRAM requires CKE to be maintained "high" for all valid operations as defined in this data sheet. If CKE asynchronously drops "low" during any valid operation DRAM is not guaranteed to preserve the contents of the memory array. If this event occurs, the memory controller must satisfy a time delay (t_{delay}) before turning off the clocks. Stable clocks must exist at the input of DRAM before CKE is raised "high" again. The DRAM must be fully re-initialized as described the initialization sequence starting with step 4.

The DRAM is ready for normal operation after the initialization sequence. The minimum time clocks needs to be ON after CKE asynchronously drops low (the t_{delay} timing parameter) is equal to tIS + tCK + tIH.

Asynchronous CKE Low Event

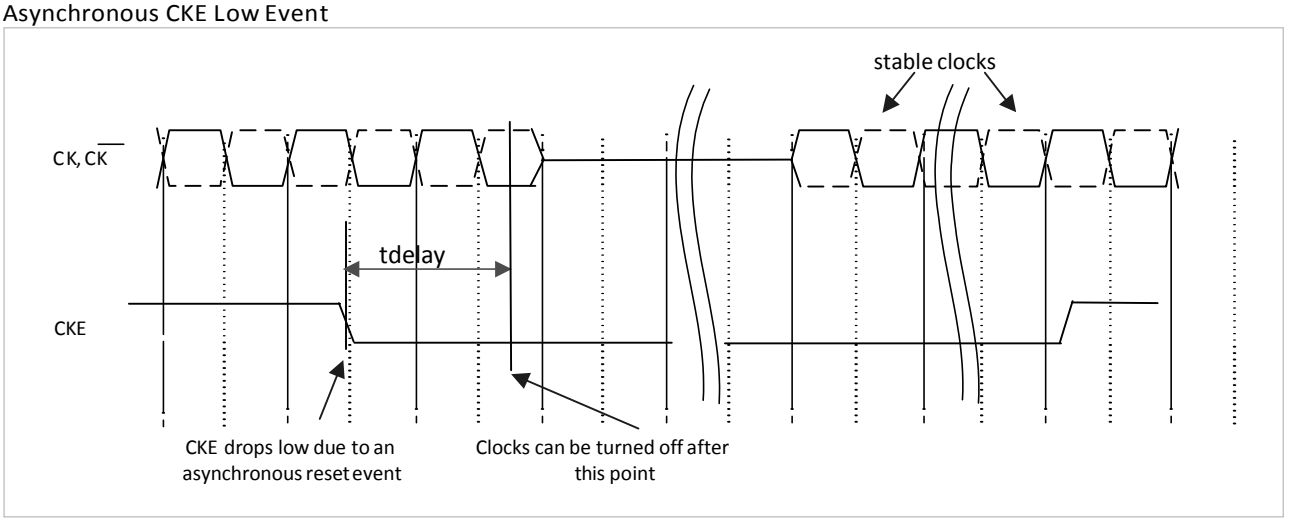

Command Truth Table

Function	CKE		$\overline{CS}$	$\overline{RAS}$	$\overline{CAS}$	$\overline{WE}$	BA0 - BAx[9]	Axx[9]-A11	A10	A9 - A0	Notes
	Previous Cycle	Current Cycle									
(Extended) Mode Register Set	H	H	L	L	L	L	BA	OP Code			1,2
Refresh (REF)	H	H	L	L	L	H	X	X	X	X	1
Self Refresh Entry	H	L	L	L	L	H	X	X	X	X	1,8
Self Refresh Exit	L	H	H	X	X	X	X	X	X	X	1,7,8
			L	H	H	H					
Single Bank Precharge	H	H	L	L	H	L	BA	X	L	X	1,2
Precharge all Banks	H	H	L	L	H	L	X	X	H	X	1
Bank Activate	H	H	L	L	H	H	BA	Row Address			1,2
Write	H	H	L	H	L	L	BA	Column	L	Column	1,2,3,
Write with Auto Precharge	H	H	L	H	L	L	BA	Column	H	Column	1,2,3,
Read	H	H	L	H	L	H	BA	Column	L	Column	1,2,3
Read with Auto-Precharge	H	H	L	H	L	H	BA	Column	H	Column	1,2,3
No Operation	H	X	L	H	H	H	X	X	X	X	1
Device Deselect	H	X	H	X	X	X	X	X	X	X	1
Power Down Entry	H	L	H	X	X	X	X	X	X	X	1,4
			L	H	H	H					
Power Down Exit	L	H	H	X	X	X	X	X	X	X	1,4
			L	H	H	H					

NOTE 1 All DDR2 SDRAM commands are defined by states of CS, RAS, CAS , WE and CKE at the rising edge of the clock. NOTE 2 Bank addresses BA0, BA1, BA2 (BA) determine which bank is to be operated upon. For (E)MRS BA selects an (Extended) Mode Register.
NOTE 3 Burst reads or writes at BL=4 cannot be terminated or interrupted. See sections "Reads interrupted by a Read" and "Writes interrupted by a Write" in section 2.6 for details.
NOTE 4 The Power Down Mode does not perform any refresh operations. The duration of Power Down is therefore limited by the refresh requirements outlined in section 2.9.
NOTE 5 The state of ODT does not affect the states described in this table. The ODT function is not available during Self Refresh. See section 2.4.4.
NOTE 6 “X” means “H or L (but a defined logic level)” NOTE 7
Self refresh exit is asynchronous.
NOTE 8 VREF must be maintained during Self Refresh operation.
NOTE 9 BAx and Axx refers to the MSBs of bank addresses and addresses, respectively, per device density.

Clock enable (CKE) truth table for synchronous transitions

Current State [2]	CKE		Command (N) [3]	Action (N) [3]	Notes
	Previous Cycle [1] (N-1)	Current Cycle [1] (N)	$\overline{RAS}$, $\overline{CAS}$, $\overline{WE}$, $\overline{CS}$		
Power Down	L	L	X	Maintain Power-Down	11, 13, 14
	L	H	DESELECT or NOP	Power Down Exit	4, 8, 11,13
Self Refresh	L	L	X	Maintain Self Refresh	11, 14,15
	L	H	DESELECT or NOP	Self Refresh Exit	4, 5, 9, 15
Bank(s) Active	H	L	DESELECT or NOP	Active Power Down Entry	4, 8, 10, 11, 13
All Banks Idle	H	L	DESELECT or NOP	Precharge Power Down Entry	4, 8, 10, 11,13
	H	L	REFRESH	Self Refresh Entry	6, 9, 11,13
	H	H	Refer to the Command Truth Table		7

NOTE 1 CKE (N) is the logic state of CKE at clock edge N; CKE (N–1) was the state of CKE at the previous clock edge. NOTE 2 Current state is the state of the DDR2 SDRAM immediately prior to clock edge N.

NOTE 3 COMMAND (N) is the command registered at clock edge N, and ACTION (N) is a result of COMMAND (N). NOTE 4 All states and sequences not shown are illegal or reserved unless explicitly described elsewhere in this document.

NOTE 5 On Self Refresh Exit DESELECT or NOP commands must be issued on every clock edge occurring during the t_{XSNR} period. Read commands may be issued only after t_{XSRD} (200 clocks) is satisfied.

NOTE 6 Self Refresh mode can only be entered from the All Banks Idle state. NOTE 7 Must be a legal command as defined in the Command Truth Table.

NOTE 8 Valid commands for Power Down Entry and Exit are NOP and DESELECT only. NOTE 9 Valid commands for Self Refresh Exit are NOP and DESELECT only.

NOTE 10 Power Down and Self Refresh cannot be entered while Read or Write operations, (Extended) Mode Register Set operations or Precharge operations are in progress. See section Power-down and Self refresh operation for a detailed list of restrictions.

NOTE 11 tCKEmin of 3 clocks means CKE must be registered on three consecutive positive clock edges. CKE must remain at the valid input level the entire time it takes to achieve the 3 clocks of registration. Thus, after any CKE transition, CKE may not transition from its valid level during the time period of tIS + 2 x tCK + tIH.

NOTE 12 The state of ODT does not affect the states described in this table. The ODT function is not available during Self Refresh.

NOTE 13 The Power Down does not perform any refresh operations. The duration of Power Down Mode is therefore limited by the refresh requirements outlined in Refresh command section.

NOTE 14 "X" means "don't care (including floating around VREF)" in Self Refresh and Power Down. However ODT must be driven HIGH or LOW in Power Down if the ODT function is enabled (Bit A2 or A6 set to "1" in EMR(1)).

NOTE 15 V_{REF} must be maintained during Self Refresh operation.

DM truth table

Name (Functional)	DM	DQs	Note
Write enable	L	Valid	1
Write inhibit	H	X	1
NOTE 1 Used to mask write data, provided coincident with the corresponding data			

Absolute maximum DC ratings

Symbol	Parameter	Rating	Units	Notes
VDD	Voltage on VDD pin relative to Vss	- 1.0 V ~ 2.3 V	V	1,3
VDDQ	Voltage on VDDQ pin relative to Vss	- 0.5 V ~ 2.3 V	V	1,3
VDDL	Voltage on VDDL pin relative to Vss	- 0.5 V ~ 2.3 V	V	1,3
V_{IN}, V_{OUT}	Voltage on any pin relative to Vss	- 0.5 V ~ 2.3 V	V	1
T_{STG}	Storage Temperature	-55 to +100	C	1, 2

NOTE 1 Stresses greater than those listed under "Absolute Maximum Ratings" may cause permanent damage to the device. This is a stress rating only and functional operation of the device at these or any other conditions above those indicated in the operational sections of this specification is not implied. Exposure to absolute maximum rating conditions for extended periods may affect reliability
NOTE 2 Storage Temperature is the case surface temperature on the center/top side of the DRAM. For the measurement conditions, please refer to JESD51-2 standard.
NOTE 3 When VDD and VDDQ and VDDL are less than 500 mV, Vref may be equal to or less than 300 mV.

AC & DC operating conditions

Operation or timing that is not specified is illegal, and after such an event, in order to guarantee proper operation, the DRAM must be powered down and then restarted through the speechified initialization sequence before normal operation can continue.

Recommended DC operating conditions (SSTL_1.8)

Symbol	Parameter	Rating			Units	Notes
		Min.	Typ.	Max.		
VDD	Supply Voltage	1.7	1.8	1.9	V	1
VDDL	Supply Voltage for DLL	1.7	1.8	1.9	V	5
VDDQ	Supply Voltage for Output	1.7	1.8	1.9	V	1, 5
VREF	Input Reference Voltage	0.49 x VDDQ	0.50 x VDDQ	0.51 x VDDQ	mV	2. 3
VTT	Termination Voltage	VREF - 0.04	VREF	VREF + 0.04	V	4

NOTE 1 There is no specific device VDD supply voltage requirement for SSTL_18 compliance. However under all conditions VDDQ must be less than or equal to VDD.
NOTE 2 The value of VREF may be selected by the user to provide optimum noise margin in the system. Typically the value of VREF is expected to be about 0.5 x VDDQ of the transmitting device and VREF is expected to track variations in VDDQ.
NOTE 3 Peak to peak ac noise on VREF may not exceed +/-2 % VREF(dc).
NOTE 4 VTT of transmitting device must track VREF of receiving device.
NOTE 5 VDDQ tracks with VDD, VDDL tracks with VDD. AC parameters are measured with VDD, VDDQ and VDDDL tied together

Measurement Definition for VM: Measure voltage (V_M) at test pin (midpoint) with no load.

$$VM = \left(\frac{2 \times Vm}{VDDQ} - 1\right) \times 100\%$$

Input DC logic level

Symbol	Parameter	Min.	Max.	Units	Notes
V_{IH}(dc)	dc input logic HIGH	V_{REF} + 0.125	V_{DDQ} + 0.3	V	
V_{IL}(dc)	dc input logic LOW	- 0.3	V_{REF} - 0.125	V	

Input AC logic level

Symbol	Parameter	Min	Max	Unit
VIH(ac)	ac input logic HIGH	VREF + 0.200	VDDQ + Vpeak	V
VIL(ac)	ac input logic LOW	VSSQ - Vpeak	VREF - 0.200	V

AC input test conditions

Symbol	Condition	Value	Units	Notes
V_{REF}	Input reference voltage	0.5 x V_{DDQ}	V	1
$V_{SWING(MAX)}$	Input signal maximum peak to peak swing	1.0	V	1
SLEW	Input signal minimum slew rate	1.0	V/ns	2, 3

NOTE 1 Input waveform timing is referenced to the input signal crossing through the $V_{IH/IL(AC)}$ level applied to the device under test.

NOTE 2 The input signal minimum slew rate is to be maintained over the range from V_{REF} to $V_{IH(ac)}$ min for rising edges and the range from V_{REF} to $V_{IL(ac)}$ max for falling edges as shown in the below figure.

NOTE 3 AC timings are referenced with input waveforms switching from VIL(ac) to VIH(ac) on the positive transitions and VIH(ac) to VIL(ac) on the negative transitions.

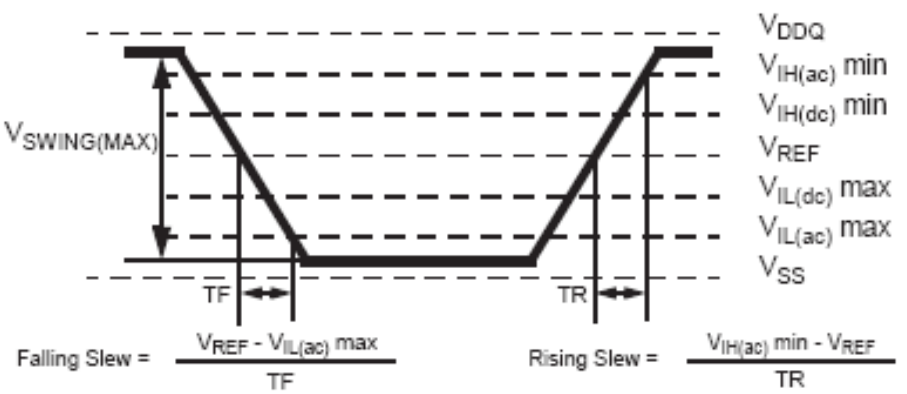

AC input test signal waveform

AC & DC operating conditions (cont'd)

Differential input AC logic level

Symbol	Parameter	Min	Max	Unit	Notes
VID(ac)	ac differential input voltage	0.5	VDDQ	V	1
VIX(ac)	ac differential cross point voltage	0.5xVDDQ - 0.175	0.5xVDDQ + 0.175	V	2

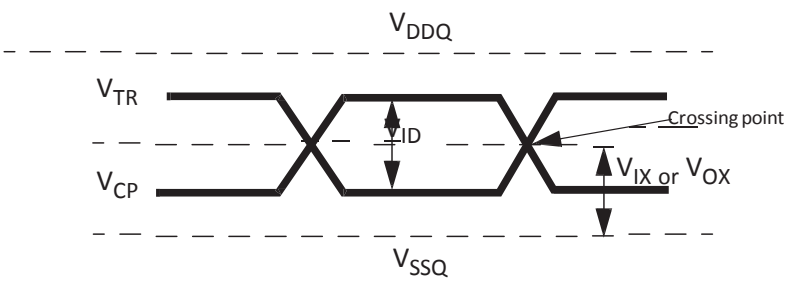

NOTE 1 $V_{ID(AC)}$ specifies the input differential voltage $|V_{TR} - V_{CP}|$ required for switching, where V_{TR} is the true input signal (such as CK, DQS, LDQS or UDQS) and V_{CP} is the complementary input signal (such as CK, DQS, LDQS or UDQS). The minimum value is equal to $V_{IH(AC)} - V_{IL(AC)}$.

NOTE 2 The typical value of $V_{IX(AC)}$ is expected to be about 0.5 x VDDQ of the transmitting device and $V_{IX(AC)}$ is expected to track variations in VDDQ. $V_{IX(AC)}$ indicates the voltage at which differential input signals must cross.

Differential signal levels

Differential AC output parameters

Symbol	Parameter	Min.	Max.	Units	Notes
$V_{ox\ (ac)}$	ac differential cross point voltage	0.5 x VDDQ - 0.125	0.5 x VDDQ + 0.125	V	1

NOTE 1 The typical value of $V_{OX(AC)}$ is expected to be about 0.5 x VDDQ of the transmitting device and $V_{OX(AC)}$) is expected to track variations in VDDQ . $V_{OX(AC)}$ indicates the voltage at which differential output signals must cross.

Overshoot/undershootspecification

AC overshoot/undershoot specification for address and control pins:

A0-A15, BA0-BA2, $\overline{CS}$, $\overline{RAS}$, $\overline{CAS}$, $\overline{WE}$, $\overline{CKE}$, ODT

Parameter	DDR2-800	Unit
Maximum peak amplitude allowed for overshoot area	0.5(0.9)[1]	V
Maximum peak amplitude allowed for undershoot area	0.5(0.9)[1]	V
Maximum overshoot area above VDDQ	0.66	V-ns
Maximum undershoot area below VSSQ	0.66	V-ns

NOTE 1 The maximum requirements for peak amplitude were reduced from 0.9V to 0.5V. Register vendor data sheets will specify the maximum over/undershoot induced in specific RDIMM applications. DRAM vendor data sheets will also specify the maxi- mum overshoot/undershoot that their DRAM can tolerate. This will allow the RDIMM supplier to understand whether the DRAM can tolerate the overshoot that the register will induce in the specific RDIMM application.

AC & DC operating conditions (cont'd)

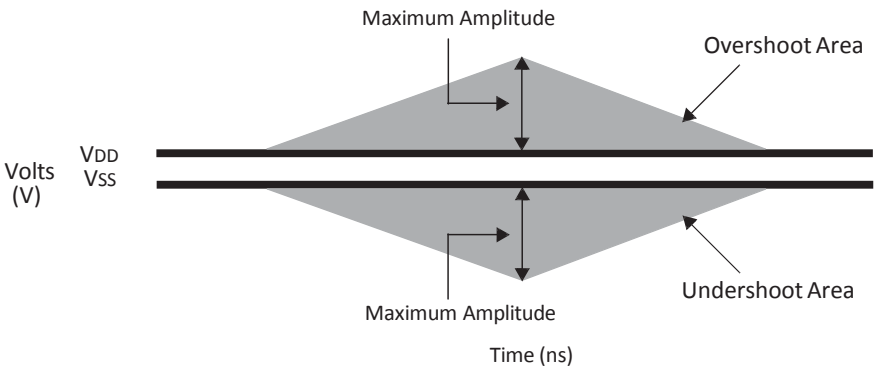

AC overshoot and undershoot definition for address and control pins

AC overshoot/undershoot specification for clock, data, strobe, and mask pins:

DQ, (U/L/R)DQS, ($\overline{\text{U/L/R)DQS}}$, $\overline{\text{DM}}$, CK, $\overline{\text{CK}}$

Parameter	DDR2-800	Unit
Maximum peak amplitude allowed for overshoot area	0.5	V
Maximum peak amplitude allowed for undershoot area	0.5	V
Maximum overshoot area above VDDQ	0.23	V-ns
Maximum undershoot area below VSSQ	0.23	V-ns

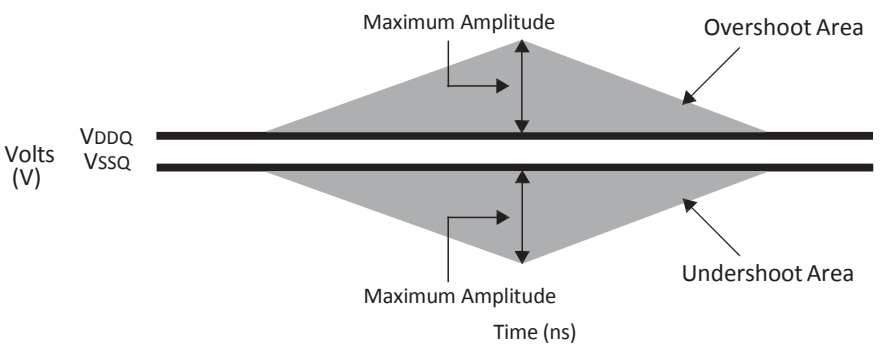

AC overshoot and undershoot definition for clock, data, strobe, and mask pins

Power and ground clamps are required on the following input only pins:

a) BA0-BAx

b) A0-Axx

c) $\overline{\text{RAS}}$

d) $\overline{\text{CAS}}$

e) $\overline{\text{WE}}$

f) $\overline{\text{CS}}$

g) ODT

h) CKE

AC & DC operating conditions (cont'd)

V-I characteristics for input-only pins with clamps

Voltage across Clamp (V)	Minimum Power Clamp Current (mA)	Minimum Ground Clamp Current (mA)
0.0	0	0
0.1	0	0
0.2	0	0
0.3	0	0
0.4	0	0
0.5	0	0
0.6	0	0
0.7	0	0
0.8	0.1	0.1
0.9	1.0	1.0
1.0	2.5	2.5
1.1	4.7	4.7
1.2	6.8	6.8
1.3	9.1	9.1
1.4	11.0	11.0
1.5	13.5	13.5
1.6	16.0	16.0
1.7	18.2	18.2
1.8	21.0	21.0

Output buffer characteristics

Output AC test conditions

Symbol	Parameter	SSTL_18	Units	Notes
V_{OTR}	Output Timing Measurement Reference Level	0.5 x V_{DDQ}	V	1
NOTE 1 The VDDQ of the device under test is referenced.				

Output DC current drive

Symbol	Parameter	SSTl_18	Units	Notes
$I_{OH(dc)}$	Output Minimum Source DC Current	- 13.4	mA	1, 3, 4
$I_{OL(dc)}$	Output Minimum Sink DC Current	13.4	mA	2, 3, 4

NOTE 1 V_{DDQ} = 1.7 V; V_{OUT} = 1420 mV. (V_{OUT} - V_{DDQ})/I_{OH} must be less than 21 for values of V_{OUT} between V_{DDQ} and V_{DDQ} - 280 mV.

NOTE 2 V_{DDQ} = 1.7 V; V_{OUT} = 280 mV. V_{OUT}/I_{OL} must be less than 21 for values of V_{OUT} between 0 V and 280 mV.

NOTE 3 The dc value of V_{REF} applied to the receiving device is set to V_{TT}

NOTE 4 The values of $I_{OH(dc)}$ and $I_{OL(dc)}$ are based on the conditions given in Notes 1 and 2. They are used to test device drive current capability to ensure V_{IH} min plus a noise margin and V_{IL} max minus a noise margin are delivered to an SSTL_18 receiver. The actual current values are derived by shifting the desired driver operating point (see Section 3.3 of JESD8-15A) along a 21 load line to define a convenient driver current for measurement.

Table 1. **Full Strength Default Pulldown Driver Characteristics**

	Pulldown Current (mA)			
Voltage (V)	Minimum (23.4 Ohms	Nominal Default Low (18 ohms)	Nominal Default High (18 ohms)	Maximum (12.6 Ohms)
0.2	8.5	11.3	11.8	15.9
0.3	12.1	16.5	16.8	23.8
0.4	14.7	21.2	22.1	31.8
0.5	16.4	25.0	27.6	39.7
0.6	17.8	28.3	32.4	47.7
0.7	18.6	30.9	36.9	55.0
0.8	19.0	33.0	40.9	62.3
0.9	19.3	34.5	44.6	69.4
1.0	19.7	35.5	47.7	75.3
1.1	19.9	36.1	50.4	80.5
1.2	20.0	36.6	52.6	84.6
1.3	20.1	36.9	54.2	87.7
1.4	20.2	37.1	55.9	90.8
1.5	20.3	37.4	57.1	92.9
1.6	20.4	37.6	58.4	94.9
1.7	20.6	37.7	59.6	97.0
1.8		37.9	60.9	99.1
1.9				101.1

Figure 1. **DDR2 Default Pulldown Characteristics for Full Strength Driver**

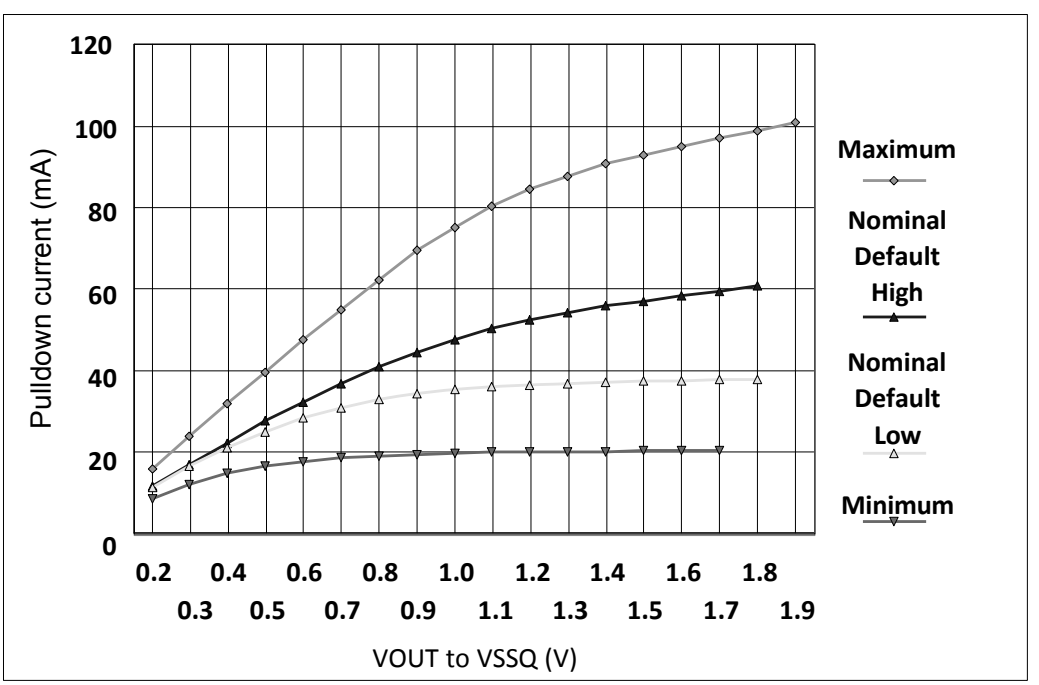

Table 2. **Full Strength Default Pullup Driver Characteristics**

	Pullup Current (mA)			
Voltage (V)	Minimal (23.4 Ohms	Nominal Default Low (18 ohms)	Nominal Default High (18 ohms)	Maximum (12.6 Ohms)
0.2	-8.5	-11.1	-11.8	-15.9
0.3	-12.1	-16.0	-17.0	-23.8
0.4	-14.7	-20.3	-22.2	-31.8
0.5	-16.4	-24.0	-27.5	-39.7
0.6	-17.8	-27.2	-32.4	-47.7
0.7	-18.6	-29.8	-36.9	-55.0
0.8	-19.0	-31.9	-40.8	-62.3
0.9	-19.3	-33.4	-44.5	-69.4
1.0	-19.7	-34.6	-47.7	-75.3
1.1	-19.9	-35.5	-50.4	-80.5
1.2	-20.0	-36.2	-52.5	-84.6
1.3	-20.1	-36.8	-54.2	-87.7
1.4	-20.2	-37.2	-55.9	-90.8
1.5	-20.3	-37.7	-57.1	-92.9
1.6	-20.4	-38.0	-58.4	-94.9
1.7	-20.6	-38.4	-59.6	-97.0
1.8		-38.6	-60.8	-99.1
1.9				-101.1

Figure 2. **DDR2 Default Pullup Characteristics for Full Strength Output Driver**

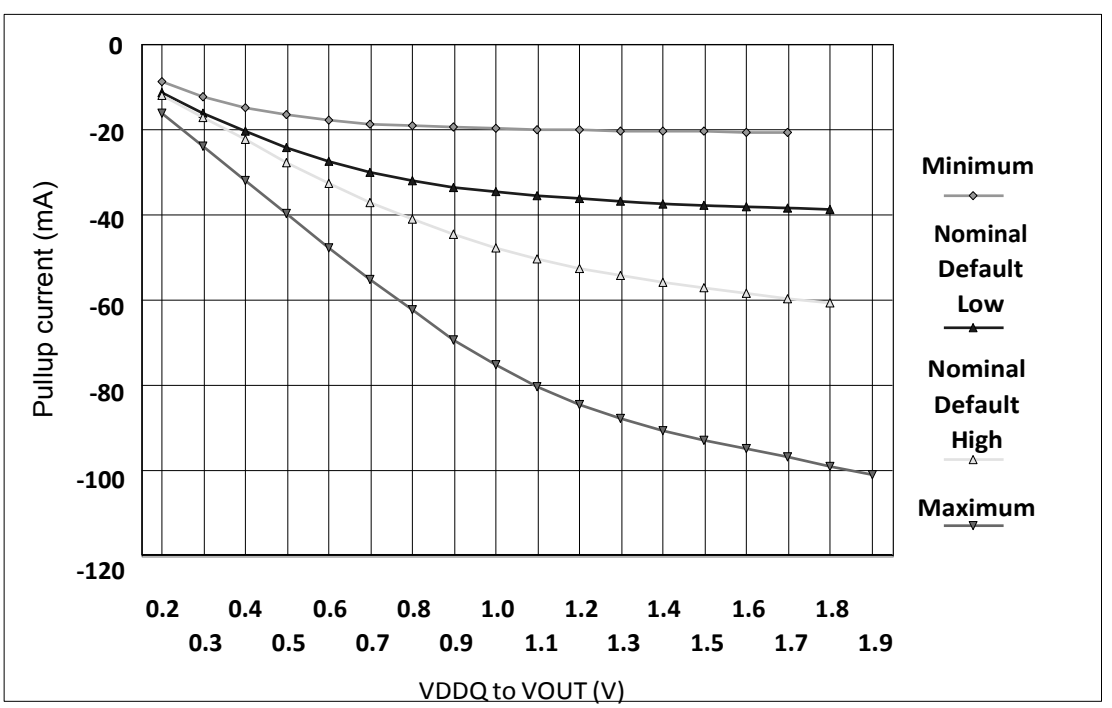

DDR2 SDRAM Default Output Driver V-I Characteristics

DDR2 SDRAM output driver characteristics are defined for full strength default operation as selected by the EMRS1 bits A7-A9 = '111'. Figures 1 and 2 show the driver characteristics graphically, and tables 1 and 2 show the same data in tabular format suitable for input into simulation tools. The driver characteristics evaluation conditions are:

Nominal Default 25°C (T case), VDDQ = 1.8V, typical process

Minimum 85°C (T case), VDDQ = 1.7 V, slow - slow process

Maximum 0°C (T case), VDDQ = 1.9V, fast - fast process

Default Output Driver Characteristic Curves Notes:

1) The full variation in driver current from minimum to maximum process, temperature, and voltage will lie within the outer bounding lines of the V-I curve of figures 1 and 2.
2) It is recommended that the "typical" IBIS V-I curve lie within the inner bounding lines of the V-I curves of figures 1 and 2.

Table 3. **Full Strength Calibrated Pulldown Driver Characteristics**

	Calibrated Pulldown Current (mA)				
Voltage (V)	Nominal Minimum (21 ohms)	Nominal Low (18.75 ohms)	Nominal (18 ohms)	Nominal High (17.2 ohms)	Nominal Maximum (15 ohms)
0.2	9.5	10.7	11.5	11.8	13.3
0.3	14.3	16.0	16.6	17.4	20.0
0.4	18.7	21.0	21.6	23.0	27.0

Table 4. **Full Strength Calibrated Pullup Driver Characteristics**

	Calibrated Pullup Current (mA)				
Voltage (V)	Nominal Minimum (21 ohms)	Nominal Low (18.75 ohms)	Nominal (18 ohms)	Nominal High (17.2 ohms)	Nominal Maximum (15 ohms)
0.2	-9.5	-10.7	-11.4	-11.8	-13.3
0.3	-14.3	-16.0	-16.5	-17.4	-20.0
0.4	-18.7	-21.0	-21.2	-23.0	-27.0

DDR2 SDRAM Calibrated Output Driver V-I Characteristics

Tables 3 and 4 show the detain tabular format suitable for input into simulation tools. The nominal points represent a device at exactly 18 ohms. The nominal low and nominal high values represent the range that can be achieved with a maximum 1.5 ohm step size with no calibration error at the exact nominal conditions only (i.e. perfect calibration procedure, 1.5 ohm maximum step size guaranteed by specification). Real system calibration error needs to be added to these values.

It must be understood that these V-I curves as represented here or in supplier IBIS models need to be adjusted to a wider range as a result of any system calibration error. Since this is a system specific phenomena, it cannot be quantified here. The values in the calibrated tables represent just the DRAM portion of uncertainty while looking at one DQ only. If the calibration procedure is used, it is possible to cause the device to operate outside the bounds of the default device characteristics tables and figures.

In such a situation, the timing parameters in the specification cannot be guaranteed. It is solely up to the system application to ensure that the device is calibrated between the minimum and maximum default values at all times. If this can't be guaranteed by the system calibration procedure, re-calibration policy, and uncertainty with DQ to DQ variation, then it is recommended that only the default values be used.

The nominal maximum and minimum values represent the change in impedance from nominal low and high as a result of voltage and temperature change from the nominal condition to the maximum and minimum conditions. If calibrated at an extreme condition, the amount of variation could be as much as from the nominal minimum to the nominal maximum or vice versa. The driver characteristics evaluation conditions are:

Nominal 25°C (T case), VDDQ = 1.8 V, typical process

Nominal Low and Nominal High 25°C (T case), VDDQ = 1.8 V, any process Nominal

Minimum 85°C (T case), VDDQ = 1.7 V, any process

Nominal Maximum 0°C (T case), VDDQ = 1.9 V, any process

IDD Specifications for DDR2-667/DDR2-800

(VDDQ=1.8V+/-0.1V;VDD=1.8V+/-0.1V)

Symbol	Parameter/Condition	-25 DDR2-800	Unit	Notes
I_{DD0}	Operating Current	120	mA	1,2
I_{DD1}	Operating Current	130	mA	1,2
I_{DD2P}	Precharge Power-Down Current	15	mA	1,2
I_{DD2N}	Precharge Standby Current	95	mA	1,2
I_{DD2Q}	Precharge Quiet Standby Current	65	mA	1,2
I_{DD3P}	Active Power Down Standby Current MRS(12)=0	26	mA	1,2
	Active Power Down Standby Current MRS(12)=1	16	mA	1,2
I_{DD3N}	Active Standby Current	95	mA	1,2
I_{DD4R}	Operating Current Burst Read	280	mA	1,2
I_{DD4W}	Operating Current Burst Write	360	mA	1,2
I_{DD5B}	Burst Auto-Refresh Current (tRFC=tRFCmin)	230	mA	1,2
I_{DD5D}	Distributed Refresh Current (tCK=tCKmin)	95	mA	1,2
I_{DD6}	Self-Refresh Current for Standard products	6	mA	1,2
I_{DD6-L}	Self-Refresh Current for Low power products	4.5	mA	1,2
I_{DD7}	Operating Current	300	mA	1,2

AC & DC operating conditions(cont'd)

IDD specification parameters and test conditions

(IDD values are for full operating range of Voltage and Temperature, Notes 1 - 6)

Symbol	Conditions		Max	Units	Notes
IDD0	**Operating one bank active-precharge current;** t_{CK} = $t_{CK(IDD)}$, t_{RC} = $t_{RC(IDD)}$, t_{RAS} = $t_{RASmin(IDD)}$; CKE is HIGH, $\overline{CS}$ is HIGH between valid commands; Address bus inputs are SWITCHING; Data bus inputs are SWITCHING			mA	
IDD1	**Operating one bank active-read-precharge current;** IOUT = 0mA; BL = 4, CL = CL(IDD), AL = 0; t_{CK} = $t_{CK(IDD)}$, t_{RC} = $t_{RC\ (IDD)}$, t_{RAS} = $t_{RASmin(IDD)}$, t_{RCD} = $t_{RCD(IDD)}$; CKE is HIGH, $\overline{CS}$ is HIGH between valid commands; Address bus inputs are SWITCHING; Data pattern is same as IDD4W			mA	
IDD2P	**Precharge power-down current;** All banks idle; t_{CK} = $t_{CK(IDD)}$; CKE is LOW; Other control and address bus inputs are STABLE; Data bus inputs are FLOATING			mA	
IDD2Q	**Precharge quiet standby current;** All banks idle; t_{CK} = $t_{CK(IDD)}$; CKE is HIGH, $\overline{CS}$ is HIGH; Other control and address bus inputs are STABLE; Data bus inputs are FLOATING			mA	
IDD2N	**Precharge standby current;** All banks idle; t_{CK} = $t_{CK(IDD)}$; CKE is HIGH, $\overline{CS}$ is HIGH; Other control and address bus inputs are SWITCHING; Data bus inputs are SWITCHING			mA	
IDD3P	**Active power-down current;** All banks open; t_{CK} = $t_{CK(IDD)}$; CKE is LOW; Other control and address bus inputs are STABLE; Data bus inputs are FLOATING	Fast PDN Exit MRS(12) = 0		mA	
		Slow PDN Exit MRS(12) = 1		mA	
IDD3N	**Active standby current;** All banks open; t_{CK} = $t_{CK(IDD)}$, t_{RAS} = $t_{RASmax(IDD)}$, t_{RP} = $t_{RP(IDD)}$; CKE is HIGH, $\overline{CS}$ is HIGH between valid commands; Other control and address bus inputs are SWITCHING; Data bus inputs are SWITCHING			mA	

AC & DC operating conditions(cont'd)

IDD specification parameters and test conditions

(IDD values are for full operating range of Voltage and Temperature, Notes 1 - 6)

Symbol	Conditions	Max	Units	Notes
IDD4W	**Operating burst write current;** All banks open, Continuous burst writes; BL = 4, CL = CL(IDD), AL = 0; $t_{CK} = t_{CK(IDD)}$, $t_{RAS} = t_{RASmax(IDD)}$, $t_{RP} = t_{RP(IDD)}$; CKE is HIGH, $\overline{CS}$ is HIGH between valid commands; Address bus inputs are SWITCHING; Data bus inputs are SWITCHING		mA	
IDD4R	**Operating burst read current;** All banks open, Continuous burst reads, IOUT = 0 mA; BL = 4, CL = CL(IDD), AL = 0; $t_{CK} = t_{CK(IDD)}$, $t_{RAS} = t_{RASmax(IDD)}$, $t_{RP} = t_{RP(IDD)}$; CKE is HIGH, $\overline{CS}$ is HIGH between valid commands; Address bus inputs are SWITCHING; Data pattern is same as IDD4W		mA	
IDD5B	**Burst refresh current;** $t_{CK} = t_{CK(IDD)}$; Refresh command at every $t_{RFC(IDD)}$ interval; CKE is HIGH, $\overline{CS}$ is HIGH between valid commands; Other control and address bus inputs are SWITCHING; Data bus inputs are SWITCHING		mA	
IDD6	**Self refresh current;** CK and $\overline{CK}$ at 0 V; CKE ≤ 0.2 V; Other control and address bus inputs are FLOATING; Data bus inputs are FLOATING		mA	
IDD7	**Operating bank interleave read current;** All bank interleaving reads, IOUT = 0mA; BL = 4, CL = CL(IDD), AL = $t_{RCD(IDD)}$ - 1 x $t_{CK(IDD)}$; $t_{CK} = t_{CK(IDD)}$, $t_{RC} = t_{RC(IDD)}$, $t_{RRD} = t_{RRD(IDD)}$, $t_{FAW} = t_{FAW(IDD)}$, t_{RCD} = 1 x $t_{CK(IDD)}$; CKE is HIGH, $\overline{CS}$ is HIGH between valid commands; Address bus inputs are STABLE during DESELECTs; Data pattern is same as IDD4R; - Refer to the following pages for detailed timing conditions		mA	

IDD specification parameters and test conditions

(IDD values are for full operating range of Voltage and Temperature, Notes 1 - 6)

Symbol	Conditions	Max	Units	Notes

NOTE 1 IDD specifications are tested after the device is properly initialized

NOTE 2 Input slew rate is specified by AC Parametric Test Condition NOTE

3 IDD parameters are specified with ODT disabled.

NOTE 4 Data bus consists of DQ, DM, DQS, $\overline{DQS}$, RDQS, $\overline{RDQS}$, LDQS, $\overline{LDQS}$, UDQS, and $\overline{UDQS}$. IDD values must be met with all combinations of EMRS bits 10 and 11.

NOTE 5 For DDR2-667/800 testing, tCK in the Conditions should be interpreted as tCK(avg) NOTE 6

Definitions for IDD

LOW = Vin ≤ VILAC(max)
HIGH = Vin ≥ VIHAC(min)
STABLE = inputs stable at a HIGH or LOW level
FLOATING = inputs at VREF = VDDQ/2
SWITCHING = inputs changing between HIGH and LOW every other clock cycle (once per two clocks) for address and control signals, and inputs changing between HIGH and LOW every other data transfer (once per clock) for DQ signals not including masks or strobes.

IDD testing parameters

For purposes of IDD testing, the parameters in the IDD testing parameters table are to be utilized

Speed	DDR2-800		Unit
Bin(CL-tRCD-tRP)	**5-5-5**	**6-6-6**	
CL(IDD)	5	6	tCK
tRCD(IDD)	12.5	15	ns
tRC(IDD)	57.5	60	ns
tRRD(IDD)-1KB	7.5	7.5	ns
tRRD(IDD)-2KB	10	10	ns
tFAW(IDD)-1KB	35	35	ns
tFAW(IDD)-2KB	45	45	ns
tCK(IDD)	2.5	2.5	ns
tRASmin(IDD)	45	45	ns
tRASmax(IDD)	70000	70000	ns
tRP(IDD)	12.5	15	ns
tRFC(IDD)-2Gb	195	195	ns

AC & DC operating conditions (cont'd)

Detailed IDD7

The detailed timings are shown below for IDD7. changes are made to the specification.

Legend: A = Active; RA = Read with Autoprecharge; D = Deselect

IDD7: Operating Current: All Bank Interleave Read operation

All banks are being interleaved at minimum tRC(IDD) without violating tRRD(IDD) and tFAW(IDD) using a burst length of 4. Control and address bus inputs are STABLE during DESELECTs. IOUT = 0 mA

Timing Pattern

-DDR2-800 : A0 RA0 D D A1 RA1 D D A2 RA2 D D A3 RA3 D D D D A4 RA4 D D A5 RA5 D D A6 RA6 D D A7 RA7 D D D D

Input/output capacitance

Parameter	Symbol	DDR2-800		Units
		Min	Max	
Input capacitance, CK and $\overline{CK}$	CCK	2.0	4.0	pF
Input capacitance delta, CK and $\overline{CK}$	CDCK	X	0.25	pF
Input capacitance, all other input-only pins	CI	2.0	4.0	pF
Input capacitance delta, all other input-only pins	CDI	X	0.25	pF
Input/output capacitance, DQ, DM, DQS, $\overline{DQS}$	CIO	2.5	4.0	pF
Input/output capacitance delta, DQ, DM, DQS, $\overline{DQS}$	CDIO	X	0.5	pF

AC Characteristics (AC operating conditions unless otherwise noted)

Parameter		Symbol	(DDR2-800) -25 Min	Max	Unit	Note
Row Cycle Time		t_{RC}	57.5	-	ns	
Auto Refresh Row Cycle Time		t_{RFC}	195	-	ns	11
Row Active Time		t_{RAS}	45	70K	ns	21
Row Address to Column Address Delay		t_{RCD}	12.5	-	ns	20
Row Active to Row Active Delay		t_{RRD}	10	-	ns	
Four Active to Row Active Delay		t_{FAW}	45	-	ns	
Column Address to Column Address Delay		t_{CCD}	2	-	CLK	
Row Precharge Time		t_{RP}	12.5	-	ns	
Write Recovery Time		t_{WR}	15	-	ns	
Auto Precharge Write Recovery + Precharge Time		t_{DAL}	t_{WR} +t_{RP}	-	ns	12
System Clock Cycle Time	$\overline{CAS}$ Latency = 3	t_{CK}	-	-	ns	2
	$\overline{CAS}$ Latency = 4		3.75	8	ns	2
	$\overline{CAS}$ Latency = 5		2.5	8	ns	2
	$\overline{CAS}$ Latency = 6		2.5	8	ns	2
Clock High Level Width		t_{CH}	0.48	0.52	CLK	
Clock Low Level Width		t_{CL}	0.48	0.52	CLK	
Data-Out edge to Clock edge Skew		t_{AC}	-0.40	0.40	ns	
DQS-Out edge to Clock edge Skew		t_{DQSCK}	-0.35	0.35	ns	
DQS-Out edge to Data-Out edge Skew		t_{DQSQ}	-	0.20	ns	
Data-Out hold time from DQS		t_{QH}	t_{HPmin} -t_{QHS}	-	ns	
Data hold skew factor		t_{QHS}	-	300	ps	
Clock Half Period		t_{HP}	$t_{CH/L}$ min	-	ns	5
Input Setup Time (fast slew rate)		t_{IS}	175	-	ps	15,17
Input Hold Time (fast slew rate)		t_{IH}	250	-	ps	15,17
Input Pulse Width		t_{IPW}	0.60	-	CLK	
Write DQS High Level Width		t_{DQSH}	0.35		CLK	
Write DQS Low Level Width		t_{DQSL}	0.35		CLK	
CLK to First Rising edge of DQS-In		t_{DQSS}	-0.25 t_{CK}	+0.25 t_{CK}	CLK	

Parameter	Symbol	(DDR2-800) -25		Unit	Note
		Min	Max		
Data-In Setup Time to DQS-In (DQ & DM) Differential	t_{DS}	50	-	ps	16,17, 18
Data-in Hold Time to DQS-In (DQ & DM) Differential	t_{DH}	125	-	ps	16,17, 18
DQS falling edge to CLK rising Setup Time	t_{DSS}	0.2	-	CLK	
DQS falling edge from CLK rising Hold Time	t_{DSH}	0.2	-	CLK	
DQ & DM Input Pulse Width	t_{DIPW}	0.35	-	CLK	
Read DQS Preamble Time	t_{RPRE}	0.9	1.1	CLK	
Read DQS Postamble Time	t_{RPST}	0.4	0.6	CLK	
Write DQS Preamble Time	t_{WPRE}	0.35	-	CLK	10
Write DQS Postamble Time	t_{WPST}	0.4	0.6	CLK	10
Internal read to precharge command delay	t_{RTP}	7.5	-	ns	
Internal write to read command delay	t_{WTR}	7.5	-	ns	13
Data out high impedance time from CLK/$\overline{CLK}$	t_{HZ}	-	$t_{AC(max)}$	ns	7
DQS/$\overline{DQS}$ low impedance time from CLK/$\overline{CLK}$	$t_{LZ(DQS)}$	$t_{AC(min)}$	$t_{AC(max)}$	ns	7
DQ low impedance time from CLK/$\overline{CLK}$	$t_{LZ(DQ)}$	$2xt_{AC(min)}$	$t_{AC(max)}$	ns	7
Mode Register Set Delay	t_{MRD}	2	-	CLK	9
MRS command to ODT update delay	t_{MOD}	0	12	ns	
Exit Self Refresh to Non-Read Command	t_{XSNR}	t_{RFC}+10	-	ns	19
Exit Self Refresh to Read Command	t_{XSRD}	200	-	CLK	
Exit Precharge Power Down to any non-Read Command	t_{XP}	2	-	CLK	14
Exit Active Power Down to Read Command	t_{XARD}	2	-	CLK	
Exit Active Power Down to Read Command (Slow exit, Lower Power)	t_{XARDS}	8-AL	-	CLK	
Minimum time clocks remains ON after CKE asynchronously drops LOW	t_{Delay}	tIS+tCK +tIH		ns	
CKE minimum high and low pulse width	t_{CKE}	3	-	CLK	
Average Periodic Refresh Interval 0°C ≤ T_C ≤ 85°C	t_{REFI}	-	7.8	us	18
Average Periodic Refresh Interval 85°C ≤ T_C ≤ 95°C	t_{REFIT}	-	3.9	us	18
Period Jitter	t_{JITPER}	-100	100	ps	22
Duty Cycle Jitter	t_{JITDTY}	-100	100	ps	22
Cycle to Cycle	t_{JITCC}	-200	200	ps	22

Parameter	Symbol	(DDR2-800) -25		Unit	Note
		Min	Max		
Cumulative error, 2 cycles	$t_{ERR(2PER)}$	-150	150	ps	22
Cumulative error, 3 cycles	$t_{ERR(3PER)}$	-175	175	ps	22
Cumulative error, 4 cycles	$t_{ERR(4PER)}$	-200	200	ps	22
Cumulative error, 5 cycles	$t_{ERR(5PER)}$	-200	200	ps	22
Cumulative error, 6-10 cycles	$t_{ERR(6-10PER)}$	-300	300	ps	22
Cumulative error, 11-50 cycles	$t_{ERR(11-50PER)}$	-450	450	ps	22

Notes for Electrical Characteristics & AC Timing

1. Input slew rate is 1 V/ns and AC timings are guarantedd for linear signal transitions.
   For other slew rates see the derating tables on the next pages.
2. The CK / $\overline{CK}$ input reference level (for timing reference to CK / $\overline{CK}$) is the point at which CK and $\overline{CK}$ cross:the DQS / $\overline{DQS}$ input reference level is the crosspoint when in differential strobe mode; the input reference level for signals other than CK/$\overline{CK}$, or DQS / $\overline{DQS}$ is VREF.
3. Inputs are not recognized as valid until VREF stabilizes. During the period before VREF stabilizes, CKE = 0.2 x VDDQ is recognized as LOW.
4. The output timing reference voltage level is VTT.
5. Min (tCL, tCH) refers to the smaller of the actual clock low time and the actual clock high time as provided to the device (i.e. this value can be greater than the minimum specification limits for tCL and tCH.
6. For input frequency change during DRAM operation.
7. t_{HZ} and t_{LZ} transitions occur in the same access time windows as valid data transitions. These parameters are not referred to a specific voltage level, but specify when the device is no longer driving (HZ), or begins driving (LZ).
8. These parameters guarantee device timing, but they are not necessarily tested on each device.
9. The specific requirement is that DQS and $\overline{DQS}$ be valid (HIGH, LOW, or some point on a valid transition) on or before this CK edge. A valid transition is defined as monotonic and meeting the input slew rate specifications of the device. When no writes were previously in progress on the bus, DQS will be transitioning from Hi-Z to logic LOW. If a previous write was in progress, DQS could be HIGH, LOW, or transitioning from HIGH to LOW at this time, depending on t_{DQSS}. When programmed in differential strobe mode, DQS is always the logic complement of DQS except when both are in high-Z.
10. The maximum limit for this parameter is not a device limit. The device operate with a greater value for this parameter, but system performance (bus turnaround) degrades accordingly.
11. A maximum of eight Auto-Refresh commands can be posted to any given DDR2 SDRAM device.
    (Note : tRFC depends on DRAM density)
12. For each of the terms, if not allready an integer, round to the next highest integer. tCK refers to the application clock period. WR refers to the WR parameter stored in the MRS.
13. tWTR is at least two clocks independent of operation frequency.
14. User can choose two different active power-down modes for additional power saving via MRS address bit A12.
    In "standard active power-down mode" (MRS, A12 = "0") a fast power-down exit timing tXARD can be used. In "low active power-down mode" (MRS, A12 ="1") a slow power-down exit timing tXARDS has to be satisfied.
15. Timings are guaranteed with command / address input slew rate of 1.0 V/ns.
16. Timings are guaranteed with data / mask input slew rate of 1.0 V/ns.
17. Timings are guaranteed with CK /$\overline{CK}$ differential slew rate 2.0 V/ns, and DQS/$\overline{DQS}$ (and RDQS/$\overline{RDQS}$) differential slew rate 2.0 V/ns in differential strobe mode.
18. If refresh timing or tDS / tDH is violated, data corruption may occur and the data must be re-written with valid data before a valid READ can be executed.
19. In all circumstances, tXSNR can be satisfied using tXSNR = tRFC + 10 ns.
20. The tRCD timing parameter is valid for both activate command to read or write command with and without Auto-Precharge. Therefore a separate parameter tRAP for activate command to read or write command with Auto-Precharge is not neccessary anymore.
21. tRAS(max) is calculated from the maximum amount of time a DDR2 device can operate without a Refresh command which is equal to 9 * tREFI.

Reference Loads, Slew Rates and Slew Rate Derating Reference Load

for Timing Measurements

The figure represents the timing reference load used in defining the relevant timing parameters of the device. It is not intended to either a precise representation of the typical system environment nor a depiction of the actual load presented by a production tester. System designers will use IBIS or other simulation tools to correlate the timing reference load to a system environment. This load circuit is also used for output slew rate measurements.

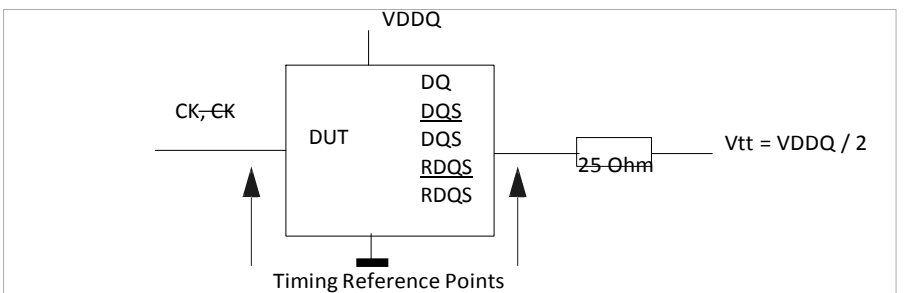

Note: The output timing reference voltage level for single ended signals is the cross point with VTT.
The output timing reference voltage level for differential signals is the cross point of the true (e.g. DQS) and the complement (e.g. DQS) signal.

Slew Rate Measurements

Output slew rate is characterized under the test conditions as shown in the figure below

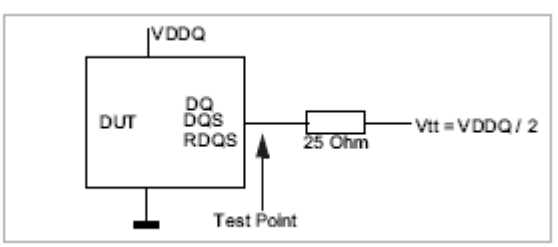

Output slew rate for falling and rising edges is measured between VTT - 250 mV and VTT + 250 mV for single ended signals. For differential signals (e.g. DQS - DQS) output slew rate is measured between DQS - DQS = - 500 mV and DQS - DQS = + 500 mV. Output slew rate is guaranteed by design, but is not necessarily tested on each device.

Input Slew Rate

Input slew for single ended signals is measured from dc-level to ac-level from VREF to VIH (AC), min for rising and from VREF to VIL (AC), min or falling edges.
For differential signals (e.g. CK - CK) slew rate for rising edges is measured from CK - CK = -250 mV to CK -CK = +500 mV (250 mV to -500 mV for falling edges). Test conditions are the same as for timing measurements.

Package Diagram (x16) ***84-Ball Fine Pitch Ball Grid Array Outline***

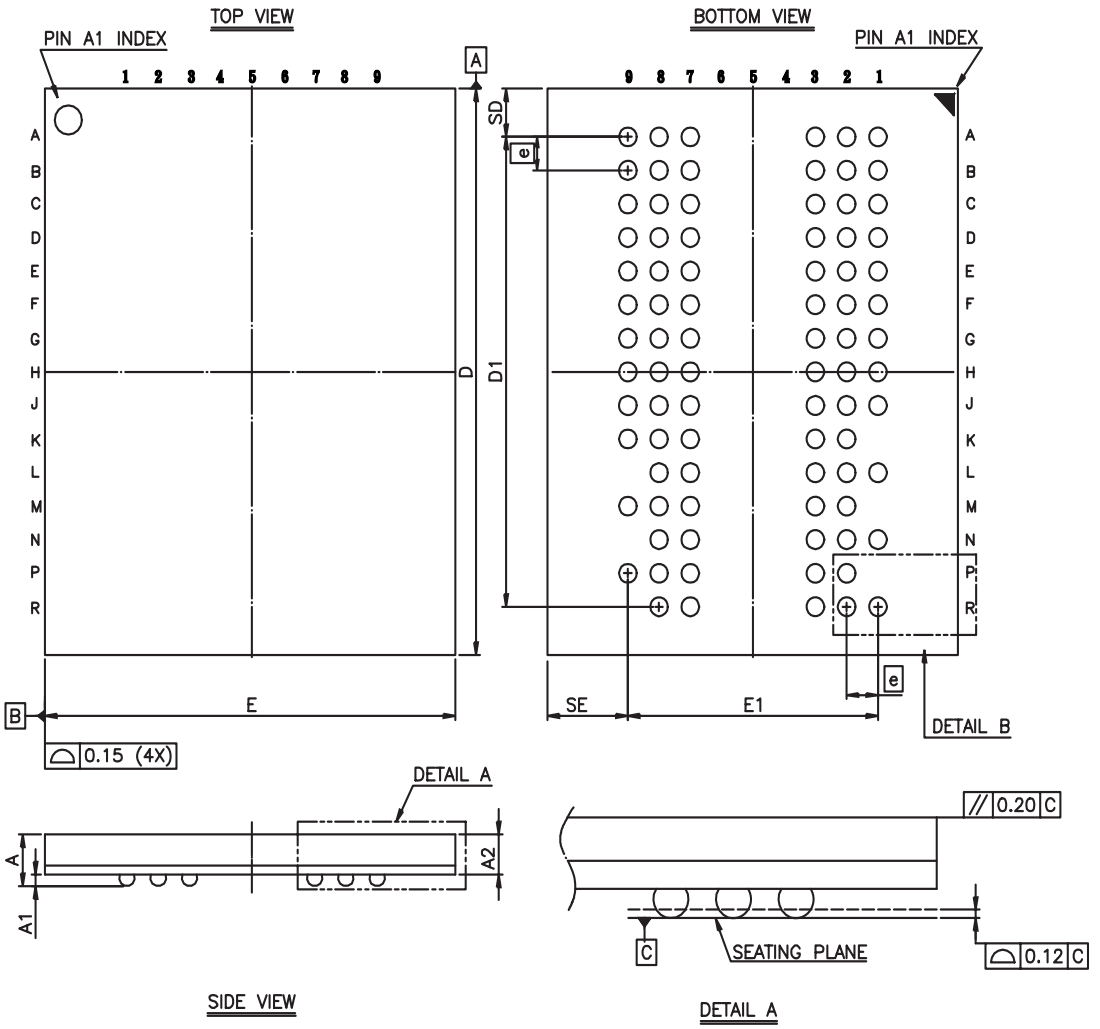

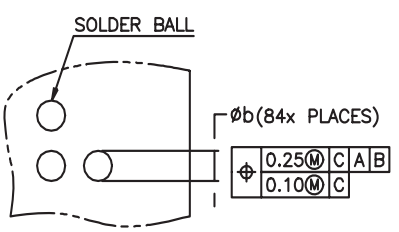

DETAIL B

SYM.	DIMENSION (mm)			DIMENSION (inch)		
	MIN.	NOM.	MAX.	MIN.	NOM.	MAX.
A	—	—	1.20	—	—	0.047
A1	0.30	0.35	0.40	0.012	0.014	0.016
A2	—	0.76	—	—	0.030	—
b	0.40	0.45	0.50	0.016	0.018	0.020
D	13.40	13.50	13.60	0.528	0.531	0.535
D1	11.20 BSC			0.441 BSC		
E	10.40	10.50	10.60	0.409	0.413	0.417
E1	6.40 BSC			0.252 BSC		
SD	1.15 BSC			0.045 BSC		
SE	2.05 BSC			0.081 BSC		
e	0.80 BSC			0.031 BSC		

NOTE:
1. CONTROLLING DIMENSION : MILLIMETER.

Alliance Memory Inc. reserves the rights to change the specifications and products without notice.

Alliance Memory, Inc., 551 Taylor Way, Suite #1, San Carlos, CA 94070, USA
Tel: +1 650 610 6800 Fax: +1 650 620 9211

Компания «ЭлектроПласт» предлагает заключение долгосрочных отношений при поставках импортных электронных компонентов на взаимовыгодных условиях!

Наши преимущества:

- Оперативные поставки широкого спектра электронных компонентов отечественного и импортного производства напрямую от производителей и с крупнейших мировых складов;
- Поставка более 17-ти миллионов наименований электронных компонентов;
- Поставка сложных, дефицитных, либо снятых с производства позиций;
- Оперативные сроки поставки под заказ (от 5 рабочих дней);
- Экспресс доставка в любую точку России;
- Техническая поддержка проекта, помощь в подборе аналогов, поставка прототипов;
- Система менеджмента качества сертифицирована по Международному стандарту ISO 9001;
- Лицензия ФСБ на осуществление работ с использованием сведений, составляющих государственную тайну;
- Поставка специализированных компонентов (Xilinx, Altera, Analog Devices, Intersil, Interpoint, Microsemi, Aeroflex, Peregrine, Syfer, Eurofarad, Texas Instrument, Miteq, Cobham, E2V, MA-COM, Hittite, Mini-Circuits,General Dynamics и др.);

Помимо этого, одним из направлений компании «ЭлектроПласт» является направление «Источники питания». Мы предлагаем Вам помощь Конструкторского отдела:

- Подбор оптимального решения, техническое обоснование при выборе компонента;
- Подбор аналогов;
- Консультации по применению компонента;
- Поставка образцов и прототипов;
- Техническая поддержка проекта;
- Защита от снятия компонента с производства.

Как с нами связаться

Телефон: 8 (812) 309 58 32 (многоканальный)
Факс: 8 (812) 320-02-42
Электронная почта: org@eplast1.ru
Адрес: 198099, г. Санкт-Петербург, ул. Калинина, дом 2, корпус 4, литера А.