Littelfuse®
Expertise Applied | Answers Delivered

AUMOV™ Varistor Series

RoHS Pb HF

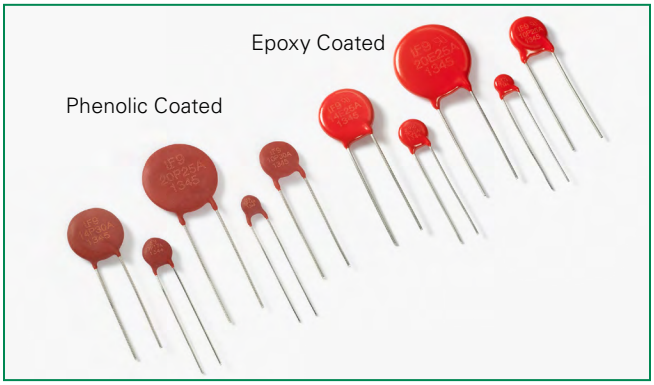

Agency Approvals

Agency	Agency File Number
	E320116 (only Epoxy coated)

Note: All Phenolic coating parts are in compliance with AEC–Q200 (Table 10).

Description

The Littelfuse AUMOV™ Varistor Series of low voltage, high surge current, radial leaded varistors provides an ideal circuit protection for load dump, jump start voltage transient conditions specifically for automotive applications.

The maximum peak surge current rating is rated up to 5kA (8/20 µs pulse) to protect sensitive infotainment systems from voltage transients. This AEC-Q200 (Table 10) compliant series is available in five disc sizes: 5mm, 7mm, 10mm, 14mm and 20mm; it features a wide VDC voltage range from 16V to 50V.

Features

- Meets the stringent quality standards of AEC-Q200 (Table 10)
- Breakthrough in low voltage varistor design provides high peak surge current rating
- Reduced footprint and volume required for surge protection
- Optional phenolic coating for higher operating temperature up to 125°C
- High peak surge current rating up to 5kA (8/20 µs pulse)
- Wide operating voltage range: 14VAC to 42VAC and 16VDC to 50VDC
- Five disc sizes available: 5, 7, 10, 14, and 20mm
- High resistance to thermal cycles for phenolic coating
- High energy absorption particularly for automotive load dump and jump start
- Lead–free, Halogen-Free and RoHS compliant

Applications

- Body Electronics Systems
- Powertrain Systems
- Infotainment Systems
- Automotive Control Module Protection
- Motor or inductive load transient suppression

Absolute Maximum Ratings

• For ratings of individual members of a series, see Device Ratings and Specifications chart

	Low Voltage Series	Units
Continous:		
Steady State Applied Voltage:		
AC Voltage Range ($V_{M(AC)RMS}$)	14 to 42	V
DC Voltage Range ($V_{M(DC)}$)	16 to 50	V
Transient:		
Non-Repetitive Surge Current, 8/20µs Waveform (I_{TM})	400 to 5,000	A
Non-Repetitive Energy Capability, 2ms Waveform (W_{TM})	1.0 to 140	J
Operating Ambient Temperature Range (T_A) for Epoxy coated	-40 to +85	°C
Operating Ambient Temperature Range (T_A) for Phenolic coated	-40 to +125	°C
Storage Temperature Range (T_{STG}) for Epoxy coated	-40 to +125	°C
Storage Temperature Range (T_{STG}) for Phenolic coated	-40 to +150	°C
Temperature Coefficient (αV) of Clamping Voltage (V_C) at Specified Test Current	< 0.01%	°C
Hi-Pot Encapsulation (Isolation Voltage Capability) for Epoxy coated	2500	V
Hi-Pot Encapsulation (Isolation Voltage Capability) for Phenolic coated	500	V
Epoxy Coating Insulation Resistance	>1,000	MΩ

CAUTION: Stresses above those listed in "Absolute Maximum Ratings" may cause permanent damage to the device. This is a stress only rating and operation of the device at these or any other conditions above those indicated in the operational sections of this specification is not implied.

© 2015 Littelfuse, Inc.
Specifications are subject to change without notice.
Revised: 05/08/15

AUMOV™ Varistor Series Device Ratings & Specifications

Epoxy Coated Models		Phenolic Coated Models		Size Disc Dia. (mm)	Max Continuous Voltage		Varistor Voltage at 1mA			Maximum Clamping Voltage		Max Peak Current (8 x 20μs 1 pulse)	Energy Rating (2ms, 1 pulse)	Energy (Load Dump, 10 pulses)*	Jump Start DC V_{jump} (5 min)	Typical Capacitance f = 1MHz
Part Number (Base part)	Branding	Part Number (Base part)	Branding		V_{RMS}	V_{DC}	Min	Nom	Max	V_C	I_{PK}	I_{TM}	W_{TM}			
					(V)	(V)	(V)	(V)	(V)	(V)	(A)	(A)	(J)	(J)	(V)	(pF)
V05E14AUTO	5E14A	V05P14AUTO	5P14A	5	14	16	19.8	22	24.2	43	1	400	1	6	25	1100
V07E14AUTO	7E14A	V07P14AUTO	7P14A	7	14	16	19.8	22	24.2	43	2.5	800	2.2	12	25	2450
V10E14AUTO	10E14A	V10P14AUTO	10P14A	10	14	16	19.8	22	24.2	43	5	1500	5	25	25	4650
V14E14AUTO	14E14A	V14P14AUTO	14P14A	14	14	16	19.8	22	24.2	43	10	3000	10	50	25	10200
V20E14AUTO	20E14A	V20P14AUTO	20P14A	20	14	16	19.8	22	24.2	43	20	5000	28	100	25	22200
V05E17AUTO	5E17A	V05P17AUTO	5P17A	5	17	20	24.3	27	29.7	53	1	400	1.4	6	30	950
V07E17AUTO	7E17A	V07P17AUTO	7P17A	7	17	20	24.3	27	29.7	53	2.5	800	2.8	12	30	2100
V10E17AUTO	10E17A	V10P17AUTO	10P17A	10	17	20	24.3	27	29.7	53	5	1500	6.5	25	30	3900
V14E17AUTO	14E17A	V14P17AUTO	14P17A	14	17	20	24.3	27	29.7	53	10	3000	13	50	30	8700
V20E17AUTO	20E17A	V20P17AUTO	20P17A	20	17	20	24.3	27	29.7	53	20	5000	35	100	30	18750
V05E25AUTO	5E25A	V05P25AUTO	5P25A	5	25	28	35.1	39	42.9	77	1	400	2.5	6	40	750
V07E25AUTO	7E25A	V07P25AUTO	7P25A	7	25	28	35.1	39	42.9	77	2.5	800	5.5	12	40	1500
V10E25AUTO	10E25A	V10P25AUTO	10P25A	10	25	28	35.1	39	42.9	77	5	1500	13	25	40	2900
V14E25AUTO	14E25A	V14P25AUTO	14P25A	14	25	28	35.1	39	42.9	77	10	3000	25	50	40	6200
V20E25AUTO	20E25A	V20P25AUTO	20P25A	20	25	28	35.1	39	42.9	77	20	5000	77	100	40	13500
V05E30AUTO	5E30A	V05P30AUTO	5P30A	5	30	34	42.3	47	51.7	93	1	400	3.1	6	45	650
V07E30AUTO	7E30A	V07P30AUTO	7P30A	7	30	34	42.3	47	51.7	93	2.5	800	7	12	45	1350
V10E30AUTO	10E30A	V10P30AUTO	10P30A	10	30	34	42.3	47	51.7	93	5	1500	15.5	25	45	2550
V14E30AUTO	14E30A	V14P30AUTO	14P30A	14	30	34	42.3	47	51.7	93	10	3000	32	50	45	5550
V20E30AUTO	20E30A	V20P30AUTO	20P30A	20	30	34	42.3	47	51.7	93	20	5000	90	100	45	12000
V05E42AUTO	5E42A	V05P42AUTO	5P42A	5	42	50	61.2	68	74.8	135	1	400	5	6	55	500
V07E42AUTO	7E42A	V07P42AUTO	7P42A	7	42	50	61.2	68	74.8	135	2.5	800	11	12	55	1000
V10E42AUTO	10E42A	V10P42AUTO	10P42A	10	42	50	61.2	68	74.8	135	5	1500	25	25	55	1850
V14E42AUTO	14E42A	V14P42AUTO	14P42A	14	42	50	61.2	68	74.8	135	10	3000	50	50	55	4000
V20E42AUTO	20E42A	V20P42AUTO	20P42A	20	42	50	61.2	68	74.8	135	20	5000	140	100	55	8500

Note: 1. Average power dissipation of transients not to exceed 0.2W, 0.25W, 0.4W, 0.6W or 1W for model sizes 5mm, 7mm, 10mm, 14mm and 20mm, respectively.
*2. Energy rating (auto load dump) for impulse duration of 40ms minimum to one half of peak current, 60sec interval ISO7637-2 pulse 5a and ISO16750-2 Table 5A.
3. The shift of Vnom (Varistor Volatge) may be to +/-15% for Load dump or Jump Start test.

© 2015 Littelfuse, Inc.
Specifications are subject to change without notice.

Current Energy and Power Dissipation Ratings

Figure 1A - Power Derating for Epoxy Coated

For applications exceeding 85°C ambient temperature, the peak surge current and energy ratings must be reduced as shown below.

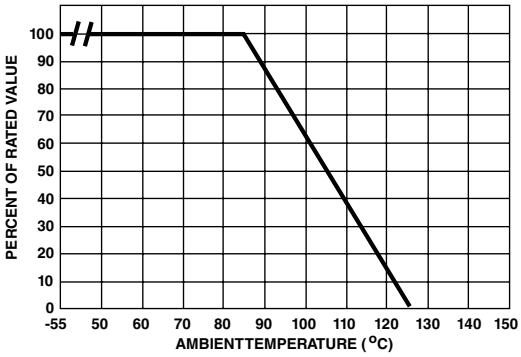

Figure 1B - Power Derating for Phenolic Coated

For applications exceeding 125°C ambient temperature, the peak surge current and energy ratings must be reduced as shown below.

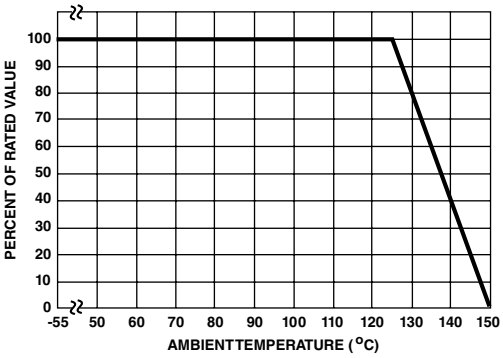

Peak Pulse Current Test Waveform for Clamping Voltage

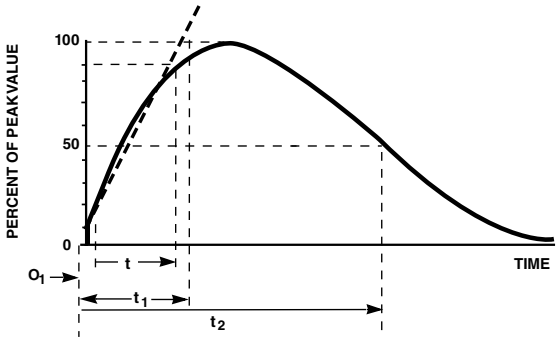

Figure 2: Peak Pulse Current Test Waveform for Clamping Voltage

0_1 = Virtual Origin of Wave
t = Time from 10% to 90% of Peak
t_1 = Virtual Front Time = 1.25 x t
t_2 = Virtual Time to Half-Value (Impulse Duration)

Example - For an 8/20 μs Current Waveform:
8μs = t_1 = Virtual Front Time
20μs = t_2 = Virtual Time to Half-Value

© 2015 Littelfuse, Inc.
Specifications are subject to change without notice.
Revised: 05/08/15

Maximum Clamping Voltage for 5mm Parts

V05x14AUTO - V05x42AUTO

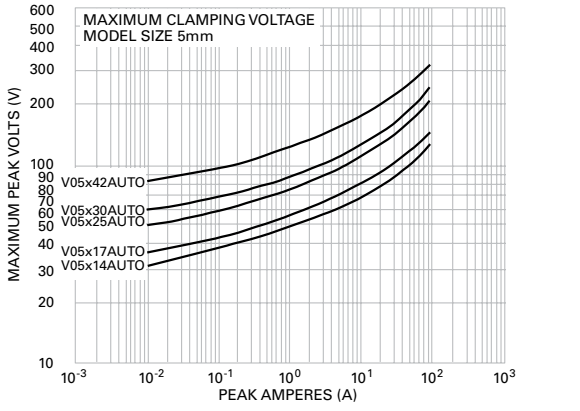

Maximum Clamping Voltage for 7mm Parts

V07x14AUTO - V07x42AUTO

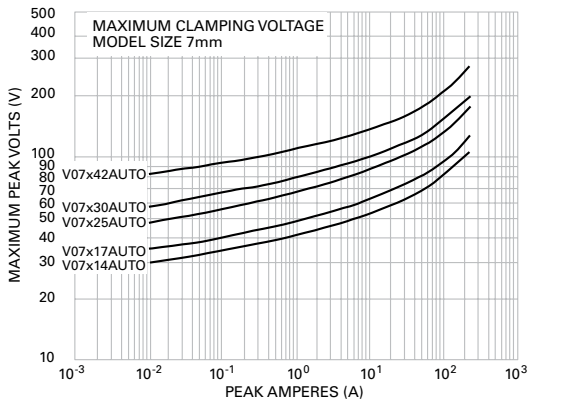

Maximum Clamping Voltage for 10mm Parts

V10x14AUTO - V10x42AUTO

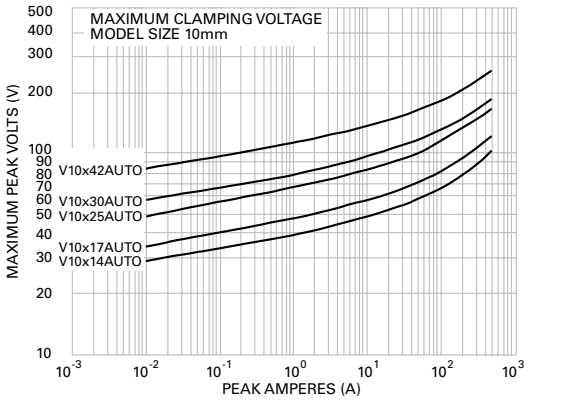

Maximum Clamping Voltage for 14mm Parts

V14x14AUTO - V14x42AUTO

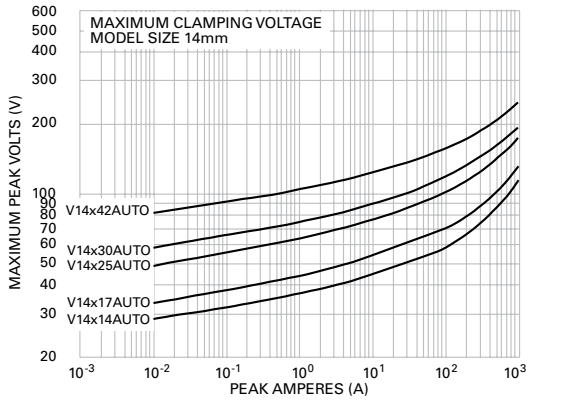

Maximum Clamping Voltage for 20mm Parts

V20x14AUTO - V20x42AUTO

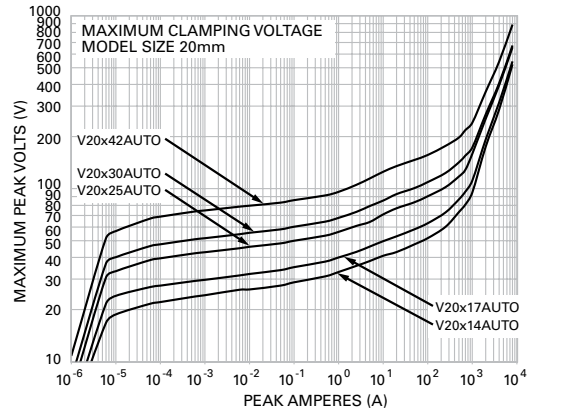

© 2015 Littelfuse, Inc.
Specifications are subject to change without notice.

Repetitive Surge Capability for 5mm Parts

V05x14AUTO – V05x42AUTO

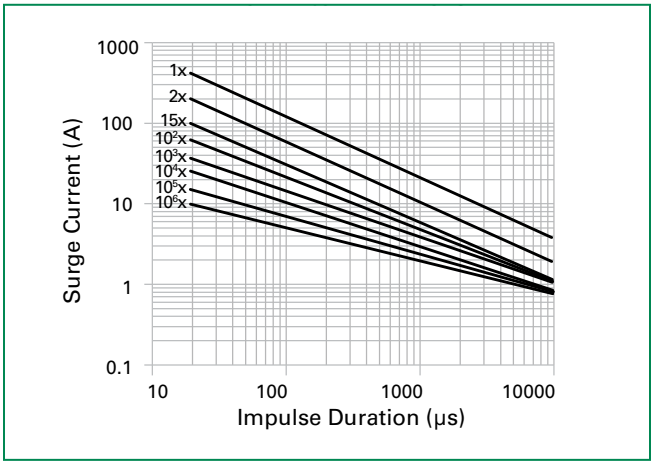

Repetitive Surge Capability for 7mm Parts

V07x14AUTO – V07x42AUTO

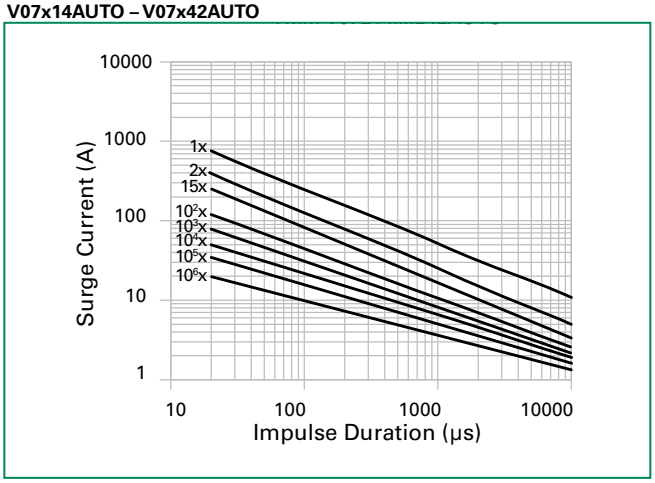

Repetitive Surge Capability for 10mm Parts

V10x14AUTO – V10x42AUTO

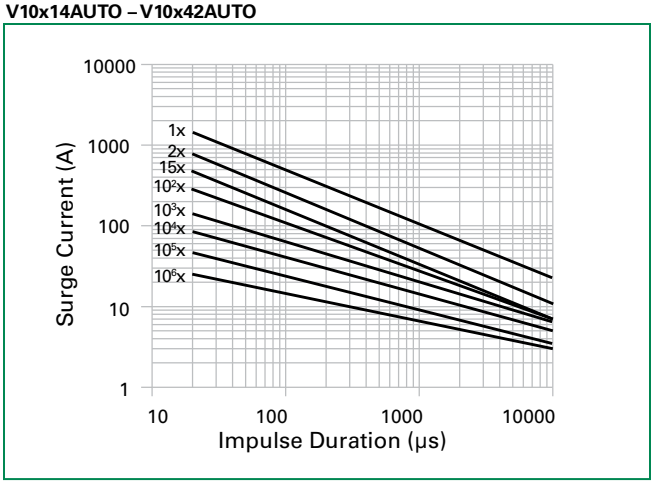

Repetitive Surge Capability for 14mm Parts

V14x14AUTO – V14x42AUTO

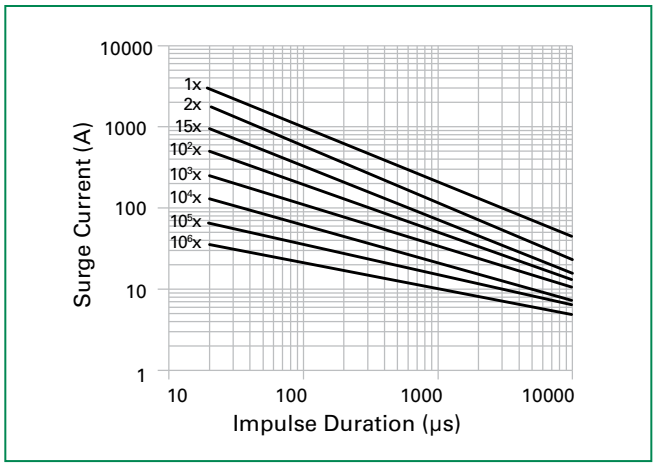

Repetitive Surge Capability for 20mm Parts

V020x14AUTO – V20x42AUTO

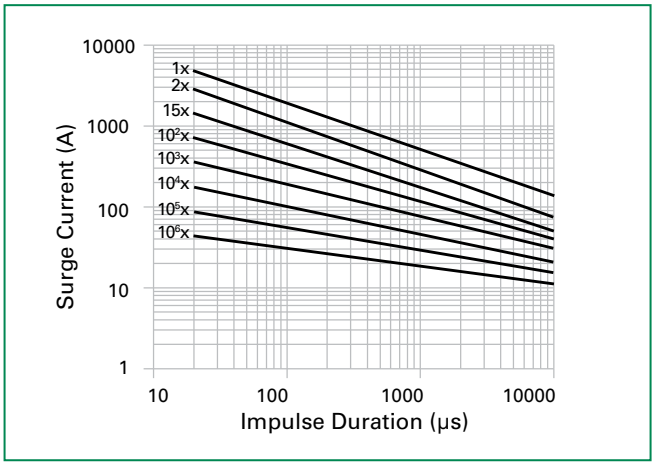

NOTE: If pulse ratings are exceeded, a shift of $V_{N(DC)}$ (at specified current) of more then +/-10% could result. This type of shift, which normally results in a decrease of $V_{N(DC)}$, may result in the device not meeting the original published specifications, but does not prevent the device from continuing to function, and to provide ample protection.

© 2015 Littelfuse, Inc.
Specifications are subject to change without notice.
Revised: 05/08/15

Wave Solder Profile

Non Lead–free Profile

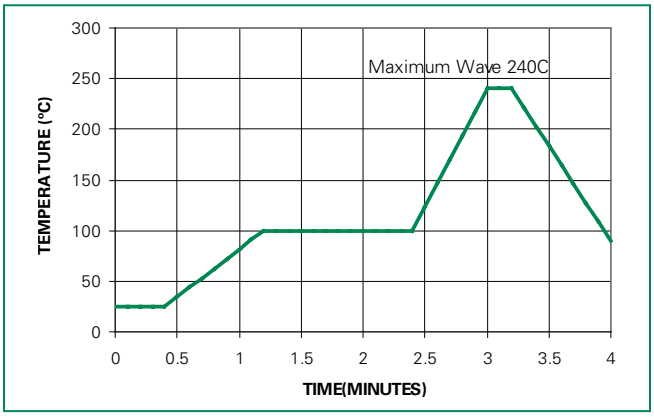

Lead–free Profile

Physical Specifications

Lead Material	Copper Clad Steel Wire
Soldering Characteristics	Solderability per MIL–STD–202, Method 208
Insulating Material	Cured, flame retardant epoxy polymer meets UL94V–0 requirements
Device Labeling	Marked with LF, voltage and date code

Environmental Specifications

Humidity Aging	+85°C, 85% RH,1000 hours +/-10% typical voltage change
Thermal Shock	+85°C to -40°C 10 times +/-10% typical voltage change
Solvent Resistance	MIL–STD–202, Method 215
Moisture Sensitivity	Level 1, J-STD-020

© 2015 Littelfuse, Inc.
Specifications are subject to change without notice.

Littelfuse®
Expertise Applied | Answers Delivered

Product Dimensions (mm)

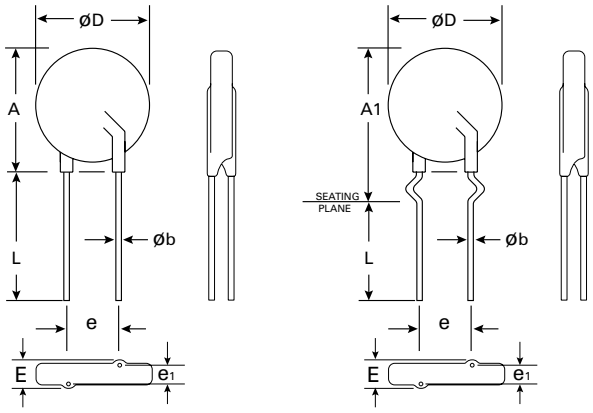

Dimen-sion	V_{RMS} Voltage Model	5mm Size		7mm Size		10mm Size		14mm Size		20mm Size	
		Min. mm (in)	Max. mm (in)	Min. mm (in)	Max. mm (in)	Min. mm (in)	Max. mm (in)	Min. mm (in)	Max. mm (in)	Min. mm (in)	Max. mm (in)
A	All	-	10 (0.394)	-	12 (0.472)	-	16 (0.630)	-	20 (0.787)	-	26.5 (1.043)
A1	All	-	13 (0.512)	-	15 (0.591)	-	19.5 (0.768)	-	22.5 (0.886)	-	29 (1.142)
ØD	All	-	7 (0.276)	-	9 (0.354)	-	12.5 (0.492)	-	17 (0.669)	-	23 (0.906)
e	All	4 (0.157)	6 (0.236)	4 (0.157)	6 (0.236)	6.5 (0.256)	8.5 (0.335)	6.5 (0.256)	8.5 (0.335)	6.5 (0.256)	8.5 (0.335)
e_1	11 - 30	1 (0.039)	3 (0.118)	1 (0.039)	3 (0.118)	1 (0.039)	3 (0.118)	1 (0.039)	3 (0.118)	1 (0.039)	3 (0.118)
	35 - 40	1.5 (0.059)	3.5 (0.138)	1.5 (0.059)	3.5 (0.138)	1.5 (0.059)	3.5 (0.138)	1.5 (0.059)	3.5 (0.138)	1.5 (0.059)	3.5 (0.138)
E	11 - 30	-	5.0 (0.197)	-	5.0 (0.197)	-	5.0 (0.197)	-	5.0 (0.197)	-	5.0 (0.197)
	35 - 40	-	5.6 (0.220)	-	5.6 (0.220)	-	5.6 (0.220)	-	5.6 (0.220)	-	5.6 (0.220)
Øb	All	0.585 (0.023)	0.685 (0.027)	0.585 (0.023)	0.685 (0.027)	0.76 (0.030)	0.86 (0.034)	0.76 (0.030)	0.86 (0.034)	0.76 (0.030)	0.86 (0.034)
L	All	25.4 (1.00)	-	25.4 (1.00)	-	25.4 (1.00)	-	25.4 (1.00)	-	25.4 (1.00)	-
L_{TRIM}	All	2.41 (0.095)	4.69 (0.185)	2.41 (0.095)	4.69 (0.185)	2.41 (0.095)	4.69 (0.185)	2.41 (0.095)	4.69 (0.185)	2.41 (0.095)	4.69 (0.185)

© 2015 Littelfuse, Inc.
Specifications are subject to change without notice.
Revised: 05/08/15

Tape and Reel Specifications

5 and 7mm Devices

STRAIGHT LEADS "L1"

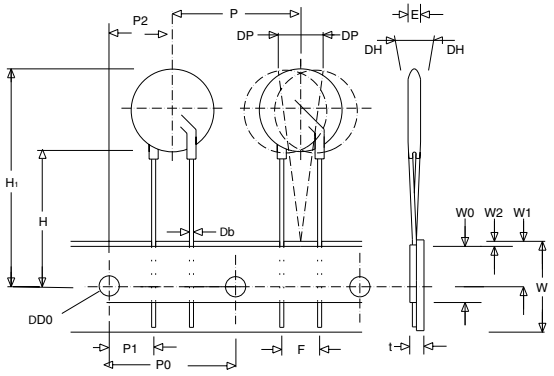

CRIMPED LEADS "L2"

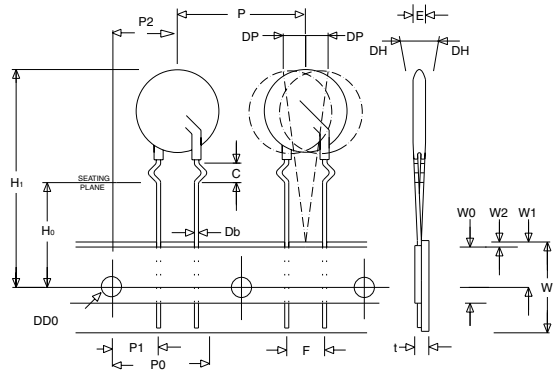

UNDER CRIMPED / IN-LINE LEADS "L3"

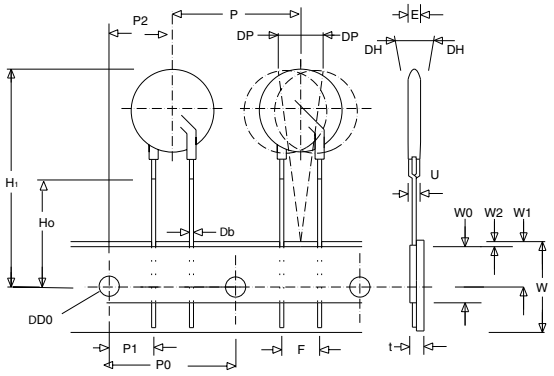

10, 14 and 20mm Devices

STRAIGHT LEADS "L1"

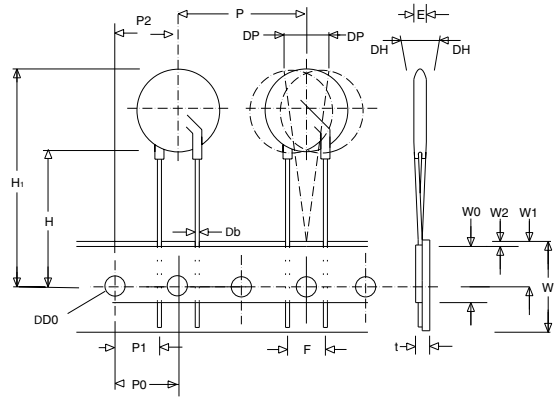

CRIMPED LEADS "L2"

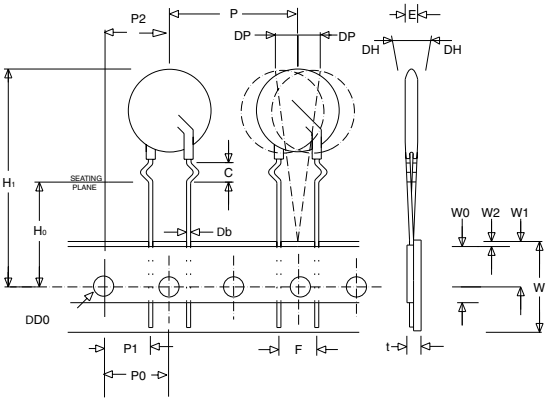

UNDER CRIMPED / IN-LINE LEADS "L3"

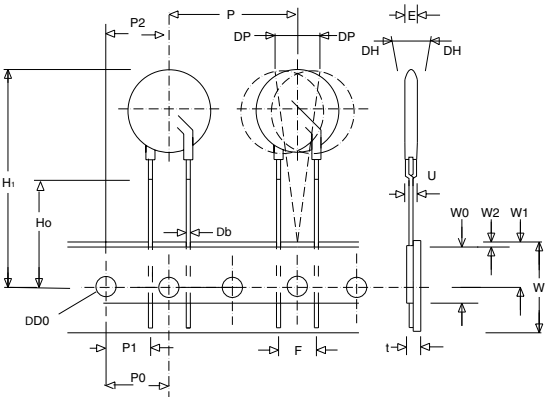

Refer to next page for dimension measurement specifics.

© 2015 Littelfuse, Inc.
Specifications are subject to change without notice.
Revised: 05/08/15

Tape and Reel Specifications (continued)

NOTES:
- Radial devices on tape are supplied with crimped leads, straight leads, or under-crimped leads
- Leads are offset by product dimension e1
- Conforms to ANSI and EIA specifications
- Can be supplied to IEC Publication 286-2

SYMBOL	DESCRIPTION	MODEL SIZE				
		5mm	7mm	10mm	14mm	20mm
P	Pitch of Component	12.7 +/- 1.0	12.7 +/- 1.0	25.4 +/- 1.0	25.4 +/- 1.0	25.4 +/- 1.0
P_0	Feed Hole Pitch	12.7 +/- 0.2	12.7 +/- 0.2	12.7 +/- 0.2	12.7 +/- 0.2	12.7 +/- 0.2
P_1	Feed Hole Center to Pitch	3.85 +/- 0.7	3.85 +/- 0.7	8.85 +/- 0.7	8.85 +/- 0.7	8.85 +/- 0.7
P_2	Hole Center to Component Center	6.35 +/- 1.0	6.35 +/- 1.0	12.7 +/- 0.7	12.7 +/- 0.7	12.7 +/- 0.7
F	Lead to Lead Distance	5.0 +/- 1.0	5.0 +/-1.0	7.5 +/- 1.0	7.5 +/- 1.0	7.5 +/- 1.0
h	Component Alignment	2.0 Max	2.0 Max	2.0 Max	2.0 Max	2.0 Max
W	Tape Width	18.0 +1.0 / -0.5	18.0 +1.0 / -0.5	18.0 +1.0 / -0.5	18.0 +1.0 / -0.5	18.0 +1.0 / -0.5
W_0	Hold Down Tape Width	12.0 +/- 0.3	12.0 +/- 0.3	12.0 +/- 0.3	12.0 +/- 0.3	12.0 +/- 0.3
W_1	Hole Position	9.0 +0.75 / -0.50	9.0 +0.75 / -0.50	9.0 +0.75 / -0.50	9.0 +0.75 / -0.50	9.0 +0.75 / -0.50
W_2	Hold Down Tape Position	0.5 Max	0.5 Max	0.5 Max	0.5 Max	0.5 Max
H	Height from Tape Center to Component Base	18.0 +2.0 / -0.0	18.0 +2.0 / -0.0	18.0 +2.0 / -0.0	18.0 +2.0 / -0.0	18.0 +2.0 / -0.0
H_0	Seating Plane Height	16.0 +/- 0.5	16.0 +/- 0.5	16.0 +/- 0.5	16.0 +/- 0.5	16.0 +/- 0.5
H_1	Component Height	29.0 Max	32.0 Max	36.0 Max	40.0 Max	46.5 Max
D_0	Feed Hole Diameter	4.0 +/- 0.2	4.0 +/- 0.2	4.0 +/- 0.2	4.0 +/- 0.2	4.0 +/- 0.2
t	Total Tape Thickness	0.7 +/- 0.2	0.7 +/- 0.2	0.7 +/- 0.2	0.7 +/- 0.2	0.7 +/- 0.2
U	Undercrimp Width	8.0 Max	8.0 Max	8.0 Max	8.0 Max	8.0 Max
p	Component Alignment	3° Max	3° Max	3° Max	3° Max	3° Max

Part Numbering System

V 05 E 14 AUTO L1 B XXXXX

Littelfuse Varistor

Disc Size
05, 07, 10, 14 or 20 mm

Coating
E: Epoxy
P: Phenolic

VM(AC)RMS
14V to 42V

AUMOV™ Series
Lead-Free, RoHS and Halogen free Compliant

Lead Formation
Blank or L1: Straight
L2: Crimped
L3: In-Line
L4: Trim/Crimp (Bulk pack only)

Packaging
Blank or B: Bulk Pack
T: Tape and Reel
A: Ammo Pack

Other Non-Standard Options

© 2015 Littelfuse, Inc.
Specifications are subject to change without notice.
Revised: 05/08/15

Компания «ЭлектроПласт» предлагает заключение долгосрочных отношений при поставках импортных электронных компонентов на взаимовыгодных условиях!

Наши преимущества:

- Оперативные поставки широкого спектра электронных компонентов отечественного и импортного производства напрямую от производителей и с крупнейших мировых складов;
- Поставка более 17-ти миллионов наименований электронных компонентов;
- Поставка сложных, дефицитных, либо снятых с производства позиций;
- Оперативные сроки поставки под заказ (от 5 рабочих дней);
- Экспресс доставка в любую точку России;
- Техническая поддержка проекта, помощь в подборе аналогов, поставка прототипов;
- Система менеджмента качества сертифицирована по Международному стандарту ISO 9001;
- Лицензия ФСБ на осуществление работ с использованием сведений, составляющих государственную тайну;
- Поставка специализированных компонентов (Xilinx, Altera, Analog Devices, Intersil, Interpoint, Microsemi, Aeroflex, Peregrine, Syfer, Eurofarad, Texas Instrument, Miteq, Cobham, E2V, MA-COM, Hittite, Mini-Circuits,General Dynamics и др.);

Помимо этого, одним из направлений компании «ЭлектроПласт» является направление «Источники питания». Мы предлагаем Вам помощь Конструкторского отдела:

- Подбор оптимального решения, техническое обоснование при выборе компонента;
- Подбор аналогов;
- Консультации по применению компонента;
- Поставка образцов и прототипов;
- Техническая поддержка проекта;
- Защита от снятия компонента с производства.

Как с нами связаться

Телефон: 8 (812) 309 58 32 (многоканальный)
Факс: 8 (812) 320-02-42
Электронная почта: org@eplast1.ru
Адрес: 198099, г. Санкт-Петербург, ул. Калинина, дом 2, корпус 4, литера А.