Programmable Digital Gyroscope Sensor

Data Sheet

ADIS16260/ADIS16265

FEATURES

Yaw rate gyroscope with range scaling
- **±80°/sec, ±160°/sec, and ±320°/sec settings**

No external configuration required to start data collection
- **Start-up time: 165 ms**
- **Sleep mode recovery time: 2.5 ms**

Factory-calibrated sensitivity and bias
- **ADIS16265 calibration temperature range: −40°C to +85°C**
- **ADIS16260 calibration temperature: +25°C**

SPI-compatible serial interface
Relative angle displacement output
Embedded temperature sensor
Programmable operation and control
- **Automatic and manual bias correction controls**
- **Sensor bandwidth selection: 50 Hz/330 Hz**
- **Sample rate: 256 SPS/2048 SPS settings**
- **Bartlett window FIR filter length, number of taps**
- **Digital I/O: data ready, alarm indicator, general-purpose**
- **Alarms for condition monitoring**
- **Sleep mode for power management**
- **DAC output voltage**
- **Single-command self-test**

Single-supply operation: 4.75 V to 5.25 V
- **3.3 V compatible digital lines**

2000 *g* shock survivability
Operating temperature range: −40°C to +105°C

APPLICATIONS

Platform control and stabilization
Navigation
Medical instrumentation
Robotics

GENERAL DESCRIPTION

The ADIS16260 and the ADIS16265 are programmable digital gyroscopes that combine industry-leading MEMS and signal processing technology in a single compact package. They provide accuracy performance that would require full motion calibration with any other MEMS gyroscope in their class. When power is applied, the ADIS16260 and the ADIS16265 automatically start up and begin sampling sensor data, without requiring configuration commands from a system processor. An addressable register structure and a common serial peripheral interface (SPI) provide simple access to sensor data and configuration settings. Many digital processor platforms support the SPI with simple firmware-level instructions.

The ADIS16260 and the ADIS16265 provide several programmable features for in-system optimization. The sensor bandwidth switch (50 Hz and 330 Hz), Bartlett window FIR filter length, and sample rate settings provide users with controls that enable noise vs. bandwidth optimization. The digital input/output lines offer options for a data ready signal that helps the master processor efficiently manage data coherency, an alarm indicator signal for triggering master processor interrupts, and a general-purpose function for setting and monitoring system-level digital controls/conditions.

The ADIS16260 and the ADIS16265 come in a LGA package (11.2 mm × 11.2mm × 5.5 mm), which supports Pb-free solder reflow assembly, in accordance with JEDEC J-STD-020. They have an extended operating temperature range of −40°C to +105°C.

FUNCTIONAL BLOCK DIAGRAM

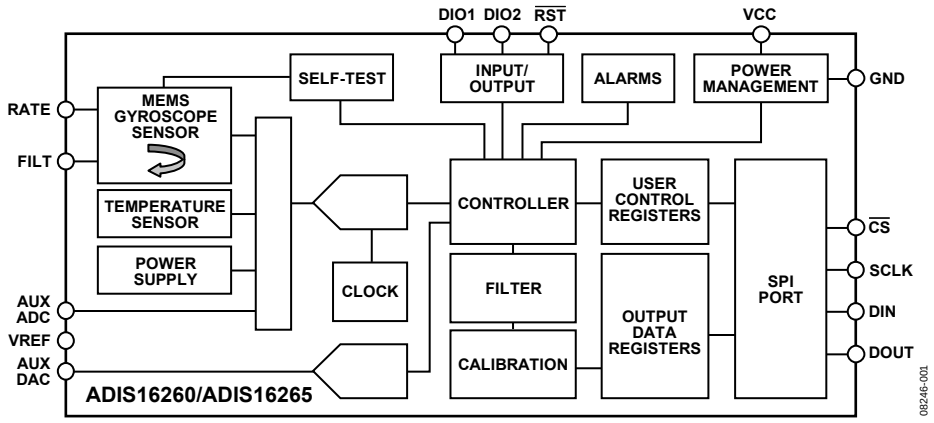

Figure 1.

Rev. F
Document Feedback

Information furnished by Analog Devices is believed to be accurate and reliable. However, no responsibility is assumed by Analog Devices for its use, nor for any infringements of patents or other rights of third parties that may result from its use. Specifications subject to change without notice. No license is granted by implication or otherwise under any patent or patent rights of Analog Devices. Trademarks and registered trademarks are the property of their respective owners.

One Technology Way, P.O. Box 9106, Norwood, MA 02062-9106, U.S.A.
Tel: 781.329.4700 ©2009–2018 Analog Devices, Inc. All rights reserved.
Technical Support www.analog.com

TABLE OF CONTENTS

Features ... 1
Applications ... 1
General Description ... 1
Functional Block Diagram ... 1
Revision History ... 2
Specifications ... 3
Timing Specifications ... 5
Absolute Maximum Ratings ... 6
ESD Caution ... 6
Pin Configuration and Function Descriptions ... 7
Typical Performance Characteristics ... 8
Theory of Operation ... 9
Sensing Element ... 9
Data Sampling and Processing ... 9
User Interface ... 9
Basic Operation ... 10
SPI Write Commands ... 11
SPI Read Commands ... 11
Memory Map ... 12
Processing Sensor Data ... 13
Operational Controls ... 13
Input/Output Functions ... 15
Diagnostics ... 16
Product Identification ... 17
Applications Information ... 18
Assembly ... 18
Bias Optimization ... 18
Interface Printed Circuit Board ... 18
Outline Dimensions ... 20
Ordering Guide ... 20

REVISION HISTORY

9/2018—Rev. E to Rev. F

Changes to General Description Section ... 1
Changes to Assembly Section, Interface Printed Circuit Board Section, and Figure 19 ... 18
Changes to Ordering Guide ... 20

1/2014—Rev. D to Rev. E

Change to Table 3 ... 6
Change to Bias Optimization Section ... 18

10/2011—Rev. C to Rev. D

Change to Step 9, Bias Optimization Section ... 18

5/2011—Rev. B to Rev. C

Changes to Bias Optimization Section ... 18

12/2010—Rev. A to Rev. B

Changes to Equation in Internal Sample Rate Section ... 13
Changes to Figure 15 ... 14
Changes to Bias Optimization Section ... 18

10/2009—Rev. 0 to Rev. A

Added ADIS16260 ... Universal
Changes to Features List and General Description Section ... 1
Changes to Table 1 ... 4
Change to Absolute Maximum Ratings Table Section ... 6
Changes to Interface Printed Circuit Board Section ... 18
Changes to Ordering Guide ... 20

9/2009—Revision 0: Initial Version

SPECIFICATIONS

T_A = −40°C to +105°C, V_{CC} = 5.0 V, angular rate = 0°/sec, ±1 *g*, ±320°/sec range setting, unless otherwise noted.

Table 1.

Parameter	Test Conditions/Comments	Min	Typ	Max	Unit
SENSITIVITY[1]	Clockwise rotation is positive output				
	25°C, dynamic range = ±320°/sec[2]		0.07326		°/sec/LSB
	25°C, dynamic range = ±160°/sec		0.03663		°/sec/LSB
	25°C, dynamic range = ±80°/sec		0.01832		°/sec/LSB
Initial Tolerance	25°C, dynamic range = ±320°/sec		±0.2	±1	%
Temperature Coefficient	ADIS16260		125		ppm/°C
	ADIS16265		25		ppm/°C
Nonlinearity	Best fit straight line		0.1		% of FS
BIAS					
In-Run Bias Stability	25°C, 1σ		0.007		°/sec
Turn-On-to-Turn-On Bias Stability	25°C, 1σ		0.025		°/sec
Angular Random Walk	25°C, 1σ		2		°/√hour
Temperature Coefficient	ADIS16260		0.03		°/sec/°C
	ADIS16265		0.005		°/sec/°C
Linear Acceleration Effect	Any axis		0.2		°/sec/*g*
Voltage Sensitivity	V_{CC} = 4.75 V to 5.25 V		0.5		°/sec/V
NOISE PERFORMANCE					
Output Noise	25°C, ±320°/sec range, no filtering, 50 Hz, 256 SPS		0.4		°/sec rms
	25°C, ±320°/sec range, no filtering, 330 Hz, 2048 SPS		0.9		°/sec rms
	25°C, ±160°/sec range, 4-tap filter setting, 50 Hz		0.2		°/sec rms
	25°C, ±80°/sec range, 16-tap filter setting, 50 Hz		0.1		°/sec rms
Rate Noise Density	25°C, f = 25 Hz, ±320°/sec range, no filtering		0.044		°/sec/√Hz rms
FREQUENCY RESPONSE					
3 dB Bandwidth	SENS_AVG[7] = 0		50		Hz
	SENS_AVG[7] = 1		330		Hz
Sensor Resonant Frequency			14		kHz
SELF-TEST STATE					
Change for Positive Stimulus	320°/sec dynamic range setting	+575	+1100	+1500	LSB
Change for Negative Stimulus	320°/sec dynamic range setting	−575	−1100	−1500	LSB
Internal Self-Test Cycle Time			25		ms
ADC INPUT					
Resolution			12		Bits
Integral Nonlinearity			±2		LSB
Differential Nonlinearity			±1		LSB
Offset Error			±4		LSB
Gain Error			±2		LSB
Input Range		0		2.5	V
Input Capacitance	During acquisition		20		pF
ON-CHIP VOLTAGE REFERENCE			2.5		V
Accuracy	25°C	−10		+10	mV
Temperature Coefficient			±40		ppm/°C
Output Impedance			70		Ω

Parameter	Test Conditions/Comments	Min	Typ	Max	Unit
DAC OUTPUT	5 kΩ/100 pF to GND				
Resolution			12		Bits
Relative Accuracy	For Code 101 to Code 4095		4		LSB
Differential Nonlinearity			1		LSB
Offset Error			±5		mV
Gain Error			±0.5		%
Output Range		0		2.5	V
Output Impedance			2		Ω
Output Settling Time			10		µs
LOGIC INPUTS	Internal 3.3 V interface				
Input High Voltage, V_{INH}		2.0			V
Input Low Voltage, V_{INL}				0.8	V
Logic 1 Input Current, I_{INH}	V_{IH} = 3.3 V		±0.2	±10	µA
Logic 0 Input Current, I_{INL}	V_{IL} = 0 V				
All Except $\overline{RST}$			−40	−60	µA
$\overline{RST}$	The $\overline{RST}$ pin has an internal pull-up.		−1		mA
Input Capacitance, C_{IN}			10		pF
DIGITAL OUTPUTS	Internal 3.3 V interface				
Output High Voltage, V_{OH}	I_{SOURCE} = 1.6 mA	2.4			V
Output Low Voltage, V_{OL}	I_{SINK} = 1.6 mA			0.4	V
SLEEP TIMER					
Timeout Period[3]		0.5		128	sec
START-UP TIME					
Initial Start-Up Time			165		ms
Sleep Mode Recovery			2.5		ms
Flash Update Time			50		ms
Flash Test Process Time	Normal mode, SMPL_PRD[7:0] ≤ 0x07		18		ms
	Low power mode, SMPL_PRD[7:0] ≥ 0x08		70		ms
FLASH MEMORY					
Endurance[4]		20,000			Cycles
Data Retention[5]	T_J = 55°C	10			Years
CONVERSION RATE					
Minimum Conversion Time	SMPL_PRD[7:0] = 0x00		0.488		ms
Maximum Conversion Time	SMPL_PRD[7:0] = 0xFF		7.75		sec
Maximum Throughput Rate	SMPL_PRD[7:0] = 0x00		2048		SPS
Minimum Throughput Rate	SMPL_PRD[7:0] = 0xFF		0.129		SPS
POWER SUPPLY					
Operating Voltage Range, V_{CC}		4.75	5.0	5.25	V
Power Supply Current	Low power mode, SMPL_PRD[7:0] ≥ 0x08		17		mA
	Normal mode, SMPL_PRD[7:0] ≤ 0x07		41		mA
	Sleep mode		350		µA

[1] ADIS16260/ADIS16265 characterization data represents ±4σ to fall within the ±1% limit.
[2] The maximum guaranteed measurement range is ±320°/sec. The sensor outputs will measure beyond this range, but performance is not assured.
[3] Guaranteed by design.
[4] Endurance is qualified as per JEDEC Standard 22, Method A117, and measured at −40°C, +25°C, +85°C, and +125°C.
[5] Retention lifetime equivalent at a junction temperature (T_J) of 55°C, as per JEDEC Standard 22, Method A117. Retention lifetime decreases with junction temperature.

TIMING SPECIFICATIONS

T_A = −40°C to +85°C, V_{CC} = 5.0 V, unless otherwise noted.

Table 2.

Parameter	Description	Normal Mode (SMPL_PRD[7:0] ≤ 0x07, f_S ≥ 64 Hz) Min[1]	Typ	Max[1]	Low Power Mode (SMPL_PRD[7:0] ≥ 0x08, f_S ≤ 56.9 Hz) Min[1]	Typ	Max[1]	Unit
f_{SCLK}	Serial clock	0.01		2.5	0.01		1.0	MHz
$t_{DATARATE}$	Data rate period	32			42			µs
t_{STALL}	Stall period between data	9			12			µs
$t_{\overline{CS}}$	Chip select to clock edge	48.8			48.8			ns
t_{DAV}	Data output valid after SCLK falling edge[2]			100			100	ns
t_{DSU}	Data input setup time before SCLK rising edge	24.4			24.4			ns
t_{DHD}	Data input hold time after SCLK rising edge	48.8			48.8			ns
t_{DF}	Data output fall time		5	12.5		5	12.5	ns
t_{DR}	Data output rise time		5	12.5		5	12.5	ns
t_{SFS}	$\overline{CS}$ high after SCLK edge[3]	5			5			ns

[1] Guaranteed by design; not production tested.
[2] The MSB presents an exception to this parameter. The MSB clocks out on the falling edge of $\overline{CS}$. The rest of the DOUT bits are clocked after the falling edge of SCLK and are governed by this specification.
[3] This parameter may need to be expanded to allow for proper capture of the LSB. After $\overline{CS}$ goes high, the DOUT line goes into a high impedance state.

Timing Diagrams

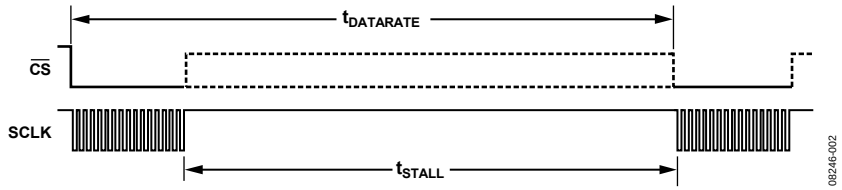

Figure 2. SPI Chip Select Timing

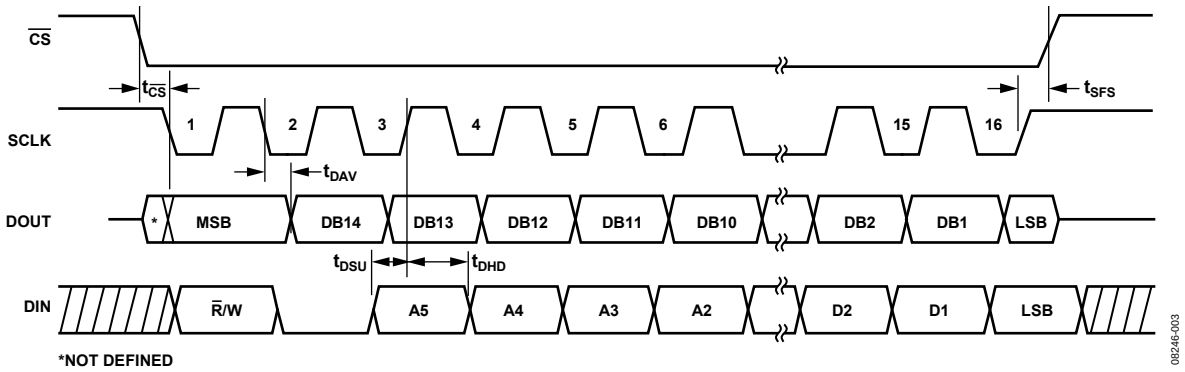

Figure 3. SPI Timing (Using SPI Settings Typically Identified as CPOL = 1, CPHA = 1)

ABSOLUTE MAXIMUM RATINGS

Table 3.

Parameter	Rating
Acceleration	
Any Axis, Unpowered, 0.5 ms	2000 *g*
Any Axis, Powered, 0.5 ms	2000 *g*
VCC to GND	−0.3 V to +6.0 V
Digital Input/Output Voltage to GND	−0.3 V to +5.3 V
Analog Inputs to GND	−0.3 V to +3.5 V
Operating Temperature Range[1]	−40°C to +125°C
Storage Temperature Range[1]	−65°C to +150°C

[1] Extended exposure to temperatures outside the temperature range of −40°C to +85°C can adversely affect the accuracy of the factory calibration. For best accuracy, store the part within the temperature range of −40°C to +85°C.

Stresses at or above those listed under Absolute Maximum Ratings may cause permanent damage to the product. This is a stress rating only; functional operation of the product at these or any other conditions above those indicated in the operational section of this specification is not implied. Operation beyond the maximum operating conditions for extended periods may affect product reliability.

ESD CAUTION

ESD (electrostatic discharge) sensitive device. Charged devices and circuit boards can discharge without detection. Although this product features patented or proprietary protection circuitry, damage may occur on devices subjected to high energy ESD. Therefore, proper ESD precautions should be taken to avoid performance degradation or loss of functionality.

PIN CONFIGURATION AND FUNCTION DESCRIPTIONS

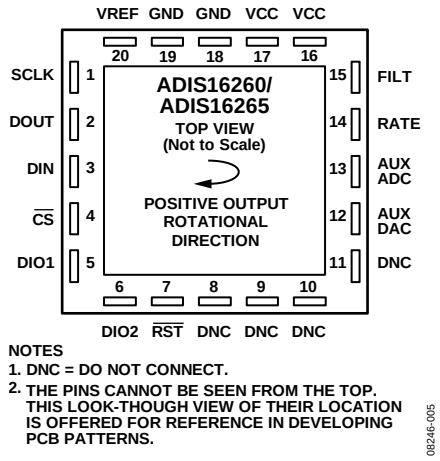

Figure 4. Pin Configuration

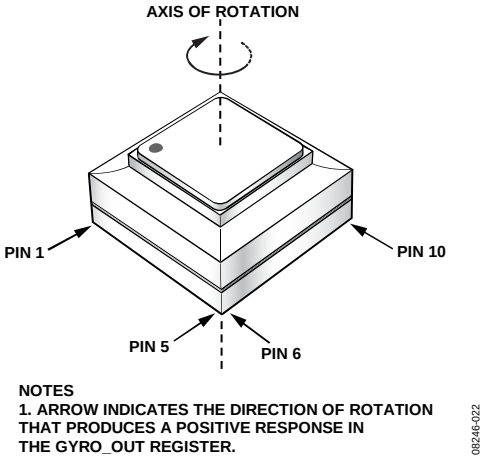

Figure 5. Axial Orientation

Table 4. Pin Function Descriptions

Pin No.	Mnemonic	Type[1]	Description
1	SCLK	I	SPI Serial Clock.
2	DOUT	O	SPI Data Output. Clocks output on SCLK falling edge.
3	DIN	I	SPI Data Input. Clocks input on SCLK rising edge.
4	$\overline{CS}$	I	SPI Chip Select. Active low.
5, 6	DIO1, DIO2	I/O	Configurable Digital Input/Output.
7	$\overline{RST}$	I	Reset. Active low.
8, 9, 10, 11	DNC		Do Not Connect.
12	AUX DAC	O	Auxiliary DAC Output.
13	AUX ADC	I	Auxiliary ADC Input.
14	RATE	O	Rate Output. For bandwidth reduction only; output is not specified.
15	FILT	I	Filter Terminal.
16, 17	VCC	S	5.0 V Power Supply.
18, 19	GND	S	Ground.
20	VREF	O	Precision Reference Output.

[1] I = input, I/O = input/output, O = output, S = supply.

TYPICAL PERFORMANCE CHARACTERISTICS

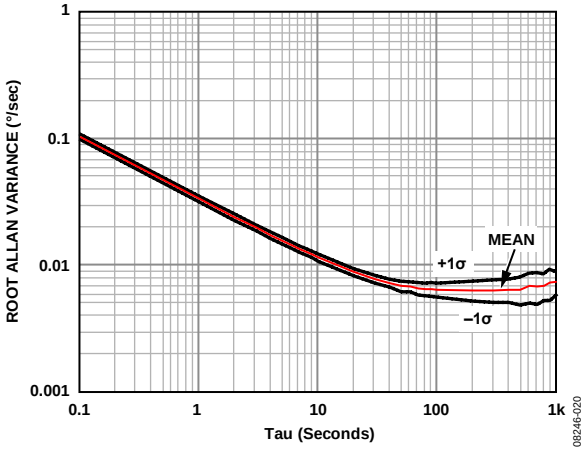

Figure 6. Gyroscope Allan Variance

THEORY OF OPERATION

The ADIS16260 and the ADIS16265 integrate a MEMS gyroscope with data sampling, signal processing, and calibration functions, along with a simple user interface. This sensing system collects data autonomously and makes it available to any processor system that supports a 4-wire serial peripheral interface (SPI).

SENSING ELEMENT

The sensing element operates on the principle of a resonator gyro. Two polysilicon sensing structures each contain a dither frame that is electrostatically driven to resonance, producing the necessary velocity element to produce a Coriolis force during angular rate. At two of the outer extremes of each frame, orthogonal to the dither motion, movable fingers are placed between fixed pickoff fingers to form a capacitive pickoff structure that senses Coriolis motion. The resulting signal is fed into a series of gain and demodulation stages that produce the electrical rate signal output. The differential structure minimizes the response to linear acceleration (gravity, vibration, and so on) and to EMI.

DATA SAMPLING AND PROCESSING

The ADIS16260 and the ADIS16265 run autonomously, based on the configuration in the user control registers. The analog gyroscope signal feeds into an analog-to-digital converter (ADC) stage, which passes digitized data into the controller for data processing and register loading. Data processing in the embedded controller includes correction formulas, filtering, and checking for preset alarm conditions. The correction formulas are unique for each individual ADIS16260/ADIS16265 and come from the factory characterization of each device over a temperature range of −40°C to +85°C.

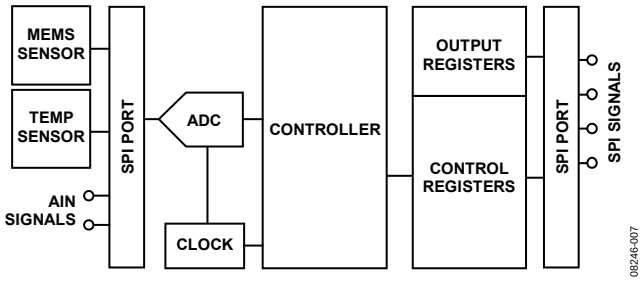

Figure 7. Simplified Sensor Signal Processing Diagram

USER INTERFACE

SPI Interface

Data collection and configuration commands both use the SPI, which consists of four wires. The chip select ($\overline{CS}$) signal activates the SPI interface, and the serial clock (SCLK) signal synchronizes the serial data lines. The serial input data clocks into DIN on the SCLK rising edge, and the serial output data clocks out of DOUT on the SCLK falling edge. Many digital processor platforms support this interface with dedicated serial ports and simple instruction sets.

User Registers

The user registers provide addressing for all input/output operations on the SPI interface. Each 16-bit register has its own unique bit assignment and has two 7-bit addresses: one for its upper byte and one for its lower byte. Table 7 provides a memory map of the user registers, along with the function of each register.

The control registers use a dual memory structure. The SRAM controls operation while the part is on and facilitates all user configuration inputs. The flash memory provides nonvolatile storage for control registers that have flash backup (see Table 7). Storing configuration data in the flash memory requires a separate command (GLOB_CMD[3] = 1, DIN = 0xBE08). When the device powers on or resets, the flash memory contents are loaded into the SRAM, and the device then starts producing data according to the configuration in the control registers.

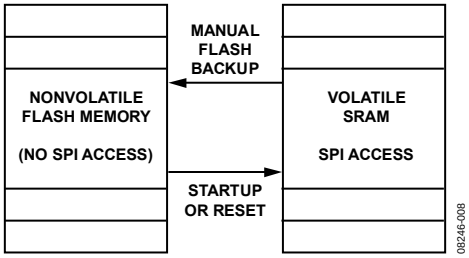

Figure 8. SRAM and Flash Memory Diagram

BASIC OPERATION

The ADIS16260 and the ADIS16265 require only power, ground, and the four SPI signals to produce data and make it available to an embedded processor. Figure 9 provides a schematic for connecting the ADIS16260 and the ADIS16265 to a SPI-compatible processor and includes one of the configurable digital I/O lines. The MSC_CTRL[2:0] bits are used to configure this line as a data ready indicator (see the Data Ready I/O Indicator section).

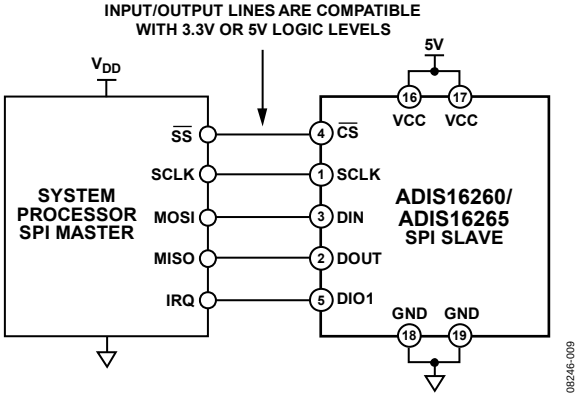

Figure 9. Electrical Connection Diagram

Table 5. Generic Master Processor Pin Names and Functions

Pin Name	Function
$\overline{SS}$	Slave select
IRQ	Interrupt request input
MOSI	Master output, slave input
MISO	Master input, slave output
SCLK	Serial clock

The ADIS16260 and the ADIS16265 SPI interface supports full-duplex serial communication (simultaneous transmit and receive) and uses the bit sequence shown in Figure 11. Processor platforms typically support SPI communication with general-purpose serial ports that require some configuration in their control registers. Table 6 provides a list of the most common settings that require attention to initialize the serial port of a processor for communication with the ADIS16260 and the ADIS16265.

Table 6. Generic Master Processor SPI Settings

Processor Setting	Description
Master	The ADIS16260 and the ADIS16265 operate as slaves
SCLK Rate ≤ 2.5 MHz	Bit rate setting (SMPL_PRD[7:0] ≤ 0x07)
SPI Mode 3	Clock polarity, phase (CPOL = 1, CPHA = 1)
MSB First Mode	Bit sequence
16-Bit Mode	Shift register/data length

User registers govern all data collection and configuration. Table 7 provides a memory map that includes all user registers, along with references to the bit assignment tables that follow the generic bit assignments in Figure 10.

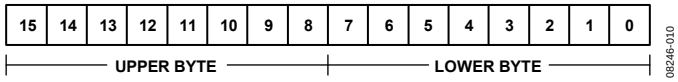

Figure 10. Generic Register Bit Definitions

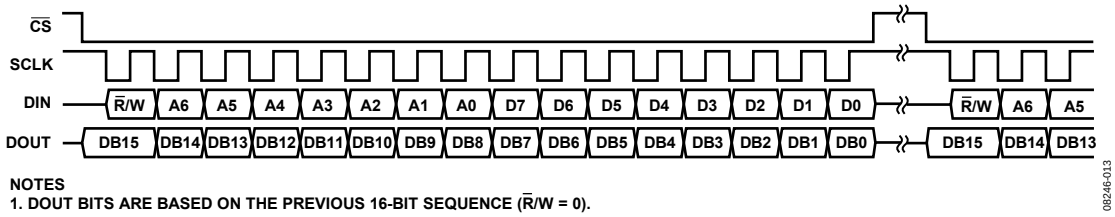

Figure 11. SPI Communication Bit Sequence

SPI WRITE COMMANDS

Master processors write to the control registers, one byte at a time, using the bit sequence shown in Figure 11. Some configurations require writing both bytes to a register, which takes two separate 16-bit sequences, whereas others require only one byte. The programmable registers in Table 7 provide controls for optimizing sensor operation and for starting various automated functions. For example, to start an automatic bias null sequence, set GLOB_CMD[0] = 1 by writing 0xBE01 to the SPI transmit register of the master processor, which feeds the DIN line. The process starts immediately after the last bit clocks into DIN (16th SCLK rising edge).

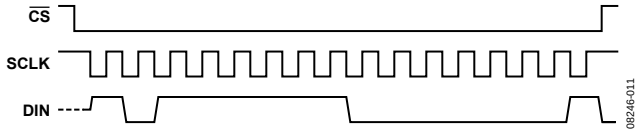

Figure 12. SPI Sequence for Autonull (DIN = 0xBE01)

SPI READ COMMANDS

Reading data through the SPI requires two consecutive 16-bit sequences, separated by an appropriate stall time (see Figure 2). The first sequence transmits the read command and address on DIN, and the second receives the resulting data from DOUT. The 7-bit register address can represent either the upper or lower byte address for the target register. For example, when reading the GYRO_OUT register, the address can be either 0x04 or 0x05. Figure 13 provides a full-duplex mode example of reading the GYRO_OUT register. In addition, the second SPI segment sets the device up to read TEMP_OUT on the following SPI segment (not shown in Figure 13).

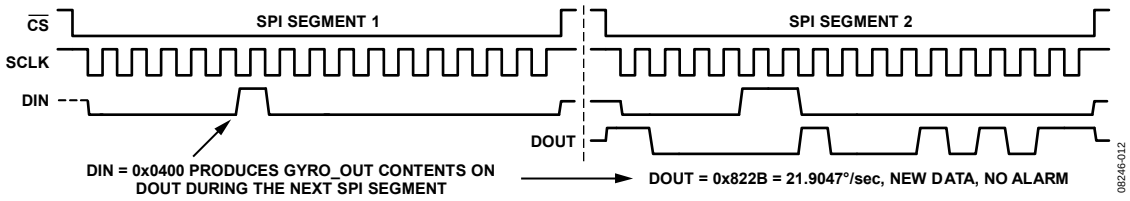

Figure 13. Example SPI Read Sequence (±320°/sec Range Setting)

MEMORY MAP

All unused memory locations are reserved for future use.

Table 7. User Register Memory Map

Name	Access	Flash Backup	Address[1]	Default	Register Description	Bit Assignments
FLASH_CNT	Read only	Yes	0x00	N/A	Flash memory write count	
SUPPLY_OUT	Read only	No	0x02	N/A	Output, power supply measurement	See Table 9
GYRO_OUT	Read only	No	0x04	N/A	Output, rate of rotation measurement	See Table 10
			0x06 to 0x09	N/A	Reserved	
AUX_ADC	Read only	No	0x0A	N/A	Output, analog input channel measurement	See Table 13
TEMP_OUT	Read only	No	0x0C	N/A	Output, internal temperature measurement	See Table 12
ANGL_OUT	Read/write	No	0x0E	N/A	Output, angle displacement	See Table 11
			0x10 to 0x13	N/A	Reserved	
GYRO_OFF	Read/write	Yes	0x14	0x0000	Calibration, offset/bias adjustment	See Table 16
GYRO_SCALE	Read/write	Yes	0x16	0x0800	Calibration, scale adjustment	See Table 17
			0x18 to 0x1F	N/A	Reserved	
ALM_MAG1	Read/write	Yes	0x20	0x0000	Alarm 1 magnitude/polarity setting	See Table 26
ALM_MAG2	Read/write	Yes	0x22	0x0000	Alarm 2 magnitude/polarity setting	See Table 26
ALM_SMPL1	Read/write	Yes	0x24	0x0000	Alarm 1 dynamic rate of change setting	See Table 27
ALM_SMPL2	Read/write	Yes	0x26	0x0000	Alarm 2 dynamic rate of change setting	See Table 27
ALM_CTRL	Read/write	Yes	0x28	0x0000	Alarm control register	See Table 28
			0x2A to 0x2F	N/A	Reserved	
AUX_DAC	Read/write	No	0x30	0x0000	Control, DAC output voltage setting	See Table 22
GPIO_CTRL	Read/write	No	0x32	N/A	Control, digital I/O line	See Table 20
MSC_CTRL	Read/write	Yes	0x34	0x0000	Control, data ready, self-test settings	See Table 21
SMPL_PRD	Read/write	Yes	0x36	0x0001	Control, internal sample rate	See Table 14
SENS_AVG	Read/write	Yes	0x38	0x0402	Control, dynamic range, filtering	See Table 15
SLP_CNT	Read/write	Yes	0x3A	0x0000	Control, sleep mode initiation	See Table 19
DIAG_STAT	Read only	No	0x3C	N/A	Diagnostic, error flags	See Table 25
GLOB_CMD	Write only	No	0x3E	N/A	Control, global commands	See Table 18
			0x40 to 0x51	N/A	Reserved	
LOT_ID1	Read only	Yes	0x52	N/A	Lot Identification Code 1	See Table 31
LOT_ID2	Read only	Yes	0x54	N/A	Lot Identification Code 2	See Table 31
PROD_ID	Read only	Yes	0x56	0x3F89/0x3F84	Product identifier; convert to decimal = 16,265/16,260	See Table 31
SERIAL_NUM	Read only	Yes	0x58	N/A	Serial number	See Table 31

[1] Each register contains two bytes. The address of the lower byte is displayed. The address of the upper byte is equal to the address of the lower byte plus 1.

PROCESSING SENSOR DATA

Table 8 provides a summary of the output data registers, which use the bit pattern shown in Figure 14. The ND bit is equal to 1 when the register contains unread data. The EA bit is high when any error/alarm flag in the DIAG_STAT register is equal to 1.

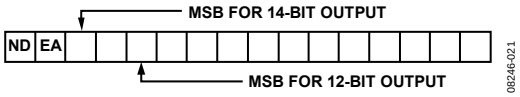

Figure 14. Output Register Bit Assignments

Table 8. Output Data Register Formats

Register	Bits	Scale	Reference
SUPPLY_OUT	12	1.8315 mV	See Table 9
GYRO_OUT[1]	14	0.07326°/sec	See Table 10
ANGL_OUT	14	0.03663°	See Table 11
TEMP_OUT[2]	12	0.1453°C	See Table 12
AUX_ADC	12	610.5 µV	See Table 13

[1] Assumes that the scaling is set to ±320°/sec. This factor scales with the range.
[2] 0x0000 = 25°C (±5°C).

Table 9. SUPPLY_OUT Data Format Examples

Supply Voltage (V)	Decimal	Hex	Binary Output
5.25	2867 LSB	0xB33	1011 0011 0011
5.0 + 0.00183	2731 LSB	0xAAB	1010 1010 1011
5.0	2730 LSB	0xAAA	1010 1010 1010
5.0 – 0.00183	2729 LSB	0xAA9	1010 1010 1001
4.75	2594 LSB	0xA22	1010 0010 0010

Table 10. GYRO_OUT Data Format Examples

Rotation Rate (°/sec)[1]	Decimal	Hex	Binary Output
+320	+4368 LSB	0x1110	01 0001 0001 0000
+0.07326	+1 LSB	0x0001	00 0000 0000 0001
0	0 LSB	0x0000	00 0000 0000 0000
–0.07326	–1 LSB	0x3FFF	11 1111 1111 1111
–320	–4368 LSB	0x2EF0	10 1110 1111 0000

[1] For the ±320°/sec setting, rate values scale with the range setting.

Table 11. ANGL_OUT Data Format Examples

Angle[1]	Decimal	Hex	Binary Output
359.9630°	9827 LSB	0x2663	10 0110 0110 0011
359.9264°	9826 LSB	0x2662	10 0110 0110 0010
0.36630°	10 LSB	0x000A	00 0000 0000 1010
0.03663°	1 LSB	0x0001	00 0000 0000 0001
0°	0 LSB	0x0000	00 0000 0000 0000

[1] 359.963° + 1 LSB is equal to 0x0000.

Table 12. TEMP_OUT Data Format Examples

Temperature	Decimal	Hex	Binary Output
+105°C	+551 LSB	0x227	0010 0010 0111
+25.1453°C	+1 LSB	0x001	0000 0000 0001
+25°C	0 LSB	0x000	0000 0000 0000
+24.8547°C	–1 LSB	0xFFF	1111 1111 1111
–40°C	–447 LSB	0xE41	1110 0100 0001

Table 13. AUX_ADC Data Format Examples

Input (mV)	Decimal	Hex	Binary Output
2500	4095 LSB	0xFFF	1111 1111 1111
1200	1966 LSB	0x7AE	0111 1010 1110
0.6105	1 LSB	0x001	0000 0000 0001
0	0 LSB	0x000	0000 0000 0000

OPERATIONAL CONTROLS

Internal Sample Rate

The SMPL_PRD register controls the internal sample rate using the bit assignments in Table 14. When SMPL_PRD[7:0] = 0x00, the internal sample rate is 2048 SPS. When SMPL_PRD[7:0] ≥ 0x01, use the bit definitions in Table 14 and the following equation to calculate the sample rate.

$$f_S = \frac{1}{t_S} = \frac{1}{t_B \times (N_S + 1)}$$

Table 14. SMPL_PRD Bit Descriptions

Bits	Description (Default = 0x0001)
[15:8]	Not used
7	Time base (t_B): 0 = 1.953 ms, 1 = 60.54 ms
[6:0]	Increment setting (N_S)

Sensor Bandwidth

The gyroscope signal chain has several filter stages that shape its frequency response. Figure 15 provides a block diagram of each filter stage and Table 15 lists the SENS_AVG register controls for bandwidth.

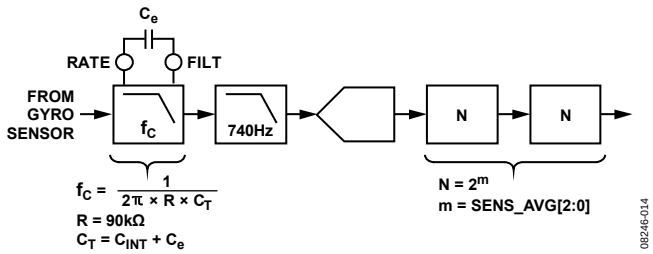

Figure 15. Signal Processing Diagram

Table 15. SENS_AVG Bit Descriptions

Bits	Description (Default = 0x0402)
[15:11]	Not used.
[10:8]	Measurement range (sensitivity) selection. 100 = ±320°/sec (default condition). 010 = ±160°/sec, filter taps ≥ 4 (Bits[2:0] ≥ 0x02). 001 = ±80°/sec, filter taps ≥ 16 (Bits[2:0] ≥ 0x04).
7	Primary pole setting (k). 1: C_{INT} = 0.0047 µF (bandwidth = 330 Hz). 0: C_{INT} = 0.0377 µF (bandwidth = 50 Hz).
[6:3]	Not used.
[2:0]	Number of taps in each stage; value of m in $N = 2^m$.

Digital Filtering

A programmable low-pass filter provides additional opportunity for noise reduction on the inertial sensor outputs. This filter contains two cascaded averaging filters that provide a Bartlett window, FIR filter response (see Figure 16). For example, set SENS_AVG[2:0] = 100 (DIN = 0xB804) to set each stage to 16 taps. When used with the default sample rate of 256 SPS, this reduces the bandwidth of the digital filter to approximately 5.2 Hz.

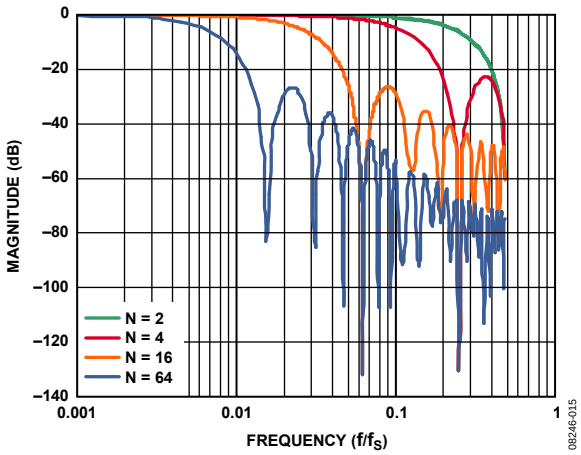

Figure 16. Digital Filter Frequency, Bartlett Window FIR Filter (Phase = N Samples)

Dynamic Range

The SENS_AVG[10:8] bits provide three dynamic range settings for this gyroscope. The lower dynamic range settings (±80°/sec and ±160°/sec) limit the minimum filter tap sizes to maintain resolution. For example, set SENS_AVG[10:8] = 010 (DIN = 0xB902) for a measurement range of ±160°/sec. Because this setting can influence the filter settings, program SENS_AVG[10:8] and then SENS_AVG[2:0] if more filtering is required.

Calibration

The GYRO_OFF and GYRO_SCALE registers provide user controls for making in-system adjustments to offset and scale factor.

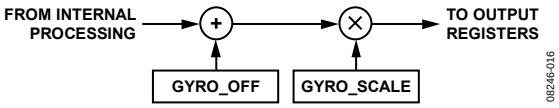

Figure 17. User Calibration Registers

Table 16. GYRO_OFF Bit Descriptions

Bits	Description (Default = 0x0000)
[15:12]	Not used.
[11:0]	Offset adjustment factor, twos complement format, 0.018315°/sec per LSB. Examples follow: 0x000: Add 0°/sec to gyroscope data. 0x001: Add 0.018315°/sec to gyroscope data. 0x0AA: Add 3.11355°/sec to gyroscope data. 0xF0F: Subtract 4.41392°/sec from gyroscope data. 0xFFF: Subtract 0.018315°/sec from gyroscope data.

Table 17. GYRO_SCALE Bit Descriptions

Bits	Description (Default = 0x0800)
[15:12]	Not used.
[11:0]	Scale adjustment factor, offset binary format, 0.00048828/LSB. Examples follow: 0x000: Multiply output by 0. 0x7F0: Multiply gyroscope data by 0.99218. 0x800: Multiply output by 1. 0x8A0: Multiply output by 1.077812. 0xFFF: Multiply output by 1.9995.

Global Commands

The GLOB_CMD register provides trigger bits for several functions. Setting the assigned bit to 1 starts each operation, which returns the bit to 0 after completion. For example, set GLOB_CMD[7] = 1 (DIN = 0xBE80) to execute a software reset, which stops the sensor operation and runs the device through its start-up sequence. This sequence includes loading the control registers with the contents of their respective flash memory locations prior to producing new data.

Table 18. GLOB_CMD Bit Descriptions

Bits	Description
[15:8]	Not used.
7	Software reset command.
[6:4]	Not used.
3	Flash update command.
2	Auxiliary DAC data latch.
1	Factory calibration restore command.
0	Autonull command.

Power Management

Setting SMPL_PRD[7:0] ≥ 0x08 also sets the sensor to low power mode. For systems that require lower power dissipation, in-system characterization helps users to quantify the associated performance trade-offs. In addition to sensor performance, low power mode affects SPI data rates (see Table 2). Use SLP_CNT[7:0] to put the device into sleep mode for a specified period. For example, SLP_CNT[7:0] = 0x64 (DIN = 0xBA64) puts the ADIS16260 and ADIS16265 to sleep for 50 seconds.

Table 19. SLP_CNT Bit Descriptions

Bits	Description (Default = 0x0000)
[15:8]	Not used.
[7:0]	Programmable sleep time bits, 0.5 sec/LSB.

INPUT/OUTPUT FUNCTIONS

General-Purpose I/O

DIO1 and DIO2 are configurable, general-purpose I/O lines that serve multiple purposes according to the following control register priority: MSC_CTRL, ALM_CTRL, and GPIO_CTRL. For example, set GPIO_CTRL = 0x0202 (DIN = 0xB302, and then 0xB202) to configure DIO1 as an input and DIO2 as an output set high.

Table 20. GPIO_CTRL Bit Descriptions

Bits	Description
[15:10]	Not used.
9	General-Purpose I/O Line 2 (DIO2) data level.
8	General-Purpose I/O Line 1 (DIO1) data level.
[7:2]	Not used.
1	General-Purpose I/O Line 2 (DIO2) direction control. 1 = output, 0 = input.
0	General-Purpose I/O Line 1 (DIO1) direction control. 1 = output, 0 = input.

Data Ready I/O Indicator

The MSC_CTRL[2:0] bits configure one of the digital I/O lines as a data ready signal for driving an interrupt. For example, set MSC_CTRL[2:0] = 100 (DIN = 0xB404) to configure DIO1 as a negative-pulse data ready signal. The pulse width is between 100 µs and 200 µs over all conditions.

Table 21. MSC_CTRL Bit Descriptions

Bits	Description (Default = 0x0000)
[15:12]	Not used.
11	Memory test (cleared upon completion). 1 = enabled, 0 = disabled.
10	Internal self-test enable (cleared upon completion). 1 = enabled, 0 = disabled.
9	Manual self-test, negative stimulus. 1 = enabled, 0 = disabled.
8	Manual self-test, positive stimulus. 1 = enabled, 0 = disabled.
[7:3]	Not used.
2	Data ready enable. 1 = enabled, 0 = disabled.
1	Data ready polarity. 1 = active high, 0 = active low.
0	Data ready line select. 1 = DIO2, 0 = DIO1.

Auxiliary DAC

The 12-bit AUX_DAC line can drive its output to within 5 mV of the ground reference when it is not sinking current. As the output approaches 0 V, the linearity begins to degrade (~100 LSB starting point). As the sink current increases, the nonlinear range increases. The DAC latch command moves the values of the AUX_DAC register into the DAC input register, enabling both bytes to take effect at the same time.

Table 22. AUX_DAC Bit Descriptions

Bits	Description (Default = 0x0000)
[15:12]	Not used.
[11:0]	Data bits, scale factor = 0.6105 mV/code. Offset binary format, 0 V = 0 codes.

Table 23. Setting AUX_DAC = 2 V

DIN	Description
0xB0CC	AUX_DAC[7:0] = 0xCC (204 LSB).
0xB10C	AUX_DAC[15:8] = 0x0C (3072 LSB).
0xBE04	GLOB_CMD[2] = 1. Move values into the DAC input register, resulting in a 2 V output level.

DIAGNOSTICS

Self-Test

The self-test function allows the user to verify the mechanical integrity of each MEMS sensor. It applies an electrostatic force to each sensor element, which results in mechanical displacement that simulates a response to actual motion. Table 1 lists the expected response for each sensor, which provides pass/fail criteria.

Set MSC_CTRL[10] = 1 (DIN = 0xB504) to run the internal self-test routine, which exercises the inertial sensor, measures the response, makes a pass/fail decision, reports the decision to error flags in the DIAG_STAT register, and then restores normal operation. MSC_CTRL[10] resets itself to 0 after completing the routine. The MSC_CTRL[9:8] bits provide manual control of the self-test function for investigation of potential failures. Table 24 outlines an example test flow for using this option to verify the gyroscope function.

Table 24. Manual Self-Test Example Sequence

DIN	Description
0xB601	SMPL_PRD[7:0] = 0x01, sample rate = 256 SPS.
0xB904	SENS_AVG[15:8] = 0x04, gyroscope range = ±320°/sec.
0xB802	SENS_AVG[7:0] = 0x02, four-tap averaging filter.
	Delay = 50 ms.
0x0400	Read GYRO_OUT.
0xB502	MSC_CTRL[9:8] = 10, gyroscope negative self-test.
	Delay = 50 ms.
0x0400	Read GYRO_OUT.
	Determine whether the bias in the gyroscope output changed according to the self-test response specified in Table 1.
0xB501	MSC_CTRL[9:8] = 01, gyroscope/accelerometer positive self-test.
	Delay = 50 ms.
0x0400	Read GYRO_OUT.
	Determine whether the bias in the gyroscope output changed according to the self-test response specified in Table 1.
0xB500	MSC_CTRL[15:8] = 0x00.

Zero motion provides results that are more reliable. The settings in Table 24 are flexible and allow for optimization around speed and noise influence. For example, using fewer filtering taps decreases delay times but increases the potential for noise influence.

Memory Test

Setting MSC_CTRL[11] = 1 (DIN = 0xB508) performs a checksum comparison between the flash memory and SRAM to help verify memory integrity. The pass/fail result is loaded into the DIAG_STAT[6] register.

Status

The error flags provide indicator functions for common system level issues. All of the flags are cleared (set to 0) after each DIAG_STAT register read cycle. If an error condition remains, the error flag returns to 1 during the next sample cycle. DIAG_STAT[1:0] does not require a read of this register to return to 0. If the power supply voltage goes back into range, these two flags are cleared automatically.

Table 25. DIAG_STAT Bit Descriptions

Bits	Description
[15:10]	Not used.
9	Alarm 2 status (1 = active, 0 = inactive).
8	Alarm 1 status (1 = active, 0 = inactive).
7	Not used.
6	Flash test, checksum flag (1 = fail, 0 = pass).
5	Self-test diagnostic error flag (1 = fail, 0 = pass).
4	Sensor overrange (1 = fail, 0 = pass).
3	SPI communication failure (1 = fail, 0 = pass).
2	Flash update failure (1 = fail, 0 = pass).
1	Power supply > 5.25 V. 1 = power supply > 5.25 V, 0 = power supply ≤ 5.25 V.
0	Power supply < 4.75 V. 1 = power supply < 4.75 V, 0 = power supply ≥ 4.75 V.

Alarm Registers

The alarm function provides monitoring for two independent conditions. The ALM_CTRL register provides control inputs for data source, data filtering (prior to comparison), static comparison, dynamic rate-of-change comparison, and output indicator configurations. The ALM_MAGx registers establish the trigger threshold and polarity configurations. Table 29 gives an example of how to configure a static alarm. The ALM_SMPLx registers provide the numbers of samples to use in the dynamic rate-of-change configuration. The period equals the number in the ALM_SMPLx register multiplied by the sample period time, which is established by the SMPL_PRD register. See Table 30 for an example of how to configure the sensor for this type of function.

Table 26. ALM_MAG1, ALM_MAG2 Bit Descriptions

Bits	Description (Default = 0x0000)
15	Comparison polarity (1 = greater than, 0 = less than).
14	Not used.
[13:0]	Data bits that match the format of the trigger source selection.

Table 27. ALM_SMPL1, ALM_SMPL2 Bit Descriptions

Bits	Description (Default = 0x0000)
[15:8]	Not used.
[7:0]	Data bits: number of samples (both 0x00 and 0x01 = 1).

Table 28. ALM_CTRL Bit Descriptions

Bits	Description (Default = 0x0000)
15	Rate-of-change enable for Alarm 2 (1 = rate of change, 0 = static level).
[14:12]	Alarm 2 source selection. 000 = disable. 001 = power supply output. 010 = gyroscope output. 011 = not used. 100 = not used. 101 = auxiliary ADC input. 110 = temperature output. 111 = not used.
11	Rate-of-change enable for Alarm 1 (1 = rate of change, 0 = static level).
[10:8]	Alarm 1 source selection (same as for Alarm 2).
[7:5]	Not used.
4	Comparison data filter setting (1 = filtered data, 0 = unfiltered data).
3	Not used.
2	Alarm output enable (1 = enabled, 0 = disabled).
1	Alarm output polarity (1 = active high, 0 = active low).
0	Alarm output line select (1 = DIO2, 0 = DIO1).

Table 29. Alarm Configuration Example 1

DIN	Description
0xA922, 0xA817	ALM_CTRL = 0x2217. Alarm 1 input = GYRO_OUT. Alarm 2 input = GYRO_OUT. Static level comparison, filtered data. DIO2 output indicator, positive polarity.
0xA181, 0xA000	ALM_MAG1 = 0x8100. Alarm 1 is true if GYRO_OUT > +18.755°/sec.
0xA33F, 0xA200	ALM_MAG2 = 0x3F00. Alarm 2 is true if GYRO_OUT < −18.755°/sec.

Table 30. Alarm Configuration Example 2

DIN	Description
0xA9AA, 0xA804	ALM_CTRL = 0xAA04. Alarm 1 input = GYRO_OUT. Alarm 2 input = GYRO_OUT. Rate-of-change comparison, unfiltered data. DIO1 output indicator, negative polarity.
0xB601	SMPL_PRD = 0x0001. Sample rate = 256 SPS.
0xA40A	ALM_SMPL1[7:0] = 0x000A. Alarm 1 rate of change period = 3.906 ms.
0xA60A	ALM_SMPL2[7:0] = 0x000A. Alarm 2 rate of change period = 3.906 ms.
0xA181, 0xA000	ALM_MAG1 = 0x8100. Alarm 1 is true if GYRO_OUT changes more than 18.755°/sec over a period of 3.906 ms.
0xA30F, 0xA200	ALM_MAG2 = 0x0F00. Alarm 2 is true if GYRO_OUT changes less than 18.755°/sec over a period of 3.906 ms.

PRODUCT IDENTIFICATION

Table 31 provides a summary of the registers that identify the product: PROD_ID, which identifies the product type; LOT_ID1 and LOT_ID2, the 32-bit lot identification code; and SERIAL_NUM, which displays the 16-bit serial number. All four registers are two bytes in length.

Table 31. Identification Registers

Register Name	Address	Description
LOT_ID1	0x52	Lot Identification Code 1
LOT_ID2	0x54	Lot Identification Code 2
PROD_ID	0x56	Product identification = 0x3F89 or 0x3F84 (0x3F89 = 16,265 decimal; 0x3F84 = 16,260 decimal)
SERIAL_NUM	0x58	Serial number

APPLICATIONS INFORMATION

ASSEMBLY

When developing a process flow for installing ADIS16260/ADIS16265 devices on printed circuit boards (PCBs), see the JEDEC J-STD-020C standard document for the reflow temperature profile and processing information. The ADIS16260/ADIS16265 can use the Sn-Pb eutectic process and the Pb-free eutectic process from this standard, with one exception, the peak temperature exposure is 240°C. For a more complete list of assembly process suggestions, see the ADIS162xx LGA Assembly Guidelines page on Engineer Zone. Figure 18 provides an example pattern for the location of the ADIS16260/ADIS16265 on a printed circuit board.

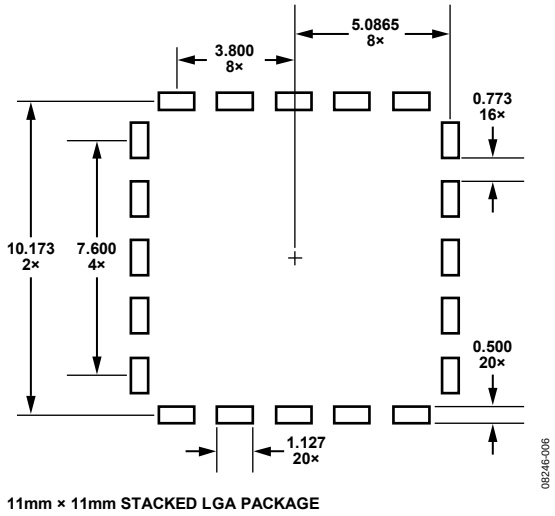

Figure 18. Recommended Pad Layout (Units in Millimeters)

BIAS OPTIMIZATION

Use the following steps to fine-tune the bias to an accuracy that approaches the in-run bias stability, 0.007°/sec (1 σ).

1. Apply 5 V and wait 10 sec.
2. Set SENS_AVG[10:8] = 001 (DIN = 0xB901).
3. Set GYRO_OFF = 0x0000 (DIN = 0x9400, DIN = 0x9500).
4. Collect GYRO_OUT data for 150 sec at a sample rate of 256 SPS.
5. Average data record.
6. Round to the nearest integer.
7. Multiply by −1.
8. Write to GYRO_OFF.
9. Update flash, set GLOB_CMD[3] = 1 (DIN = 0xBE08), and wait for >50 ms and resume operation.

The Allan Variance curve in Figure 6 provides a trade-off relationship between accuracy and averaging time. For example, an average time of 1 second produce an accuracy of ~0.035 °/sec (1 σ).

INTERFACE PRINTED CIRCUIT BOARD

The ADIS16265/PCBZ includes one ADIS16265BCCZ IC on a 1.2 inch × 1.3 inch PCB. The interface PCB simplifies the IC connection of these devices to an existing processor system. The four mounting holes accommodate either M2 (2 mm) or 2-56 machine screws. These boards are made of IS410 material and are 0.063 inches thick. The second-level assembly uses a SAC305-compatible solder composition, which has a presolder reflow thickness of approximately 0.005 inches.

The pad pattern on these PCBs matches that shown in Figure 20. J1 and J2 are dual-row, 2 mm (pitch) connectors that work with a number of ribbon cable systems, including 3M Part Number 152212-0100-GB (ribbon crimp connector) and 3M Part Number 3625/12 (ribbon cable). The schematic and connector pin assignments for the ADIS16265/PCBZ are shown in Figure 19.

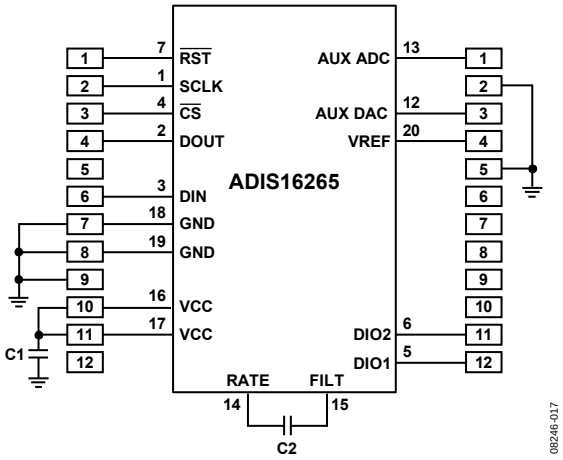

Figure 19. Electrical Schematic

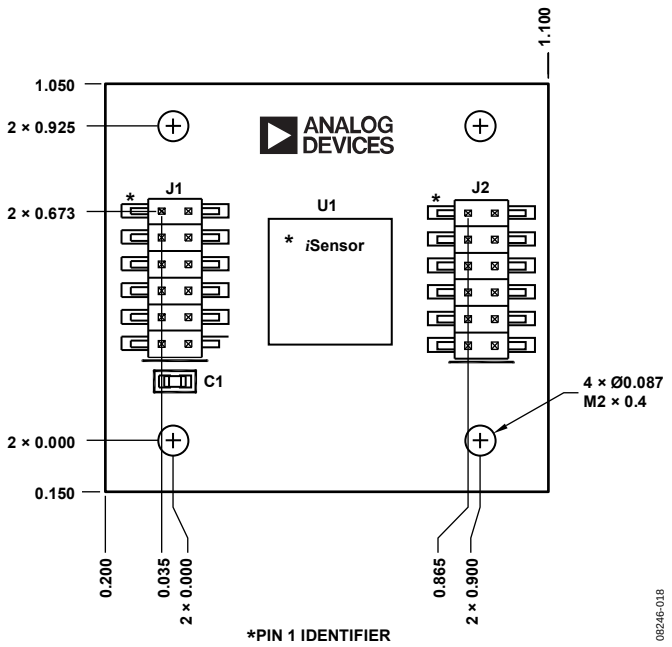

Figure 20. PCB Assembly View and Dimensions

OUTLINE DIMENSIONS

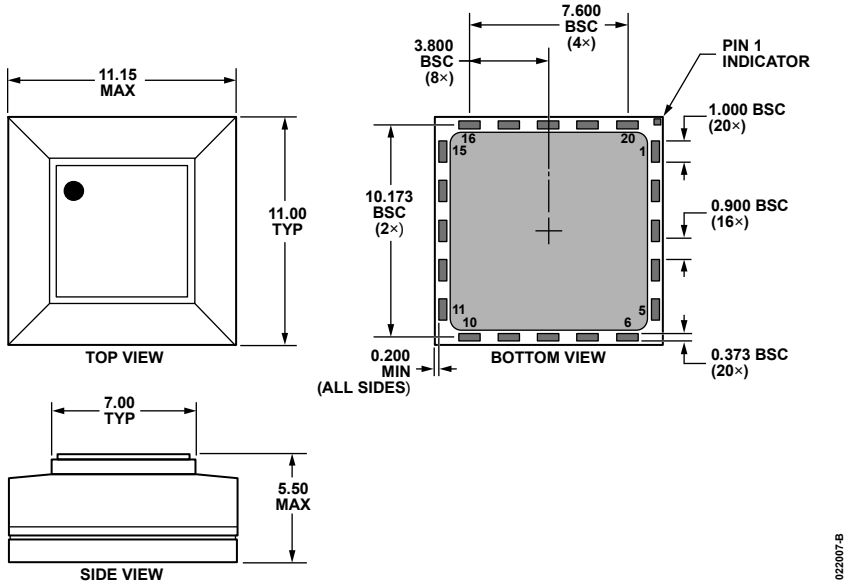

Figure 21. 20-Terminal Stacked Land Grid Array [LGA]
(CC-20-1)
Dimensions shown in millimeters

ORDERING GUIDE

Model[1]	Temperature Range	Package Description	Package Option
ADIS16260BCCZ	−40°C to +105°C	20-Terminal Stacked Land Grid Array [LGA]	CC-20-1
ADIS16265BCCZ	−40°C to +105°C	20-Terminal Stacked Land Grid Array [LGA]	CC-20-1
ADIS16265/PCBZ		Evaluation Board	

[1] Z = RoHS Compliant Part.

©2009–2018 Analog Devices, Inc. All rights reserved. Trademarks and registered trademarks are the property of their respective owners.
D08246-0-9/18(F)

Компания «ЭлектроПласт» предлагает заключение долгосрочных отношений при поставках импортных электронных компонентов на взаимовыгодных условиях!

Наши преимущества:

- Оперативные поставки широкого спектра электронных компонентов отечественного и импортного производства напрямую от производителей и с крупнейших мировых складов;
- Поставка более 17-ти миллионов наименований электронных компонентов;
- Поставка сложных, дефицитных, либо снятых с производства позиций;
- Оперативные сроки поставки под заказ (от 5 рабочих дней);
- Экспресс доставка в любую точку России;
- Техническая поддержка проекта, помощь в подборе аналогов, поставка прототипов;
- Система менеджмента качества сертифицирована по Международному стандарту ISO 9001;
- Лицензия ФСБ на осуществление работ с использованием сведений, составляющих государственную тайну;
- Поставка специализированных компонентов (Xilinx, Altera, Analog Devices, Intersil, Interpoint, Microsemi, Aeroflex, Peregrine, Syfer, Eurofarad, Texas Instrument, Miteq, Cobham, E2V, MA-COM, Hittite, Mini-Circuits,General Dynamics и др.);

Помимо этого, одним из направлений компании «ЭлектроПласт» является направление «Источники питания». Мы предлагаем Вам помощь Конструкторского отдела:

- Подбор оптимального решения, техническое обоснование при выборе компонента;
- Подбор аналогов;
- Консультации по применению компонента;
- Поставка образцов и прототипов;
- Техническая поддержка проекта;
- Защита от снятия компонента с производства.

Как с нами связаться

Телефон: 8 (812) 309 58 32 (многоканальный)
Факс: 8 (812) 320-02-42
Электронная почта: org@eplast1.ru
Адрес: 198099, г. Санкт-Петербург, ул. Калинина, дом 2, корпус 4, литера А.