Card Guides

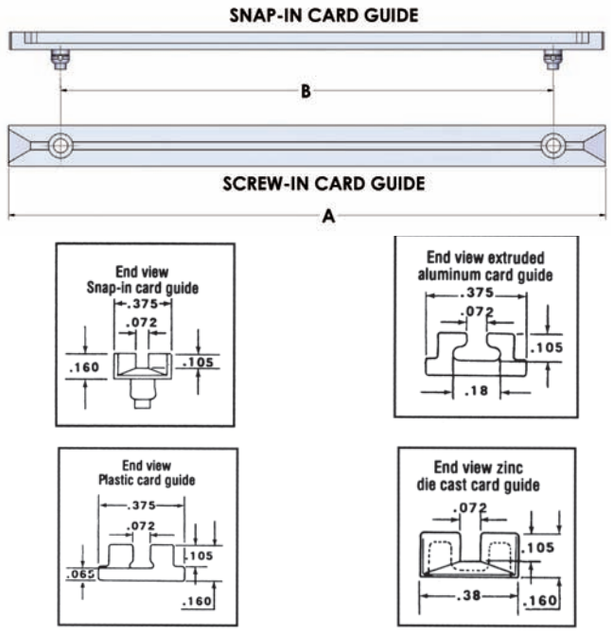

High quality card guides feature tapered slots for easy insertion. Snap-in nylon models provide easy installation and removal without tools, and can be positioned at 0.25" increments (64 0.156" holes on 0.250" centers) when used with Vector-Pak T-struts (TS169-6/90). Screw-mounted models (installation hardware included) are available in metal or plastic and provide variable positioning along entire length of strut. Holes for mounting guides to struts are based on center-to-center multiples of 0.75". All materials are flame retardant.

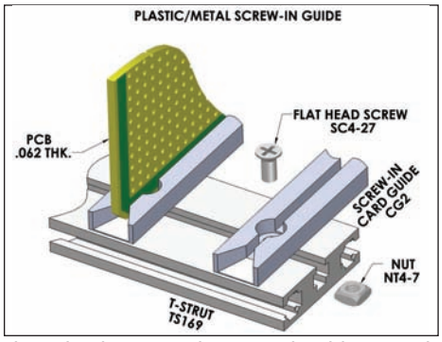

Metal or plastic screw down card guides attach with SC4-27/25 flat head screw and NT4-7PA square nut

Part No.	Type	Length A	Centers B	Card Length	Application
CG2-45P	Plastic, Screw	2.89"	2.25"	4.50"	
CG2-45S	Nylon, Snap-in	3.17"	2.25"	4.50"	Subrack series 12, 13, 14, 17, 18 & 100 and Vector P series sidewalls
CG2-50P	Plastic, Screw	4.39"	3.75"	5.00"	
CG2-65M	Metal, Die Cast Screw	5.42"	4.50"	6.50"	
CG2-65P	Plastic, Screw	5.42"	4.50"	6.50"	
CG2-65S	Nylon, Snap-in	5.42"	4.50"	6.50"	
CG2-80P	Plastic, Screw	6.64"	6.00"	8.00"	Subrack series 14, 15, 17, 18 and 100 and Vector P series sidewalls ending in 119 or 156
CG2-80S	Nylon, Snap-in	6.93"	6.00"	8.00"	
CG2-95M	Metal, Screw	8.14"	7.50"	9.50"	
CG2-95P	Plastic, Screw	8.14"	7.50"	9.50"	
CG2-95S	Nylon, Snap-in	8.43"	7.50"	9.50"	
CG2-135M	Metal, Screw	13.19"	12.55"	13.50"	CCA19
CG2-135P	Plastic, Screw	13.19"	12.55"	13.50"	

Packages of 12 ea. Screw down types include installation hardware and are available in custom lengths on request.

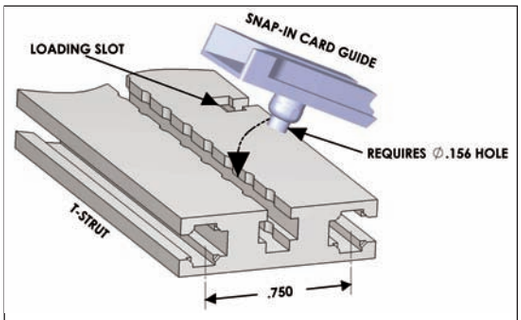

Snap-in Guide and TS169-6/90 Strut

EIA Subracks

Free Standing Connector Mounted Card Guides

Secure connection, rugged support of 0.062" thick PCB's when space is limited. P/N BR27D is die cast of zinc alloy#3 (ASTM B240-06). Other sizes are 6063 T5 aluminum alloy. All sizes include HD55 hardware kit to attach connector to board. Connector not included (See Page 70). All sold as a pair and are fully RoHS compliant.

Part No.	Use With Connector	For Use With	Material
BR27D	R644, R644-2, R644-3C, R644-3F	4.5"W (3677, 3682 & 3662 series), Page 57	Zinc #3
BR27-1	R636-1, R636-2	4.5"W (3719 series), Page 58	Al Alloy 6063 T5
BR27-3	R630	2.73"W (3797 series), Page 56	Al Alloy 6063 T5
BR27-5	R656-1, R656-2	4.5"W (4610 series), Page 63	Al Alloy 6063 T5

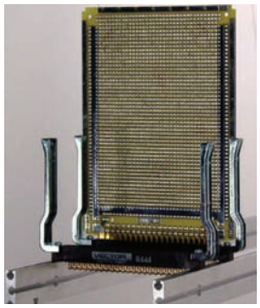

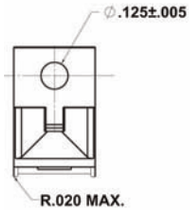

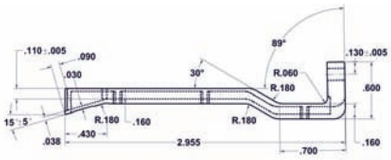

BR27D Zinc die-cast model shown

Details of BR27-1, -3 & -5 at www.vectorelect.com

REVISIONS				
ZONE	REV.	DESCRIPTION	DATE	APPROVED
ALL	F		01/08/09	

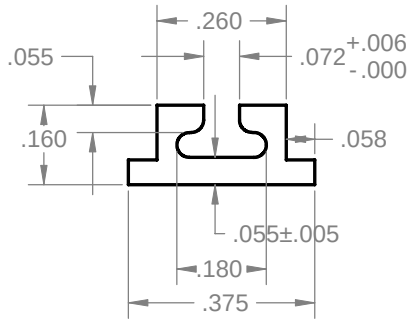

SECTION K-K
SCALE 4 : 1

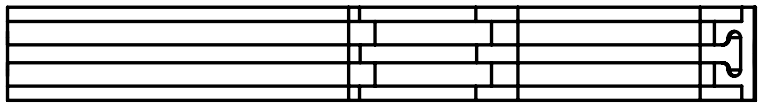

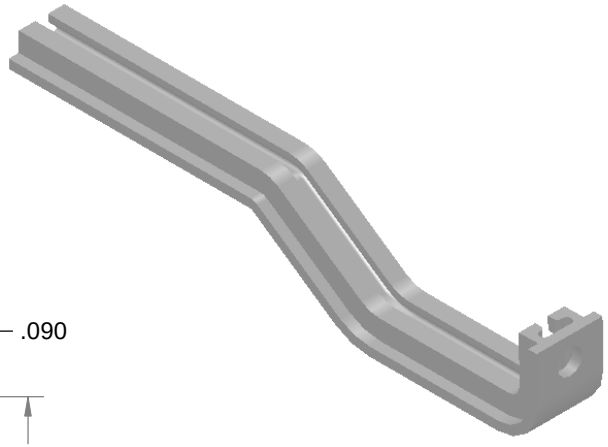

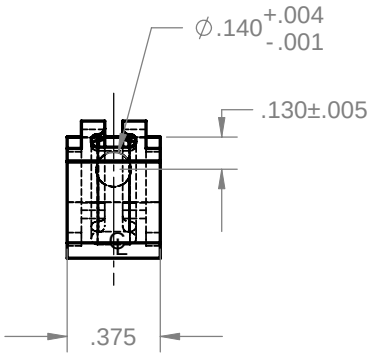

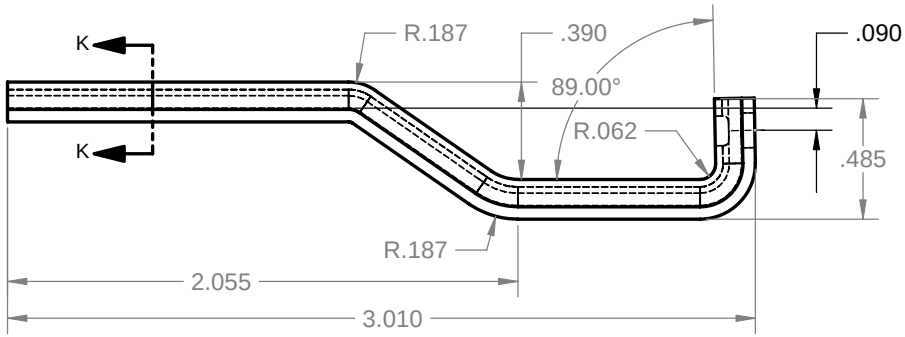

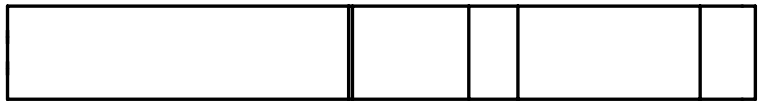

4. PARTS TO BE DEGREASED AFTER FABRICATION
3. PARTS TO BE FREE OF EXCESSIVE BURS AND SURFACE SCRATCHES
2. FINISH: CLEAR ANODIZE
1. MATERIAL: ALUM. EXTRUSION 6063-T5

NOTES: UNLESS OTHERWISE SPECIFIED.

PROPRIETARY AND CONFIDENTIAL
THE INFORMATION CONTAINED IN THIS DRAWING IS THE SOLE PROPERTY OF VECTOR ELECTRONICS & TECH., INC. ANY REPRODUCTION IN PART OR AS A WHOLE WITHOUT THE WRITTEN PERMISSION OF VECTOR ELECTRONICS & TECH., INC. IS PROHIBITED.

UNLESS OTHERWISE SPECIFIED:		NAME	DATE
DIMENSIONS ARE IN INCHES TOLERANCES: FRACTIONAL ± ANGULAR: ±.5° TWO PLACE DECIMAL ±.03 THREE PLACE DECIMAL ±.010 INTERPRET GEOMETRIC TOLERANCING PER:	DRAWN	TRUSHAR	01/08/09
	CHECKED		
	ENG APPR.		
	MFG APPR.		
	Q.A.		
MATERIAL 1	THIRD ANGLE PROJECTION		
FINISH 2			
DO NOT SCALE DRAWING			

VECTOR ELECTRONICS & TECHNOLOGY, INC
11115 VANOWEN ST., NORTH HOLLYWOOD, CA 91605

CARD GUIDE
BR27-3

SIZE	DWG. NO.	REV
B	M5474-1-8	F
SCALE: 1:1	WEIGHT:	SHEET 1 OF 1

REVISIONS				
ZONE	REV.	DESCRIPTION	DATE	APPROVED
ALL	F		01/08/09	

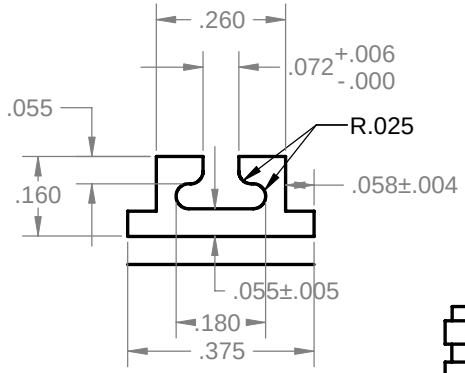

SECTION J-J
SCALE 4 : 1

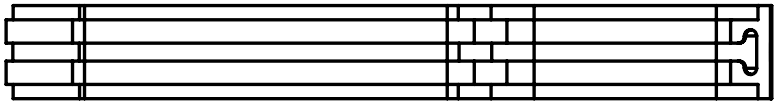

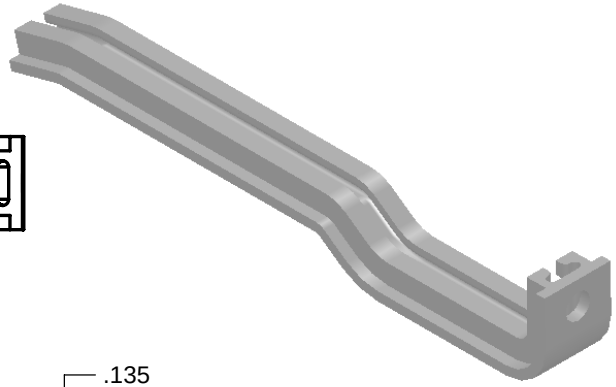

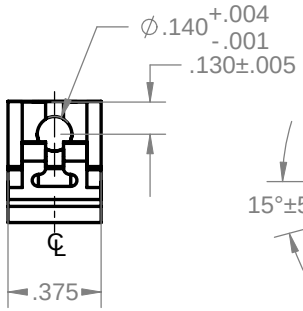

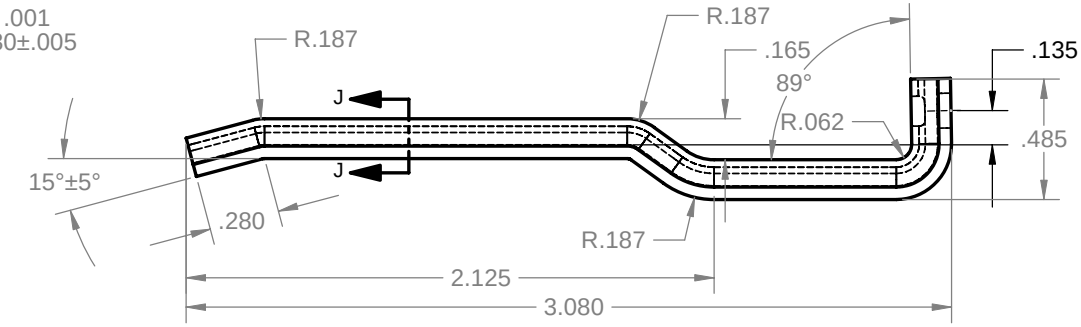

4. PARTS TO BE DEGREASED AFTER FABRICATION
3. PARTS TO BE FREE OF EXCESSIVE BURS AND SURFACE SCRATCHES
2. FINISH: CLEAR ANODIZE
1. MATERIAL: ALUM. EXTRUSION 6063-T5

NOTES: UNLESS OTHERWISE SPECIFIED.

PROPRIETARY AND CONFIDENTIAL
THE INFORMATION CONTAINED IN THIS DRAWING IS THE SOLE PROPERTY OF VECTOR ELECTRONICS & TECH., INC. ANY REPRODUCTION IN PART OR AS A WHOLE WITHOUT THE WRITTEN PERMISSION OF VECTOR ELECTRONICS & TECH., INC. IS PROHIBITED.

UNLESS OTHERWISE SPECIFIED:		NAME	DATE
DIMENSIONS ARE IN INCHES TOLERANCES: FRACTIONAL ± ANGULAR: ±.5° TWO PLACE DECIMAL ±.03 THREE PLACE DECIMAL ±.010 INTERPRET GEOMETRIC TOLERANCING PER:	DRAWN	TRUSHAR	01/08/09
	CHECKED		
	ENG APPR.		
	MFG APPR.		
	Q.A.		
MATERIAL 1	THIRD ANGLE PROJECTION		
FINISH 2			
DO NOT SCALE DRAWING			

VECTOR ELECTRONICS & TECHNOLOGY, INC
11115 VANOWEN ST., NORTH HOLLYWOOD, CA 91605

CARD GUIDE
BR27-1

SIZE	DWG. NO.	REV
B	M5474-1-5	F
SCALE: 1:1	WEIGHT:	SHEET 1 OF 1

REVISIONS				
ZONE	REV.	DESCRIPTION	DATE	APPROVED
ALL	F		01/08/09	

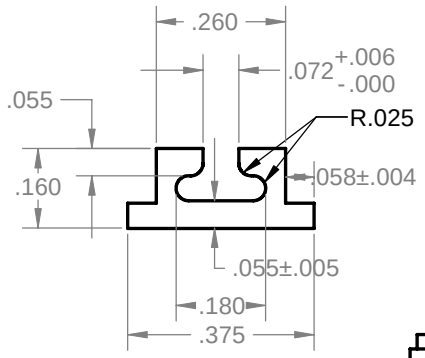

SECTION K-K
SCALE 4 : 1

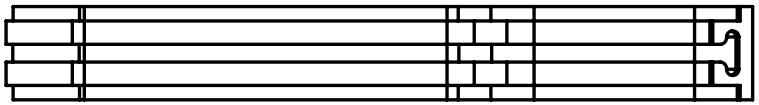

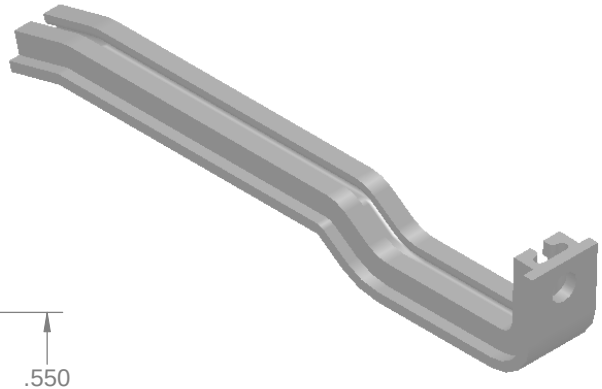

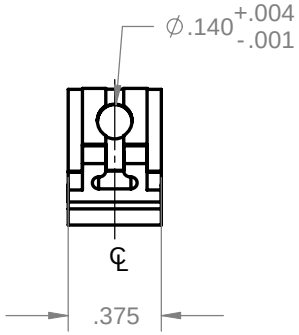

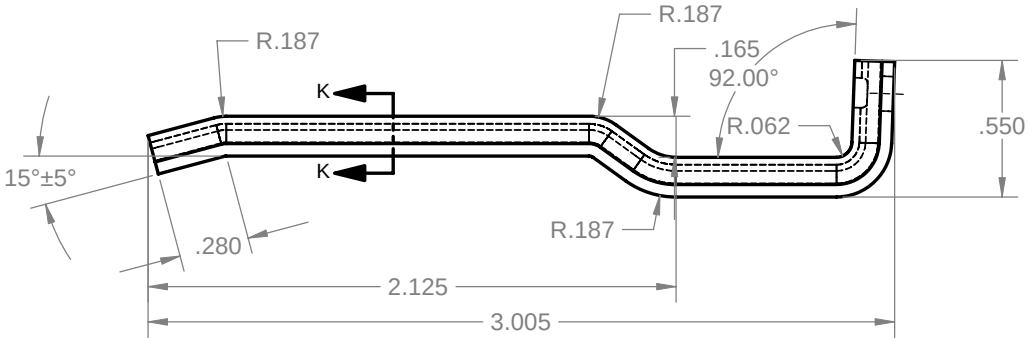

4. PARTS TO BE DEGREASED AFTER FABRICATION
3. PARTS TO BE FREE OF EXCESSIVE BURS AND SURFACE SCRATCHES
2. FINISH: CLEAR ANODIZE
1. MATERIAL: ALUM. EXTRUSION 6063-T5

NOTES: UNLESS OTHERWISE SPECIFIED.

PROPRIETARY AND CONFIDENTIAL
THE INFORMATION CONTAINED IN THIS DRAWING IS THE SOLE PROPERTY OF VECTOR ELECTRONICS & TECH., INC. ANY REPRODUCTION IN PART OR AS A WHOLE WITHOUT THE WRITTEN PERMISSION OF VECTOR ELECTRONICS & TECH., INC. IS PROHIBITED.

UNLESS OTHERWISE SPECIFIED:		NAME	DATE
DIMENSIONS ARE IN INCHES TOLERANCES: FRACTIONAL ± ANGULAR: ±.5° TWO PLACE DECIMAL ±.03 THREE PLACE DECIMAL ±.010 INTERPRET GEOMETRIC TOLERANCING PER:	DRAWN	TRUSHAR	01/08/09
	CHECKED		
	ENG APPR.		
	MFG APPR.		
	Q.A.		
MATERIAL 1	THIRD ANGLE PROJECTION		
FINISH 2			
DO NOT SCALE DRAWING			

VECTOR ELECTRONICS & TECHNOLOGY, INC
11115 VANOWEN ST., NORTH HOLLYWOOD, CA 91605

CARD GUIDE
BR27-5

SIZE	DWG. NO.	REV
B	M5474-1-12	F
SCALE: 1:1	WEIGHT:	SHEET 1 OF 1

Компания «ЭлектроПласт» предлагает заключение долгосрочных отношений при поставках импортных электронных компонентов на взаимовыгодных условиях!

Наши преимущества:

- Оперативные поставки широкого спектра электронных компонентов отечественного и импортного производства напрямую от производителей и с крупнейших мировых складов;
- Поставка более 17-ти миллионов наименований электронных компонентов;
- Поставка сложных, дефицитных, либо снятых с производства позиций;
- Оперативные сроки поставки под заказ (от 5 рабочих дней);
- Экспресс доставка в любую точку России;
- Техническая поддержка проекта, помощь в подборе аналогов, поставка прототипов;
- Система менеджмента качества сертифицирована по Международному стандарту ISO 9001;
- Лицензия ФСБ на осуществление работ с использованием сведений, составляющих государственную тайну;
- Поставка специализированных компонентов (Xilinx, Altera, Analog Devices, Intersil, Interpoint, Microsemi, Aeroflex, Peregrine, Syfer, Eurofarad, Texas Instrument, Miteq, Cobham, E2V, MA-COM, Hittite, Mini-Circuits,General Dynamics и др.);

Помимо этого, одним из направлений компании «ЭлектроПласт» является направление «Источники питания». Мы предлагаем Вам помощь Конструкторского отдела:

- Подбор оптимального решения, техническое обоснование при выборе компонента;
- Подбор аналогов;
- Консультации по применению компонента;
- Поставка образцов и прототипов;
- Техническая поддержка проекта;
- Защита от снятия компонента с производства.

Как с нами связаться

Телефон: 8 (812) 309 58 32 (многоканальный)
Факс: 8 (812) 320-02-42
Электронная почта: org@eplast1.ru
Адрес: 198099, г. Санкт-Петербург, ул. Калинина, дом 2, корпус 4, литера А.