har-flex® straight male connector

RoHS compliant

GENERAL INFORMATIONS

No. of contacts	from 6 to 100poles, all even numbers
Contact spacing	1,27mm x 1,27mm [0,050"x0,050"]
Test Voltage	500V
Contact resistance	< 25 mOhm
Insulation resistance	≥ 10x10^9Ω
Working current acc. to IEC 60512, at 70°C, 80% derating	see derating diagram
Working temperature range	-55°C ... +125°C
Termination technology	SMT
Reflow processing temperature (acc. to ECA/IPC/JEDEC J-STD-075 Level PSL R0)	min. 150s > 217°C min. 30s > 240°C
Clearance & creepage distance	0,4mm min.
Insertion force (depending on mating connector)	approximately 0,5N/contact
Withdrawal force (depending on mating connector)	approximately 0,5N/contact
Mating cycles	PL1 : 500 mating cycles PL2 : 250 mating cycles
RoHS - compliant	Yes
Leadfree	Yes
Working voltage acc. to to IEC 60664-1	100V / 150V (depending on installation category)
UL file acc. UL 1977	ECBT2.E102079
UL file acc. CSA-C22.2 (for Canada)	ECBT8.E102079
PSL level acc. ECA/IPC/JEDEC J-STD-075	PSL R0
MSL level acc. ECA/IPC/JEDEC J-STD-020D	MSL 1

INSULATOR MATERIAL

Material	LCP (liquid crystalline polymer)
Color	Black
UL classification	UL94-V0
Material group acc. IEC 60664-1	IIIa (175 ≤ CTI < 400)

CONTACT MATERIAL

Contact material	Copper alloy
Plating termination zone	Sn
Plating contact sliding side	Au over PdNi (acc. to Performance level)

DERATING DIAGRAM acc. to IEC 60512-5 (Current carrying capacity)

The current carrying capacity is limited by maximum temperature of materials for inserts and contacts including terminals.
The current capacity curve is valid for continuous, non interrupted current loaded contacts of connectors when simultaneous power on all contacts is given, without exceeding the maximum temperature.

Control and test procedures according to DIN IEC 60512-5

derating curve at Imax*0,8 (IEC 60512-5-2)

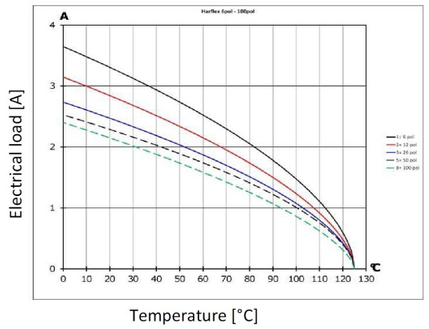

RECOMMENDATION FOR SOLDER PROCESSING

Solder paste recommendation

The har-flex connectors are solderable with established lead-free SAC / SnNi solder but also leaded solder e.g. SnPb40

PCB pad plating

The har-flex connectors are solderable on lead-free pad surfaces like HAL, NiAu, Immersion Sn.

Stencil recommendation

The solder deposition has to be placed on the pad area of the contact solder tines.
Ideally, the solder deposition has the same length-to-width ratio and center point like the PCB pads.
The size of the solder stencil apertures is depending on the thickness of the stencil.
In general, the thinner stencils will need larger apertures to result in the required volume of solder paste.
The minimum required solder paste volume for the signal pins is 0,094mm³, for the hold down it is 0,33mm³.
For example, this can be achieved with the following stencil data :

	Signal pins		
Stencil thickness	PCB pad size	proposal stencil aperture size	calculated solder paste volume
120 µm	1,1 x 0,8 mm	1,05 x 0,75 mm	0,095 mm³
150 µm	1,1 x 0,8 mm	0,99 x 0,72 mm	0,107 mm³

	Hold-downs		
Stencil thickness	PCB pad size	proposal stencil aperture size	calculated solder paste volume
120 µm	2,5 x 1,2 mm	2,45 x 1,15 mm	0,338 mm³
150 µm	2,5 x 1,2 mm	2,25 x 1,08 mm	0,365 mm³

If a stencil with lower thickness shall be used, please insure the minimum required solder paste volume by enlarging the stencil aperture. Depending on the PCB design, the solder depostion may protrude the PCB pads. But to achieve a good sealing during solder paste printing and to reduce the cleaning interval of the stencil, the aperture should be smaller than the PCB pad about 10% or 25µm encircliing.

Coplanarity of contacts

All connectors are tested for coplanarity of contacts and are in the range of 6 pin to 80 pin: ≤ 0,1mm
82 pin to 100 pin: ≤ 0,15mm

Performance level

Performance level 1 (recommended for majority of applications)
Initial 250 mating cycles, 10 days gas test (25°C / 75% r.h.) using H2S 10 ppb, NO2 200 ppb, CL2 10 ppb, SO2 200 ppb.
Measurement of contact resistance. The remaining 250 mating cycles are subject to measurement of contact resistance and visual inspection.
Visual inspection. No abrasion of the contact finish through to the base material. No functional impairment.
Part number definition : 15 .. ... 2... ...

Performance level 2
Initial 125 mating cycles, 4 days gas test (25°C / 75% r.h.) using H2S 10 ppb, NO2 200 ppb, CL2 10 ppb, SO2 200 ppb.
Measurement of contact resistance. The remaining 125 mating cycles are subject to measurement of contact resistance and visual inspection.
Visual inspection. No abrasion of the contact finish through to the base material. No functional impairment.
Part number definition : 15 .. ... 6... ...

Performance level S4
Defined contact surface of min. 0,06 µm Au over 0,7+0,2µm PdNi
Part number definition : 15 .. ... 5... ...

All Dimensions in mm
Original Size DIN A3

Scale	Free size tol.	Ref.
1:1		Sub.

All rights reserved

Department	Created by	Inspected by	Standardisation	Date	State
EC PD - CN	ZHUANGJ	LUOK	HOFFMANN	2018-05-21	Final Release

Title: har flex male stacking height1.75 and 3.25

Doc-Key / ECM-Nr.: 100577896/UGD/001/B 500000135280

Type: DS | Number: 15111100301 | Rev.: B | Page: 1/2

HARTING Electronics GmbH
D-32339 Espelkamp

A3

har-flex® straight male connector

RoHS compliant

TAPE LAYOUT & PACKAGING

Tape acc. to IEC 60286-3

Reel off direction

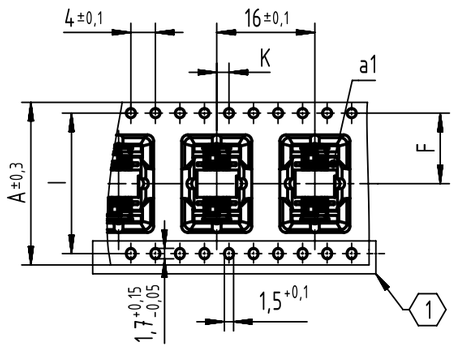

Tape dimensions:	A	F	I	K
poles 06 to 12	24,0	11,5±0,1	-	2±0,1
poles 14 to 20	32,0	14,2±0,1	28,4	2±0,1
poles 22 to 40	44,0	20,2±0,15	40,4	2±0,15
poles 42 to 56	56,0	26,2±0,15	52,4	2±0,15
poles 58 to 80	72,0	34,2±0,3	68,4	2±0,2
poles 82 to 100	88,0	42,2±0,3	84,4	2±0,2

(1) NO DOUBLE SPROCKET HOLES FOR 06, 08, 10 AND 12 POLE NUMBERS (TAPE SIZE 24)

Pick & place pad 6,4±0,1 x 4,5±0,1

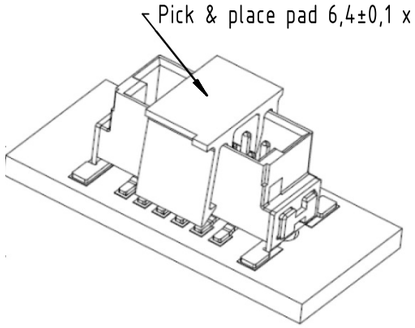

Packaging indices ("XXX" in part number)		
Index	Packaging unit	Packaging
000	280	Tape & reel
333	1	Tape

REEL DIMENSIONS

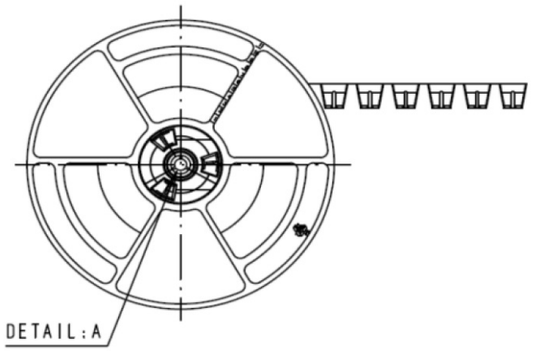

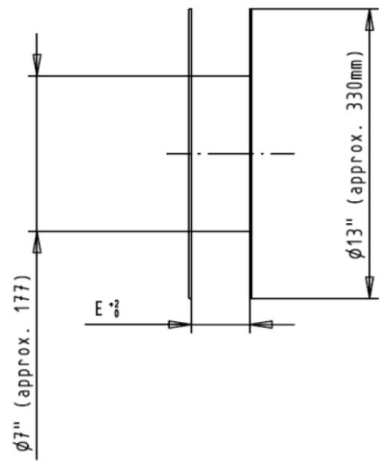

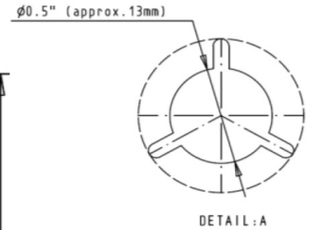

Reel dimensions:	E
Poles 06 to 12	24,4
Poles 14 to 20	32,4
Poles 22 to 40	44,4
Poles 42 to 56	56,4
Poles 58 to 80	72,4
Poles 82 to 100	88,4

APPLICATION INFORMATION

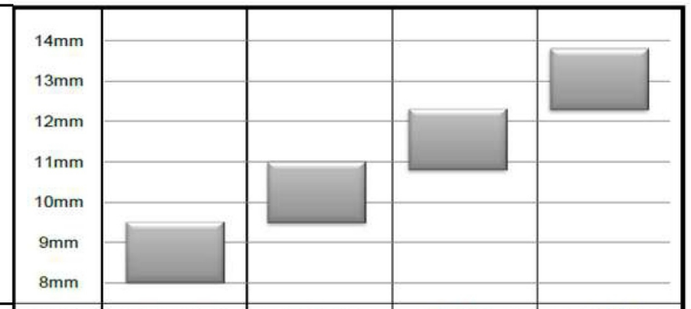

X & Y	stacking heights	male 1.75mm female 6.25mm	male 3.25mm female 6.25mm	male 1.75mm female 9.05mm	male 3.25mm female 9.05mm
S	PCB distance	8mm - 9.5mm	9.5mm - 11mm	10.8mm - 12.3mm	12.3mm - 13.8mm
	part numbers	15 11 ... 15 21 ...	15 12 ... 15 21 ...	15 11 ... 15 22 ...	15 12 ... 15 22 ...

straight female

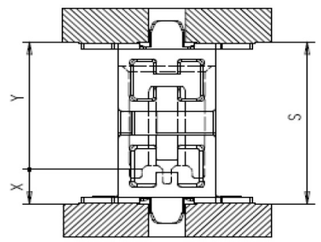

straight male

3,25	9,05	12,3	13,8
1,75	9,05	10,8	12,3
3,25	6,5	9,5	11
1,75	6,25	8	9,5
X	Y	Smin	* Smax

*Smax = Smin +1.5 wiping length
with additional contact overlap security

angled female

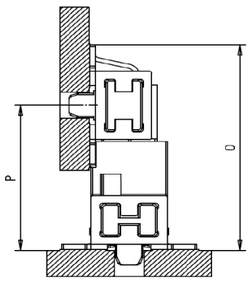

straight male

3,25	10,25	14,08
1,75	8,75	12,58
X	P min.	0

Admissible inclination

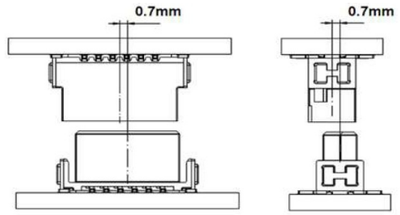

Admissible mismating

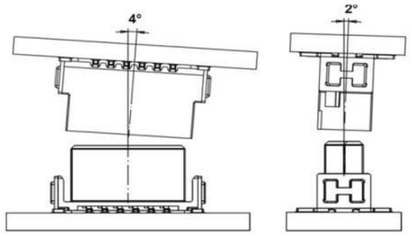

All Dimensions in mm Original Size DIN A3	Scale 1:1	Free size tol.		Ref. / Sub.	
All rights reserved	Created by ZHUANGJ	Inspected by LUOK	Standardisation HOFFMANN	Date 2018-05-21	State Final Release
Department EC PD - CN	Title: har flex male stacking height1.75 and 3.25				Doc-Key / ECM-Nr. 100577896/UGD/001/B 500000135280
HARTING Electronics GmbH D-32339 Espelkamp	Type DS	Number 15111100301		Rev. B	Page 2/2

A3

Mouser Electronics

Authorized Distributor

Click to View Pricing, Inventory, Delivery & Lifecycle Information:

HARTING:

15111002601000	15121002601000	15110062601000	15110082601000	15110102601000	15110122601000
15110142601000	15110162601000	15110182601000	15110202601000	15110222601000	15110242601000
15110262601000	15110282601000	15110302601000	15110322601000	15110362601000	15110382601000
15110422601000	15110442601000	15110462601000	15110482601000	15110502601000	15110522601000
15110542601000	15110562601000	15110582601000	15110602601000	15110622601000	15110642601000
15110662601000	15110682601000	15110702601000	15110722601000	15110742601000	15110762601000
15110782601000	15110802601000	15110822601000	15110842601000	15110862601000	15110882601000
15110902601000	15110922601000	15110942601000	15110962601000	15110982601000	15120062601000
15120082601000	15120102601000	15120122601000	15120142601000	15120162601000	15120182601000
15120202601000	15120222601000	15120242601000	15120262601000	15120282601000	15120302601000
15120322601000	15120342601000	15120362601000	15120382601000	15120402601000	15120422601000
15120442601000	15120462601000	15120482601000	15120502601000	15120522601000	15120542601000
15120562601000	15120582601000	15120602601000	15120622601000	15120642601000	15120662601000
15120682601000	15120702601000	15120722601000	15120742601000	15120762601000	15120782601000
15120802601000	15120822601000	15120842601000	15120862601000	15120882601000	15120902601000
15120922601000	15120942601000	15120962601000	15120982601000	15120162601333	

Компания «ЭлектроПласт» предлагает заключение долгосрочных отношений при поставках импортных электронных компонентов на взаимовыгодных условиях!

Наши преимущества:

- Оперативные поставки широкого спектра электронных компонентов отечественного и импортного производства напрямую от производителей и с крупнейших мировых складов;
- Поставка более 17-ти миллионов наименований электронных компонентов;
- Поставка сложных, дефицитных, либо снятых с производства позиций;
- Оперативные сроки поставки под заказ (от 5 рабочих дней);
- Экспресс доставка в любую точку России;
- Техническая поддержка проекта, помощь в подборе аналогов, поставка прототипов;
- Система менеджмента качества сертифицирована по Международному стандарту ISO 9001;
- Лицензия ФСБ на осуществление работ с использованием сведений, составляющих государственную тайну;
- Поставка специализированных компонентов (Xilinx, Altera, Analog Devices, Intersil, Interpoint, Microsemi, Aeroflex, Peregrine, Syfer, Eurofarad, Texas Instrument, Miteq, Cobham, E2V, MA-COM, Hittite, Mini-Circuits,General Dynamics и др.);

Помимо этого, одним из направлений компании «ЭлектроПласт» является направление «Источники питания». Мы предлагаем Вам помощь Конструкторского отдела:

- Подбор оптимального решения, техническое обоснование при выборе компонента;
- Подбор аналогов;
- Консультации по применению компонента;
- Поставка образцов и прототипов;
- Техническая поддержка проекта;
- Защита от снятия компонента с производства.

Как с нами связаться

Телефон: 8 (812) 309 58 32 (многоканальный)
Факс: 8 (812) 320-02-42
Электронная почта: org@eplast1.ru
Адрес: 198099, г. Санкт-Петербург, ул. Калинина, дом 2, корпус 4, литера А.