WIRE SIZE AWG	WIRE SIZE METRIC	INSULATION DIAMETER REF.	MVL UNSEALED PART NO.	MVL MATL TYPE PLATE OPT.	DELPHI UNSEALED PLATED PART NO.	DELPHI PART REV.	DELPHI UNPLATED PART NO.*	DELPHI PART REV.	MVL SEALED PART NO.	MVL MATL TYPE PLATE OPT.	DELPHI SEALED PLATED PART NO.	DELPHI PART REV.	DELPHI UNPLATED PART NO.*	DELPHI PART REV. UNPLATED	GAGE STAMP	A	B	Ø (C1)	C2	Ø (D1)	D2	K	L	(V)	(W)	TYPE OF GRIP
10/12	4.0/6.0	4.3/3.0							---	2,7	33400513	01			10AG	5.6	7.6	2.30	3.4	5.00	6.0	0.30	1.10	31.2	8.0	SEALED
									54001027	1,5	15516298	01			10											
			---	2,7	33400512	01									10AG		6.8			3.20	4.5		1.00	30.7	7.5	UNSEALED
			54001020	2,3	15512730	01	15519823	01							10AUS											
			54001001	1,5	10762774	03									10											
2.5	2.5/3.0	3.4/3.0							F235410	2,7					12AG	5.6	7.6	2.30	3.2	4.60	5.7	0.30	1.00	31.2	8.0	SEALED
									F535410	3,6					12TS											
									F808800	1,5	15509074	01			12											
															12AG		---			---	---		---	---	---	UNSEALED NOT AVAILABLE
															12TS											
															12											
14/16	1.0/1.5	2.8/2.1							F035410	2,7					14AG	4.3	6.4	1.45	2.6	4.20	5.6	---	1.40	31.2	8.0	SEALED
									F335410	3,6					14TS											
									54001447	1,5					14											
			---	2,7	33400514	01									14AG		5.1			2.25	3.5		0.60	30.7	7.5	UNSEALED
			---	2,4	33400515	01									14AUA											
			54001441	2,3	13681974	01	15519825	01							14AU											
			54001401	1,5	10757692	03									14											
2(18/20)	2(1.0/0.5)	2(2.2/1.4)	54001301	1,5	10757693	03									13	4.4	6.3	1.00	3.1	1.75	4.3	---	0.60	30.7	7.5	UNSEALED
18/20	1.0/0.5	2.2/1.4							F135410	2,7					18AG	3.4	5.5	1.00	2.3	3.60	4.5	---	1.10	31.2	8.0	SEALED
									F435410	3,6					18TS											
									54001877	1,5					18											
			---	2,7	33400516	01									18AG		4.2			1.75	3.0		0.60	30.7	7.5	UNSEALED
			F875200	2,4	15509076	01	15520221	01							18AUA											
			54001819	2,2	15425613	02	15519829	01							18AUD											
			54001818	2,3	15435215	01	15519827	01							18AUS											
			54001804	2,1	13805590	01	15519824	01							18AU											
			54001801	1,5	10762775	03									18											
22	0.35	1.8/1.2	F975200	2,4	15520916	01	15520917	01							22AUA	3.1	3.6	1.00	2.2	1.40	2.7	---	0.60	30.7	7.5	UNSEALED
			54002230	2,3	33501642	01									22AUS											
			54002229	2,2	15520890	01	15520918	01							22AUD											
			54002228	2,1											22AU											
			54002201	1,5	10762776	03									22											

CABLE * SEAL (CS) UNSEALED (US)	WIRE SIZE AWG	WIRE SPEC. AWG	WIRE SIZE METRIC	WIRE SPEC METRIC	CONDUCTOR CRIMP HEIGHT AWG (SECT C-C) (+/-0.05)	CONDUCTOR CRIMP HEIGHT METRIC (SECT C-C) (+/-0.05)	CONDUCTOR CRIMP WIDTH (SECT C-C) (+/-0.10)	INSULATION CRIMP HEIGHT AWG (SECT D-D) (+/-0.05)	INSULATION CRIMP HEIGHT METRIC (SECT D-D) (+/-0.05)	INSULATION CRIMP WIDTH (SECT D-D) (+/-0.10)	INSULATION CRIMP PUNCH OPTION	INSL. GRIP FORM TYPE SECD-D
US	22	ESB-MIL123-A MS-8288	0.35	FLRY A-B ISO-6722	1.40	1.30	2.05	1.95	1.95	2.60	OPTION 2	2
CS	18		0.75/1.00		1.50	1.30/1.50	2.45	4.20*	4.15/4.20*	4.10*		2
	20		0.50		1.30	1.25		4.05*	4.05			2
US	18		0.75/1.00		1.50	1.30/1.50		2.35	2.35/2.45	2.80		2
	20		0.50		1.30	1.25		2.20	2.20			2
CS	14		2.00/2.50		1.95	1.75/1.80	3.05	5.00*	4.80/5.00*	5.20*		2
	16		1.50		1.80	1.70		4.50/3.5*	4.50*			2
US	14		2.00/2.50		1.95	1.75/1.80		3.20	3.10*/3.25	3.60		2
	16		1.50		1.80	1.70		2.90	3.00			2
US	2(18/20)		2(1.0-0.5)		1.90-1.60*	1.90-1.60*	3.25	3.7-2.3*	3.7-2.3*	4.30*	OPTION 1	1
CS	N/A		2.5		N/A	1.80	3.45	N/A	5.00	5.20	OPTION 2	2
US	N/A		2.5					N/A	N/A	N/A		2
CS	10		5.00/6.00		2.45	2.40*/2.50*	3.85	5.70*	5.7/5.9*	5.80*		2
	12		4.00		2.20	2.05		5.30*	5.50*			2
US	10		5.00/6.00		2.45	2.40*/2.50*		3.70	4.30	4.35	OPTION 1	1
	12		4.00		2.20	2.30		USE 12 GA TERMINAL	4.20			1

* NOT VERIFIED TO USCAR-21

CRIMP WIDTH	CORE/INSULATION	INSULATION CRIMP OPTION	E ±0.03	F ±0.03	G ±0.03	J ±0.03	K ±0.03	L ±0.03 OFFSET BETWEEN ANVILS	M ±0.03	N ±0.03	P ±0.03	R ±0.03	S ±0.03	T ±0.03	U ±0.03
2.05	CONDUCTOR	---	0.92	0.53	0.12	2.56	1.99	---	1.97	---	---	---	---	---	---
2.45	CONDUCTOR	---	1.09	0.63	0.16	3.06	2.38	---	2.36	---	---	---	---	---	---
2.60	INSULATION	2	---	---	---	---	---	0.60	---	0.16	3.25	2.53	2.50	N/A	N/A
2.80	INSULATION	2	---	---	---	---	---	0.60	---	0.18	3.50	2.72	2.69	N/A	N/A
3.05	CONDUCTOR	---	1.36	0.79	0.22	3.81	2.96	---	---	---	---	---	---	---	---
3.25	CONDUCTOR	---	1..45	0.84	0.22	4.06	3.12	---	---	---	---	---	---	---	---
3.45	CONDUCTOR	---	1.54	0.89	0.24	4.31	3.35	---	3.32	---	---	---	---	---	---
3.60	INSULATION	2	---	---	---	---	---	0.60	---	0.25	4.50	3.50	3.46	N/A	N/A
3.85	CONDUCTOR	---	1.72	0.99	0.28	4.81	3.70	---	---	---	---	---	---	---	---
4.10	INSULATION	2	---	---	---	---	---	0.60	---	0.30	5.12	3.98	3.94	N/A	N/A
4.30	INSULATION	1	---	---	---	---	---	0.60	---	0.32	5.38	4.17	4.13	1.92	1.11
4.35	INSULATION	1	---	---	---	---	---	1.10	---	0.38	5.10	4.70	4.64	---	---
5.20	INSULATION	2	---	---	---	---	---	1.00	---	0.40	5.50	5.00	4.94	---	---
5.80	INSULATION	2	---	---	---	---	---	1.00	---	0.47	6.10	5.60	5.52	---	---

CRIMP TOOL INFORMATION (REF. ONLY)

MATERIAL TYPE: PLATING OPT.	TYPE 2 OPTION # 1	TYPE 2 OPTION # 2	TYPE 2 OPTION # 3	TYPE 2 OPTION # 4	TYPE 1 OPTION # 5	TYPE 3 OPTION # 6	TYPE 2 OPTION # 7
PLATING	POST GOLD FLASH PALLADIUM (SHORTING BAR)	POST GOLD (SHORTING BAR)	POST HEAVY PALLADIUM-GOLD FLASH (IN LINE)	POST PALLADIUM- GOLD (IN LINE)	PRE-HOT DIP TIN (IN LINE)	PRE TIN/SILVER (INLINE)	POST SILVER (IN LINE)
ZONE "A"	SULFIMATE DUCTILE NICKEL (54)	SULFIMATE DUCTILE NICKEL (57)	SULFIMATE DUCTILE NICKEL (61)	SULFIMATE DUCTILE NICKEL (65)	HOT DIP TIN PLATE (69)	TIN SILVER PLATE (72)	ELECTRO DEPOSITED PURE SILVER, NICKLE UNDERPLATE NOT REQ. (75)
ZONE "B"	ELECTRO MATT TIN PLATE (55)	ELECTRO MATT TIN PLATE (58)	ELECTRO MATT TIN PLATE (62)	ELECTRO MATT TIN PLATE (66)	HOT DIP TIN PLATE (70)	TIN SILVER PLATE (73)	ELECTRO MATT TIN PLATE (76)
ZONE "C"	C-1, C-3: PLATE WITH HARD GOLD CAP OVER PURE PALLADIUM.	C-1, C-3: PLATE WITH HARD GOLD CAP (59)	C2 ONLY: PLATE WITH HARD GOLD CAP OVER PURE PALLADIUM (63)	C2 ONLY: PLATE WITH HARD GOLD CAP OVER PURE PALLADIUM (67)	----	----	----
ZONE "D"	ELECTRO MATT TIN PLATE (56)	ELECTRO MATT TIN PLATE (60)	ELECTRO MATT TIN PLATE (64)	ELECTRO MATT TIN PLATE (68)	HOT DIP TIN PLATE (71)	TIN SILVER PLATE (74)	ELECTRO MATT TIN PLATE (77)

MVL REWOUND PART NO.	DELPHI REWOUND PART NO.	DELPHI REV.	MVL PART NO. (MADE FROM)	DELPHI PART NO. (MADE FROM)
54001001RWC	15512726	01	54001001	10762774
F808800RWA	15512734	01	F808800	15509074
54001441RWC	15522351	01	54001441	13681974
54001401RWA	15425613	02	54001401	10757692
54001401RWC	13969990	01		
54001301RWA	13681974	01	54001301	10757693
54001819RWA	15512733	01	54001819	15425613
54001819RWC	15513652	01		
54001818RWA	15516296	01	54001818	15435215
54001818RWC	13971791	01		
54001804RWA	15512732	01	54001804	13805590
54001804RWC	15516297	01		
54001801RWA	15516294	01	54001801	10762775
54001801RWC	13751022	01		
54002230RWA	15512731	01	54002230	33501642
54002201RWA	15512725	01	54002201	10762776
54002201RWC	13969981	01		

Available Types RWA or RWC

SEE REELING OPTIONS VIEW BELOW

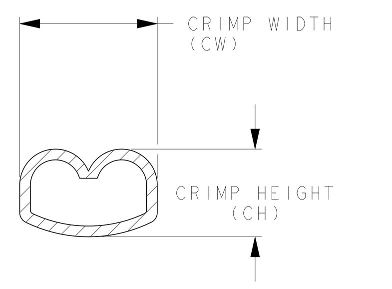

CONDUCTOR CRIMP

SECTION B-B SCALE 8:1

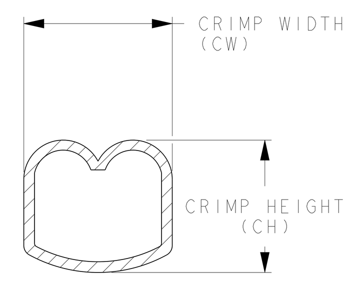

INSULATION CRIMP OPTION 1

SECTION C-C SCALE 8:1

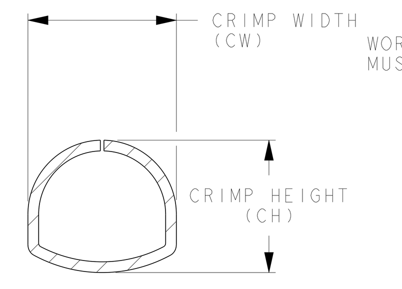

INSULATION CRIMP OPTION 2

SECTION C-C SCALE 8:1

STANDARD "B" FORM TOOLING DESIGN CONDUCTOR CRIMP

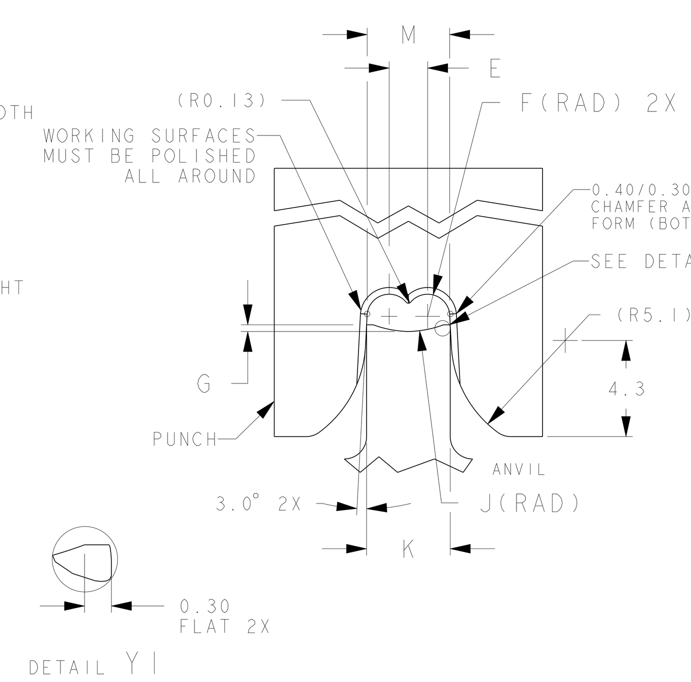

STANDARD "B" FORM TOOLING DESIGN INSULATION CRIMP OPTION 1

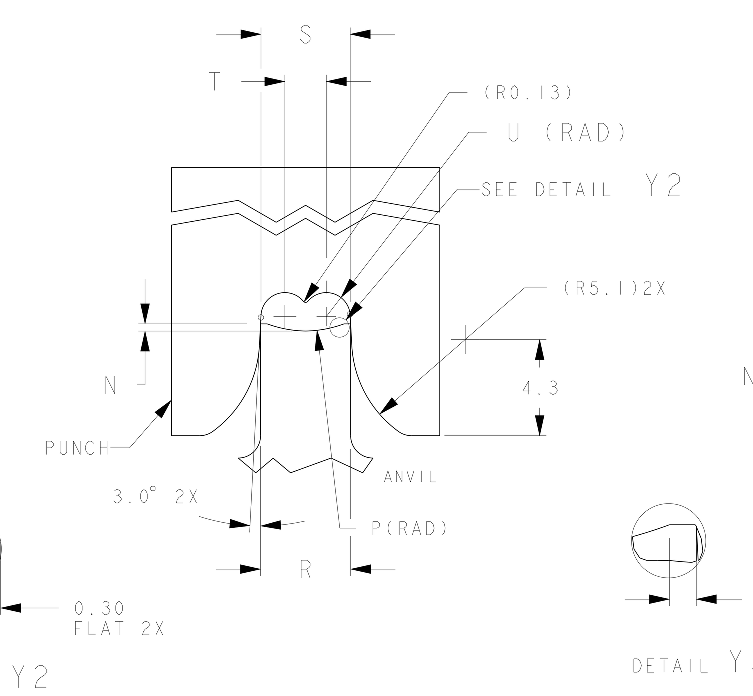

STANDARD "D" FORM TOOLING DESIGN INSULATION CRIMP OPTION 2

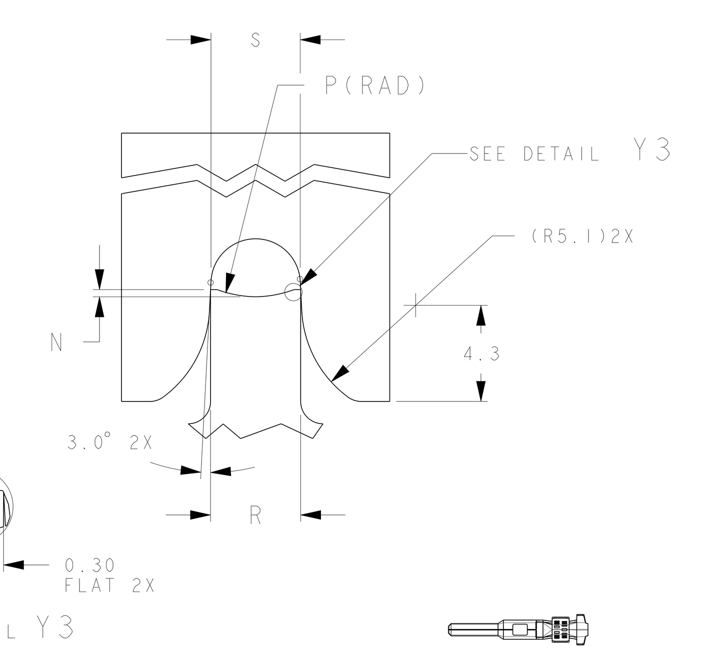

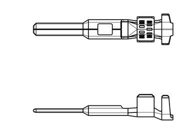
ACTUAL SIZE

ENLARGED VIEW OF BLADE TIP COIN.

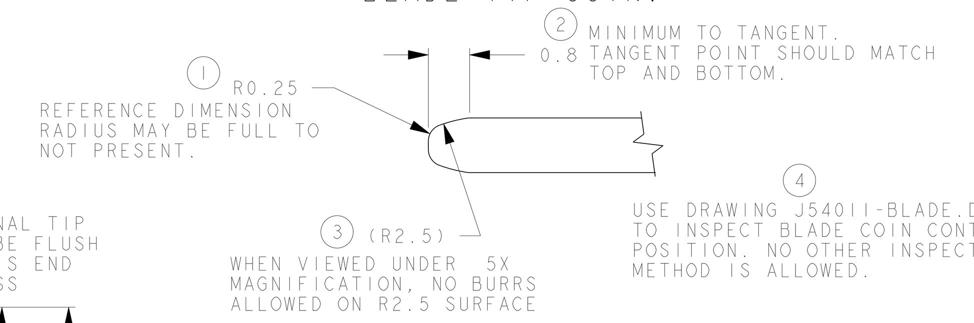

(4) USE DRAWING J54011-BLADE.DWG TO INSPECT BLADE COIN CONTOUR AND POSITION. NO OTHER INSPECTION METHOD IS ALLOWED.

GAGE REQUIREMENTS

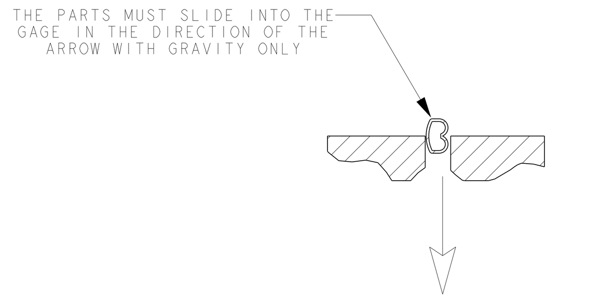

SECTION THRU CORE WING

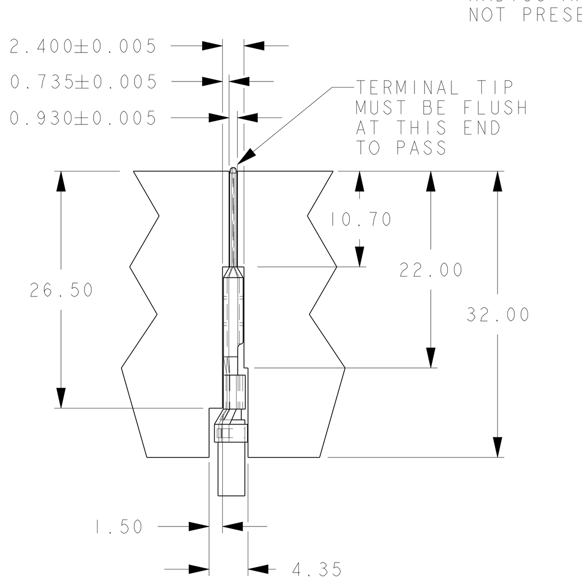

2 PLACES DIMENSION TOLERANCE ±0.03 UNLESS OTHERWISE SPECIFIED

UNLESS OTHERWISE SPECIFIED:

1. BLADE TERMINAL CRIMPING GAGE FOR ALL TERMINALS WITH WIRE CODE 18, 14 AND 13
2. ALL CRIMPED PARTS MUST PASS BOTH THIS GAGE AND PULL TEST REQUIREMENTS. A MINIMUM OF THREE PARTS PER APPLICATOR DIE MUST BE CHECKED HOURLY OR FOR EACH 3000 PIECE LOT, WHICHEVER COMES FIRST.
3. CRIMPED PARTS, INCLUDING WIRE STRANDS MUST FREELY INSTALL INTO GAGE SHOWN ABOVE TO BE ACCEPTABLE. ANY PARTS THAT DO NOT PASS THIS GAGE MUST BE EITHER SCRAPPED OR 100% REWORKED.

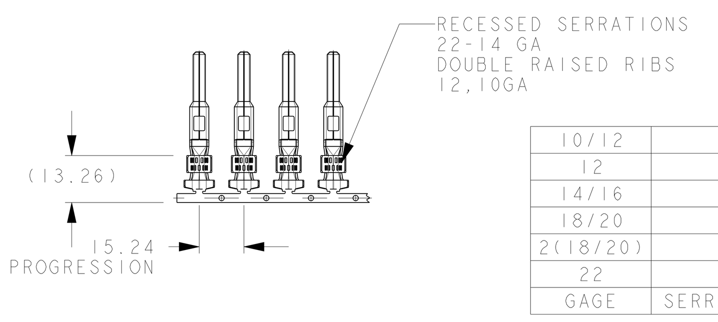

GAGE	SERRATIONS
10/12	2
12	2
14/16	9
18/20	7
2(18/20)	9
22	5

REELING OPTIONS

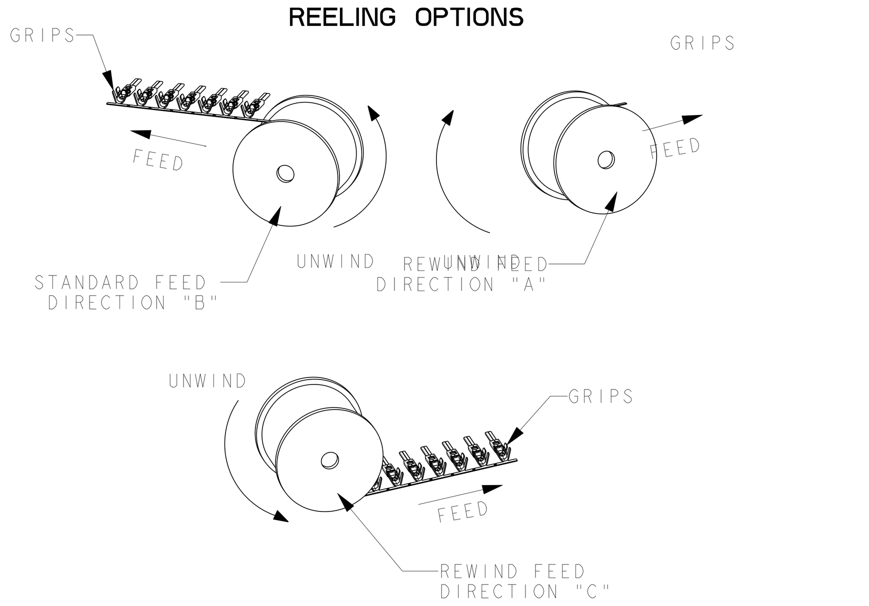

VIEW NOT TO SCALE

TERMINALS TO FEED AS SHOWN AFTER BEING REELED OFF PRODUCTION TOOL.
PACKAGING: PANCAKE REELS WITH PAPER INTERLEAF

NOTE:
1) DO NOT USE MVL PART NUMBERS FOR NEW ORDERS, MVL PART NUMBERS FOR REFERENCE ONLY

2) WHEN USING DELPHI PART NUMBERS, ORDER "DELPHI REWOUND PART NUMBER" (EX: 15512726)

3) IF DELPHI PART NUMBER IS NOT AVAILABLE REQUEST DELPHI PLATED PART NUMBER THEN "REWIND DIRECTION (AorC) (EX: 15520890 REWIND A)

VIEW OF PRECIOUS PLATING NOT TO SCALE

PLATING OPTION # 1

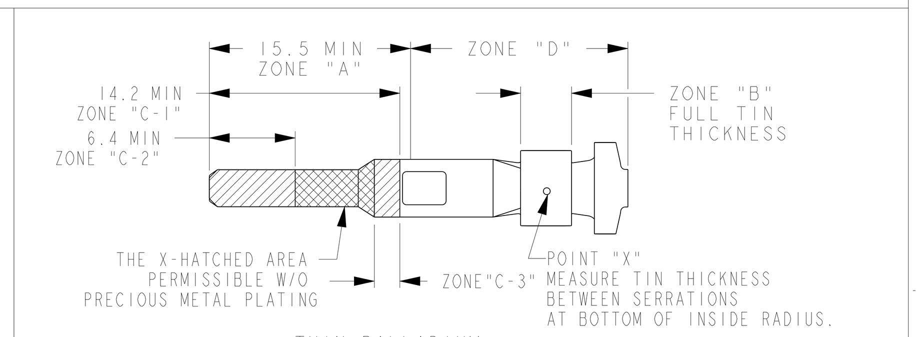

THIN PALLADIUM GOLD FLASH SHORTING BAR

PLATING OPTION #2

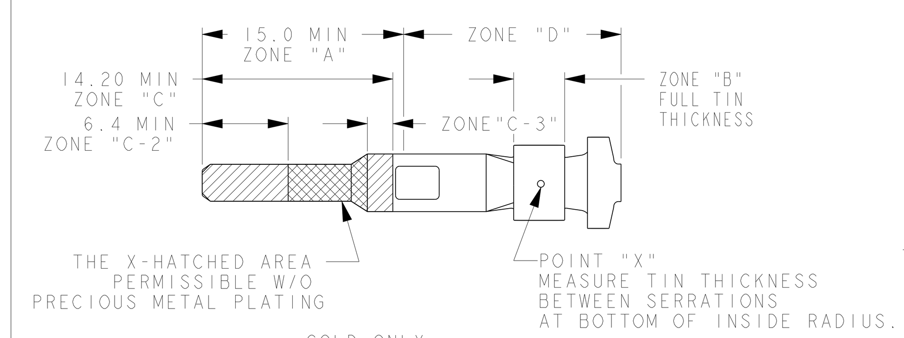

GOLD ONLY SHORTING BAR

PLATING OPTION #3

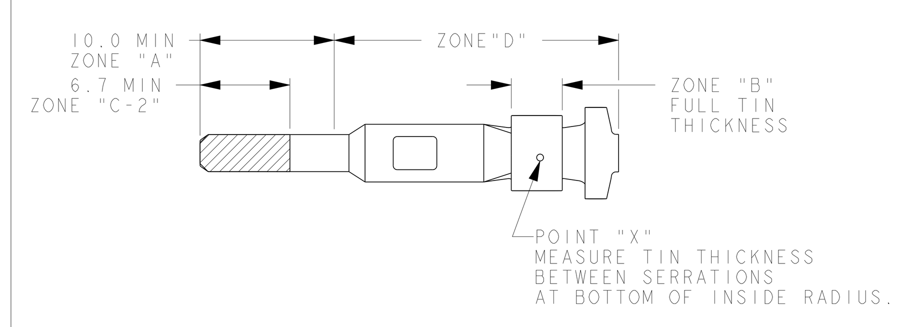

THICK PALLADIUM GOLD FLASH IN-LINE

PLATING OPTION #4

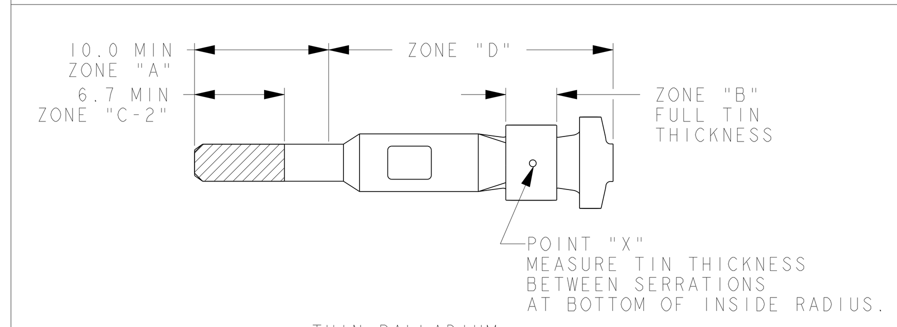

THIN PALLADIUM GOLD FLASH IN-LINE

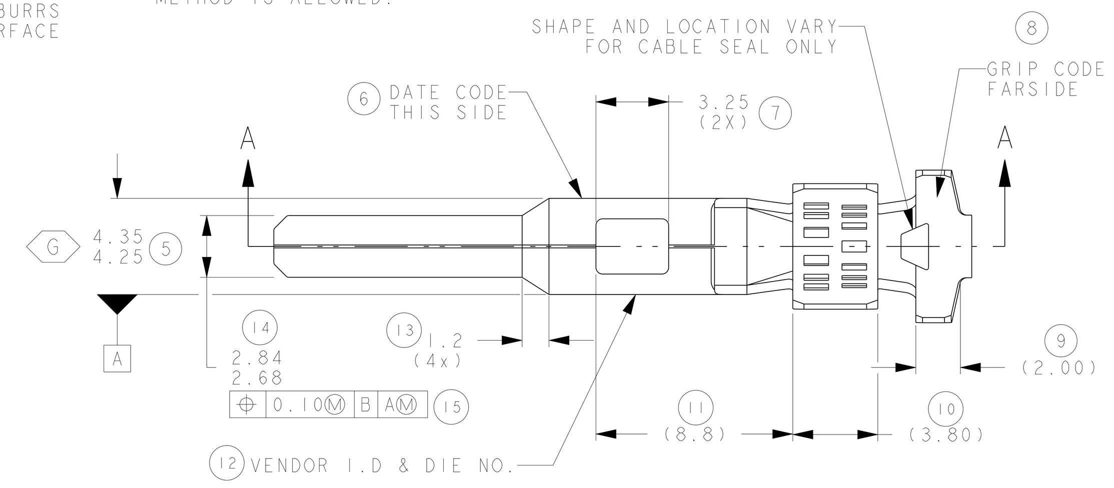

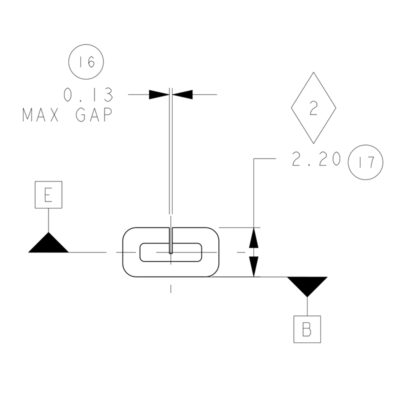

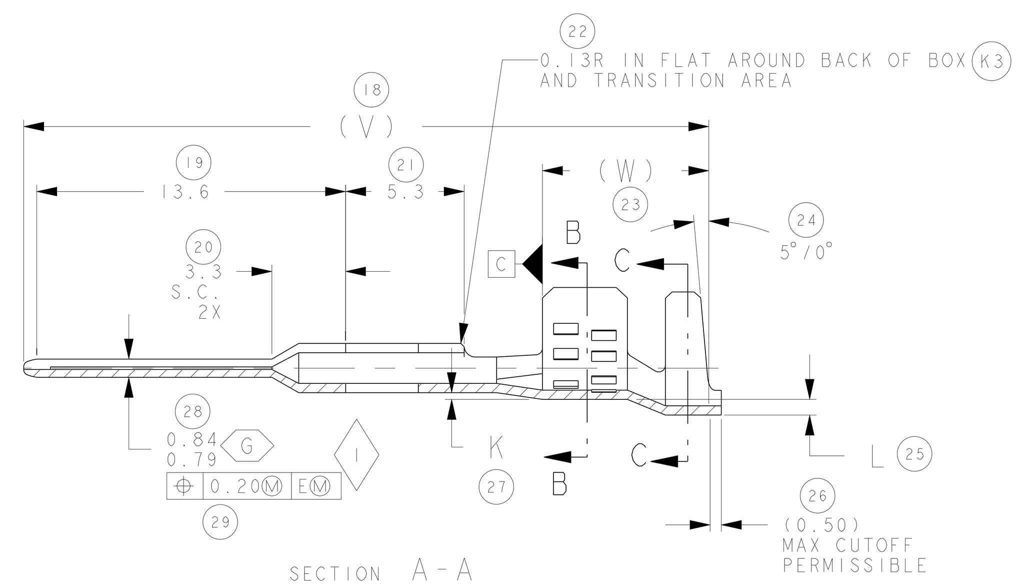

SECTION A-A

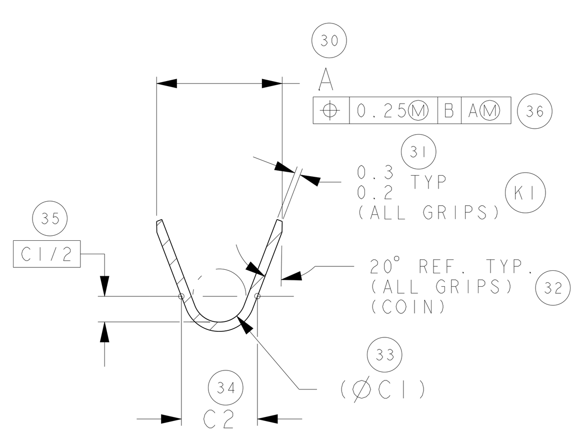

SECTION B-B
CORE GRIP SINGLE WIRE

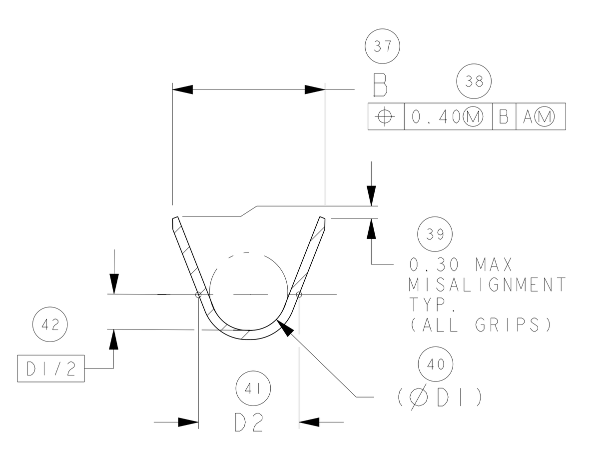

SECTION C-C
INSULATION GRIP SINGLE WIRE

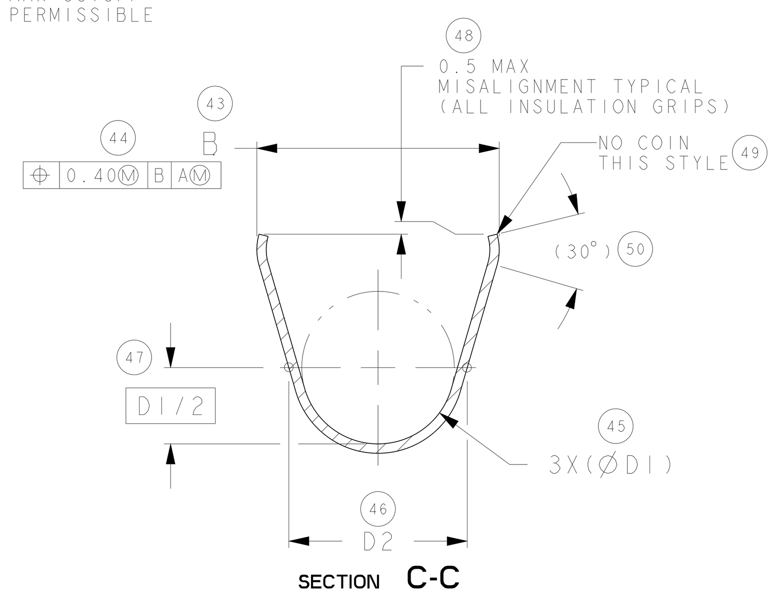

SECTION C-C
INSULATION GRIP CABLE SEAL

MATERIALS:

(51) MATERIAL TYPE 1: COPPER ALLOY PRE PLATED, SEE PLATING CHART FOR INFORMATION

(52) MATERIAL TYPE 2: COPPER ALLOY BARE MATERIAL, POST PLATED, SEE PLATING CHART FOR INFORMATION.

(53) MATERIAL TYPE 3: COPPER ALLOY PRE PLATED, SEE PLATING CHART FOR INFORMATION

NOTES:

1) CONFORMS TO ALL APPLICABLE SECTIONS OF SAE/USCAR-2 REV.3 EXCEPT TERMINAL BEND RESISTANCE SECTION 5.2.2
SAE/USCAR-12 REV 2
SAE/USCAR-21
FORD SDS VER 11

2) TERMINAL SYMMETRICAL ABOUT CENTERLINE EXCEPT AS SHOWN.

3) DIMENSIONAL TOLERANCE:
1 PLACE ±0.25
2 PLACE ±0.10
ANGULAR ±3°

4) FOR CAVITY SPECIFICATION INFORMATION REFERENCE F.C.I. DRAWING 15007 FOR UNSEALED CAVITY AND F.C.I. DRAWING C15006 FOR SEALED CAVITY

5) SEE USCAR DRAWING EWCAP-001 FOR DIRECT CONNECT MATING BLADE INFORMATION

(X) 6) QUALITY ASSURANCE REQUIREMENTS PER USCAR REQUIREMENTS.(2)

(KX) 7) INDICATES IN-PROCESS INSPECTION FOR MANUFACTURING DIMENSIONS OR SPECIFICATIONS. (3)

(G) 8) INDICATES IN-PROCESS GAGE INSPECTION FOR MANUFACTURING DIMENSIONS. (2)

9) ONLY BALLOON DIMENSIONS AND NOTES ARE REQUIRED TO BE MEASURED AT PPAP. ALL OTHER DIMENSIONS AND NOTES WITHOUT BALLOONS SHOULD BE TREATED AS INFORMATIONAL.

10) LAST BALLOON NUMBER: 77

CRIMP NOTES:

1. THE CRIMP AND CRIMP TOOLING DIMENSIONS HAVE BEEN ESTABLISHED AND VALIDATED TO USCAR-21 USING FCI TOOLS, MACHINES, AND PROCESSES. THE DIMENSIONS SHOWN ARE FOR REFERENCE.

2. WIRING SUPPLIERES ARE TO DEVELOP AND VALID THIER CRIMPING SPECIFICATIONS AND PROCESSES ACCORDING TO ALL ASPECTS OF USCAR-21 REV.2. NOTE THAT AS STATED IN USCAR-21, WIRING SUPPLIER DEFINED CRIMPING SPECIFICATIONS AND CRIMPING PROCESSES MAY IMPACT CONNECTOR FUNCTIONS. (SEE USCAR-21 REV.2 4.2.5.1); CONTACT DELPHI ENGINEERING FOR ANY NEEDED ASSISTANCE IN THIS REGARD.

3. DESIGN REFERENCE INFORMATION: IT IS RECOMMENDED THAT THE NOTED NOMINAL OFFSET BETWEEN THE CONDUCTOR GRIP AND INSULATION GRIP NOT BE CHANGED BY THE CRIMPING PROCESS. RESIZING THIS FEATURE DURING CIMPING CAN NEGATIVELY IMPACT CONNECTOR SYSTEM FUNCTION. ACCEPTBILITY OF THE ACTUAL NOTED CRMPED OFFSET, CRIMPING SPECIFICATION, AND CRIMPING PROCESS USED IS TO BE DETERMINED AS DIFINED IN CRIMP NOTE 2.

4. DESIGN FEFERENCE INFORMATION: CRIMPED TERMINALS ARE USED ON VARIOUS CONNECTOR APPLICATIONS. NORMALLY, FOR DESIGN PURPOSES, A CONDUTOR AND INSULATION CRIMP ANGLE TOLERANCE OF +/-3 DEGREES RELATIVE TO TERMINAL DATUM "B" CAN BE ASSUMED. ACTUAL CRIMP TOLERANCES DEFINED WITHIN A HARNESS MAKER´S CRIMPING PROCESS FOR A SPECIFIC CONNECTOR APPLICATION MUST BE VARIFIED AS SUITABLE BY FULL VALIDATION TO ALL ASPECTS OF USCAR-21 INCLUDING SECTION 4.2.5.

ECN-NO.	ZONE	CHANGE DESCRIPTION
13-00039		ECO421054 - DELPHI PART NUMBERS ADDED
-	-	REVISED AND REDRAWN IN PDS.

PRODUCT SPEC. - | PACKAGING SPEC. - | APPLICATION SPEC. -

COPYRIGHT DELPHI CORPORATION AND/OR ITS AFFILIATES. ALL RIGHTS RESERVED. REVISED
THIS DRAWING IS THE PROPERTY OF DELPHI CORPORATION AND CONTAINS DELPHI CONFIDENTIAL INFORMATION. THE REPRODUCTION, DISTRIBUTION AND UTILIZATION OF THIS DOCUMENT OR ITS RELATED CAD MATH DATA, AS WELL AS COMMUNICATION OF ANY CONTENT TO OTHERS, WITHOUT EXPRESS AUTHORIZATION, IS PROHIBITED.

TOLERANCES: SEE NOTES
COUNTERPART Nr.: C15004-CUST
DO NOT MEASURE DRAWING
MATERIAL: -
SURFACE FINISH: -
COLOUR: -
TOOL NO.: D472
ECO Loc. Code: AN

DELPHI
DELPHI PACKARD ELECTRICAL/ELECTRONIC ARCHITECTURE NOVI, MI
3RD ANGLE
DIMENSION IN MILLIMETERS
CAD SYSTEM: pro / eng.
DWG SIZE: A0

	DATE	NAME
CREATED BY	2006-06-26	RAJKUMAR
MODIFIED BY	2013/01/25	Bob CUE
CHECKED BY	2013/01/25	Matt MAJOR
APPROVED BY	2013/01/25	Sucha SIAN

TITLE: BLADE TYPE - MALE
PROJECT: [APEX 2.80MM SYSTEM]
ESR NO. - | CAT. NO. -
DRAWING NUMBER: C15005-CUST | REV.: U
STATE: SERIAL RELEASED
PART NUMBER: See Table | REV.: -
APPROVAL LEVEL: -
SHEET 1 of 1
SCALE 5.000
FILE NAME: C15005-CUST
DOCUMENT UNDER PDS CONTROL NO MODIFICATION ALLOWED OUTSIDE

EUR C04 112 F29 PDS

Компания «ЭлектроПласт» предлагает заключение долгосрочных отношений при поставках импортных электронных компонентов на взаимовыгодных условиях!

Наши преимущества:

- Оперативные поставки широкого спектра электронных компонентов отечественного и импортного производства напрямую от производителей и с крупнейших мировых складов;
- Поставка более 17-ти миллионов наименований электронных компонентов;
- Поставка сложных, дефицитных, либо снятых с производства позиций;
- Оперативные сроки поставки под заказ (от 5 рабочих дней);
- Экспресс доставка в любую точку России;
- Техническая поддержка проекта, помощь в подборе аналогов, поставка прототипов;
- Система менеджмента качества сертифицирована по Международному стандарту ISO 9001;
- Лицензия ФСБ на осуществление работ с использованием сведений, составляющих государственную тайну;
- Поставка специализированных компонентов (Xilinx, Altera, Analog Devices, Intersil, Interpoint, Microsemi, Aeroflex, Peregrine, Syfer, Eurofarad, Texas Instrument, Miteq, Cobham, E2V, MA-COM, Hittite, Mini-Circuits,General Dynamics и др.);

Помимо этого, одним из направлений компании «ЭлектроПласт» является направление «Источники питания». Мы предлагаем Вам помощь Конструкторского отдела:

- Подбор оптимального решения, техническое обоснование при выборе компонента;
- Подбор аналогов;
- Консультации по применению компонента;
- Поставка образцов и прототипов;
- Техническая поддержка проекта;
- Защита от снятия компонента с производства.

Как с нами связаться

Телефон: 8 (812) 309 58 32 (многоканальный)
Факс: 8 (812) 320-02-42
Электронная почта: org@eplast1.ru
Адрес: 198099, г. Санкт-Петербург, ул. Калинина, дом 2, корпус 4, литера А.