165-Bump BGA
Commercial Temp
Industrial Temp

# 2M x 18, 1M x 32, 1M x 36 36Mb Sync Burst SRAMs

400 MHz–150 MHz
2.5 V or 3.3 V $V_{DD}$
2.5 V or 3.3 V I/O

## Features

- $\overline{FT}$ pin for user-configurable flow through or pipeline operation
- Single Cycle Deselect (SCD) operation
- IEEE 1149.1 JTAG-compatible Boundary Scan
- 2.5 V or 3.3 V +10%/–10% core power supply
- 2.5 V or 3.3 V I/O supply
- $\overline{LBO}$ pin for Linear or Interleaved Burst mode
- Internal input resistors on mode pins allow floating mode pins
- Byte Write ($\overline{BW}$) and/or Global Write ($\overline{GW}$) operation
- Internal self-timed write cycle
- Automatic power-down for portable applications
- JEDEC-standard 165-bump BGA package
- RoHS-compliant 165-bump BGA package available

## Functional Description

### Applications

The GS832118/32/36AD is a 37,748,736-bit high performance synchronous SRAM with a 2-bit burst address counter. Although of a type originally developed for Level 2 Cache applications supporting high performance CPUs, the device now finds application in synchronous SRAM applications, ranging from DSP main store to networking chip set support.

### Controls

Addresses, data I/Os, chip enable ($\overline{E1}$), address burst control inputs ($\overline{ADSP}$, $\overline{ADSC}$, $\overline{ADV}$) and write control inputs ($\overline{Bx}$, $\overline{BW}$, $\overline{GW}$) are synchronous and are controlled by a positive-edge-triggered clock input (CK). Output enable ($\overline{G}$) and power down control (ZZ) are asynchronous inputs. Burst cycles can be initiated with either $\overline{ADSP}$ or $\overline{ADSC}$ inputs. In Burst mode, subsequent burst addresses are generated internally and are controlled by $\overline{ADV}$. The burst address counter may be configured to count in either linear or interleave order with the Linear Burst Order ($\overline{LBO}$) input. The Burst function need not be used. New addresses can be loaded on every cycle with no degradation of chip performance.

### Flow Through/Pipeline Reads

The function of the Data Output register can be controlled by the user via the $\overline{FT}$ mode pin (Pin 14). Holding the $\overline{FT}$ mode pin low places the RAM in Flow Through mode, causing output data to bypass the Data Output Register. Holding $\overline{FT}$ high places the RAM in Pipeline mode, activating the rising-edge-triggered Data Output Register.

### SCD Pipelined Reads

The GS832118/32/36AD is a SCD (Single Cycle Deselect) pipelined synchronous SRAM. DCD (Dual Cycle Deselect) versions are also available. SCD SRAMs pipeline deselect commands one stage less than read commands. SCD RAMs begin turning off their outputs immediately after the deselect command has been captured in the input registers.

### Byte Write and Global Write

Byte write operation is performed by using Byte Write enable ($\overline{BW}$) input combined with one or more individual byte write signals ($\overline{Bx}$). In addition, Global Write ($\overline{GW}$) is available for writing all bytes at one time, regardless of the Byte Write control inputs.

### Sleep Mode

Low power (Sleep mode) is attained through the assertion (High) of the ZZ signal, or by stopping the clock (CK). Memory data is retained during Sleep mode.

### Core and Interface Voltages

The GS832118/32/36AD operates on a 3.3 V or 2.5 V power supply. All input are 3.3 V and 2.5 V compatible. Separate output power ($V_{DDQ}$) pins are used to decouple output noise from the internal circuits and are 3.3 V and 2.5 V compatible.

## Parameter Synopsis

| | | -400 | -375 | -333 | -250 | -200 | -150 | Unit |
|---|---|---|---|---|---|---|---|---|
| Pipeline 3-1-1-1 | $t_{KQ}$ | 2.5 | 2.5 | 2.5 | 2.5 | 3.0 | 3.8 | ns |
| | tCycle | 2.5 | 2.66 | 3.3 | 4.0 | 5.0 | 6.7 | ns |
| | Curr (x18) | 395 | 390 | 355 | 280 | 240 | 205 | mA |
| | Curr (x32/x36) | 475 | 455 | 415 | 335 | 280 | 230 | mA |
| Flow Through 2-1-1-1 | $t_{KQ}$ | 4.0 | 4.2 | 4.5 | 5.5 | 6.5 | 7.5 | ns |
| | tCycle | 4.0 | 4.2 | 4.5 | 5.5 | 6.5 | 7.5 | ns |
| | Curr (x18) | 290 | 275 | 260 | 235 | 200 | 190 | mA |
| | Curr (x32/x36) | 335 | 320 | 305 | 270 | 240 | 220 | mA |

 © 2011, GSI Technology

Specifications cited are subject to change without notice. For latest documentation see http://www.gsitechnology.com.

165 Bump BGA—x18 Common I/O—Top View (Package D)

| | 1 | 2 | 3 | 4 | 5 | 6 | 7 | 8 | 9 | 10 | 11 | |
|---|---|---|---|---|---|---|---|---|---|---|---|---|
| A | NC | A | $\overline{E1}$ | $\overline{BB}$ | NC | $\overline{E3}$ | $\overline{BW}$ | $\overline{ADSC}$ | $\overline{ADV}$ | A | A | A |
| B | NC | A | E2 | NC | $\overline{BA}$ | CK | $\overline{GW}$ | $\overline{G}$ | $\overline{ADSP}$ | A | NC | B |
| C | NC | NC | $V_{DDQ}$ | $V_{SS}$ | $V_{SS}$ | $V_{SS}$ | $V_{SS}$ | $V_{SS}$ | $V_{DDQ}$ | NC | DQPA | C |
| D | NC | DQB | $V_{DDQ}$ | $V_{DD}$ | $V_{SS}$ | $V_{SS}$ | $V_{SS}$ | $V_{DD}$ | $V_{DDQ}$ | NC | DQA | D |
| E | NC | DQB | $V_{DDQ}$ | $V_{DD}$ | $V_{SS}$ | $V_{SS}$ | $V_{SS}$ | $V_{DD}$ | $V_{DDQ}$ | NC | DQA | E |
| F | NC | DQB | $V_{DDQ}$ | $V_{DD}$ | $V_{SS}$ | $V_{SS}$ | $V_{SS}$ | $V_{DD}$ | $V_{DDQ}$ | NC | DQA | F |
| G | NC | DQB | $V_{DDQ}$ | $V_{DD}$ | $V_{SS}$ | $V_{SS}$ | $V_{SS}$ | $V_{DD}$ | $V_{DDQ}$ | NC | DQA | G |
| H | $\overline{FT}$ | MCL | NC | $V_{DD}$ | $V_{SS}$ | $V_{SS}$ | $V_{SS}$ | $V_{DD}$ | NC | NC | ZZ | H |
| J | DQB | NC | $V_{DDQ}$ | $V_{DD}$ | $V_{SS}$ | $V_{SS}$ | $V_{SS}$ | $V_{DD}$ | $V_{DDQ}$ | DQA | NC | J |
| K | DQB | NC | $V_{DDQ}$ | $V_{DD}$ | $V_{SS}$ | $V_{SS}$ | $V_{SS}$ | $V_{DD}$ | $V_{DDQ}$ | DQA | NC | K |
| L | DQB | NC | $V_{DDQ}$ | $V_{DD}$ | $V_{SS}$ | $V_{SS}$ | $V_{SS}$ | $V_{DD}$ | $V_{DDQ}$ | DQA | NC | L |
| M | DQB | NC | $V_{DDQ}$ | $V_{DD}$ | $V_{SS}$ | $V_{SS}$ | $V_{SS}$ | $V_{DD}$ | $V_{DDQ}$ | DQA | NC | M |
| N | DQPB | NC | $V_{DDQ}$ | $V_{SS}$ | NC | A | NC | $V_{SS}$ | $V_{DDQ}$ | NC | NC | N |
| P | NC | NC | A | A | TDI | A1 | TDO | A | A | A | A | P |
| R | $\overline{LBO}$ | A19 | A | A | TMS | A0 | TCK | A | A | A | A | R |

11 x 15 Bump BGA—13 mm x 15 mm Body—1.0 mm Bump Pitch

 © 2011, GSI Technology

Specifications cited are subject to change without notice. For latest documentation see http://www.gsitechnology.com.

165 Bump BGA—x32 Common I/O—Top View (Package D)

| | 1 | 2 | 3 | 4 | 5 | 6 | 7 | 8 | 9 | 10 | 11 | |
|---|---|---|---|---|---|---|---|---|---|---|---|---|
| A | NC | A | $\overline{E1}$ | $\overline{BC}$ | $\overline{BB}$ | $\overline{E3}$ | $\overline{BW}$ | $\overline{ADSC}$ | $\overline{ADV}$ | A | NC | A |
| B | NC | A | E2 | $\overline{BD}$ | $\overline{BA}$ | CK | $\overline{GW}$ | $\overline{G}$ | $\overline{ADSP}$ | A | NC | B |
| C | NC | NC | $V_{DDQ}$ | $V_{SS}$ | $V_{SS}$ | $V_{SS}$ | $V_{SS}$ | $V_{SS}$ | $V_{DDQ}$ | NC | NC | C |
| D | DQC | DQC | $V_{DDQ}$ | $V_{DD}$ | $V_{SS}$ | $V_{SS}$ | $V_{SS}$ | $V_{DD}$ | $V_{DDQ}$ | DQB | DQB | D |
| E | DQC | DQC | $V_{DDQ}$ | $V_{DD}$ | $V_{SS}$ | $V_{SS}$ | $V_{SS}$ | $V_{DD}$ | $V_{DDQ}$ | DQB | DQB | E |
| F | DQC | DQC | $V_{DDQ}$ | $V_{DD}$ | $V_{SS}$ | $V_{SS}$ | $V_{SS}$ | $V_{DD}$ | $V_{DDQ}$ | DQB | DQB | F |
| G | DQC | DQC | $V_{DDQ}$ | $V_{DD}$ | $V_{SS}$ | $V_{SS}$ | $V_{SS}$ | $V_{DD}$ | $V_{DDQ}$ | DQB | DQB | G |
| H | $\overline{FT}$ | MCL | NC | $V_{DD}$ | $V_{SS}$ | $V_{SS}$ | $V_{SS}$ | $V_{DD}$ | NC | NC | ZZ | H |
| J | DQD | DQD | $V_{DDQ}$ | $V_{DD}$ | $V_{SS}$ | $V_{SS}$ | $V_{SS}$ | $V_{DD}$ | $V_{DDQ}$ | DQA | DQA | J |
| K | DQD | DQD | $V_{DDQ}$ | $V_{DD}$ | $V_{SS}$ | $V_{SS}$ | $V_{SS}$ | $V_{DD}$ | $V_{DDQ}$ | DQA | DQA | K |
| L | DQD | DQD | $V_{DDQ}$ | $V_{DD}$ | $V_{SS}$ | $V_{SS}$ | $V_{SS}$ | $V_{DD}$ | $V_{DDQ}$ | DQA | DQA | L |
| M | DQD | DQD | $V_{DDQ}$ | $V_{DD}$ | $V_{SS}$ | $V_{SS}$ | $V_{SS}$ | $V_{DD}$ | $V_{DDQ}$ | DQA | DQA | M |
| N | NC | NC | $V_{DDQ}$ | $V_{SS}$ | NC | A | NC | $V_{SS}$ | $V_{DDQ}$ | NC | NC | N |
| P | NC | NC | A | A | TDI | A1 | TDO | A | A | A | A | P |
| R | $\overline{LBO}$ | A | A | A | TMS | A0 | TCK | A | A | A | A | R |

11 x 15 Bump BGA—13 mm x 15 mm Body—1.0 mm Bump Pitch

 © 2011, GSI Technology

Specifications cited are subject to change without notice. For latest documentation see http://www.gsitechnology.com.

165 Bump BGA—x36 Common I/O—Top View (Package D)

| | 1 | 2 | 3 | 4 | 5 | 6 | 7 | 8 | 9 | 10 | 11 | |
|---|---|---|---|---|---|---|---|---|---|---|---|---|
| A | NC | A | $\overline{E1}$ | $\overline{BC}$ | $\overline{BB}$ | $\overline{E3}$ | $\overline{BW}$ | $\overline{ADSC}$ | $\overline{ADV}$ | A | NC | A |
| B | NC | A | E2 | $\overline{BD}$ | $\overline{BA}$ | CK | $\overline{GW}$ | $\overline{G}$ | $\overline{ADSP}$ | A | NC | B |
| C | DQPC | NC | $V_{DDQ}$ | $V_{SS}$ | $V_{SS}$ | $V_{SS}$ | $V_{SS}$ | $V_{SS}$ | $V_{DDQ}$ | NC | DQPB | C |
| D | DQC | DQC | $V_{DDQ}$ | $V_{DD}$ | $V_{SS}$ | $V_{SS}$ | $V_{SS}$ | $V_{DD}$ | $V_{DDQ}$ | DQB | DQB | D |
| E | DQC | DQC | $V_{DDQ}$ | $V_{DD}$ | $V_{SS}$ | $V_{SS}$ | $V_{SS}$ | $V_{DD}$ | $V_{DDQ}$ | DQB | DQB | E |
| F | DQC | DQC | $V_{DDQ}$ | $V_{DD}$ | $V_{SS}$ | $V_{SS}$ | $V_{SS}$ | $V_{DD}$ | $V_{DDQ}$ | DQB | DQB | F |
| G | DQC | DQC | $V_{DDQ}$ | $V_{DD}$ | $V_{SS}$ | $V_{SS}$ | $V_{SS}$ | $V_{DD}$ | $V_{DDQ}$ | DQB | DQB | G |
| H | $\overline{FT}$ | MCL | NC | $V_{DD}$ | $V_{SS}$ | $V_{SS}$ | $V_{SS}$ | $V_{DD}$ | NC | NC | ZZ | H |
| J | DQD | DQD | $V_{DDQ}$ | $V_{DD}$ | $V_{SS}$ | $V_{SS}$ | $V_{SS}$ | $V_{DD}$ | $V_{DDQ}$ | DQA | DQA | J |
| K | DQD | DQD | $V_{DDQ}$ | $V_{DD}$ | $V_{SS}$ | $V_{SS}$ | $V_{SS}$ | $V_{DD}$ | $V_{DDQ}$ | DQA | DQA | K |
| L | DQD | DQD | $V_{DDQ}$ | $V_{DD}$ | $V_{SS}$ | $V_{SS}$ | $V_{SS}$ | $V_{DD}$ | $V_{DDQ}$ | DQA | DQA | L |
| M | DQD | DQD | $V_{DDQ}$ | $V_{DD}$ | $V_{SS}$ | $V_{SS}$ | $V_{SS}$ | $V_{DD}$ | $V_{DDQ}$ | DQA | DQA | M |
| N | DQPD | NC | $V_{DDQ}$ | $V_{SS}$ | NC | A | NC | $V_{SS}$ | $V_{DDQ}$ | NC | DQPA | N |
| P | NC | NC | A | A | TDI | A1 | TDO | A | A | A | A | P |
| R | $\overline{LBO}$ | A | A | A | TMS | A0 | TCK | A | A | A | A | R |

11 x 15 Bump BGA—13 mm x 15 mm Body—1.0 mm Bump Pitch

 © 2011, GSI Technology

Specifications cited are subject to change without notice. For latest documentation see http://www.gsitechnology.com.

## GS832118/32/36AD 165-Bump BGA Pin Description

| Symbol | Type | Description |
|---|---|---|
| $A_0$, $A_1$ | I | Address field LSBs and Address Counter Preset Inputs |
| A | I | Address Inputs |
| $DQ_A$<br>$DQ_B$<br>$DQ_C$<br>$DQ_D$ | I/O | Data Input and Output pins |
| $\overline{B}_A$, $\overline{B}_B$, $\overline{B}_C$, $\overline{B}_D$ | I | Byte Write Enable for $DQ_A$, $DQ_B$, $DQ_C$, $DQ_D$ I/Os; active low |
| CK | I | Clock Input Signal; active high |
| $\overline{BW}$ | I | Byte Write—Writes all enabled bytes; active low |
| $\overline{GW}$ | I | Global Write Enable—Writes all bytes; active low |
| $\overline{E}_1$ | I | Chip Enable; active low |
| $\overline{E}_3$ | I | Chip Enable; active low |
| $E_2$ | I | Chip Enable; active high |
| $\overline{G}$ | I | Output Enable; active low |
| $\overline{ADV}$ | I | Burst address counter advance enable; active l0w |
| $\overline{ADSC}$, $\overline{ADSP}$ | I | Address Strobe (Processor, Cache Controller); active low |
| ZZ | I | Sleep mode control; active high |
| $\overline{FT}$ | I | Flow Through or Pipeline mode; active low |
| $\overline{LBO}$ | I | Linear Burst Order mode; active low |
| TMS | I | Scan Test Mode Select |
| TDI | I | Scan Test Data In |
| TDO | O | Scan Test Data Out |
| TCK | I | Scan Test Clock |
| MCL | — | Must Connect Low |
| $V_{DD}$ | I | Core power supply |
| $V_{SS}$ | I | I/O and Core Ground |
| $V_{DDQ}$ | I | Output driver power supply |
| NC | — | No Connect |

 © 2011, GSI Technology

Specifications cited are subject to change without notice. For latest documentation see http://www.gsitechnology.com.

## GS832118/32/36A Block Diagram

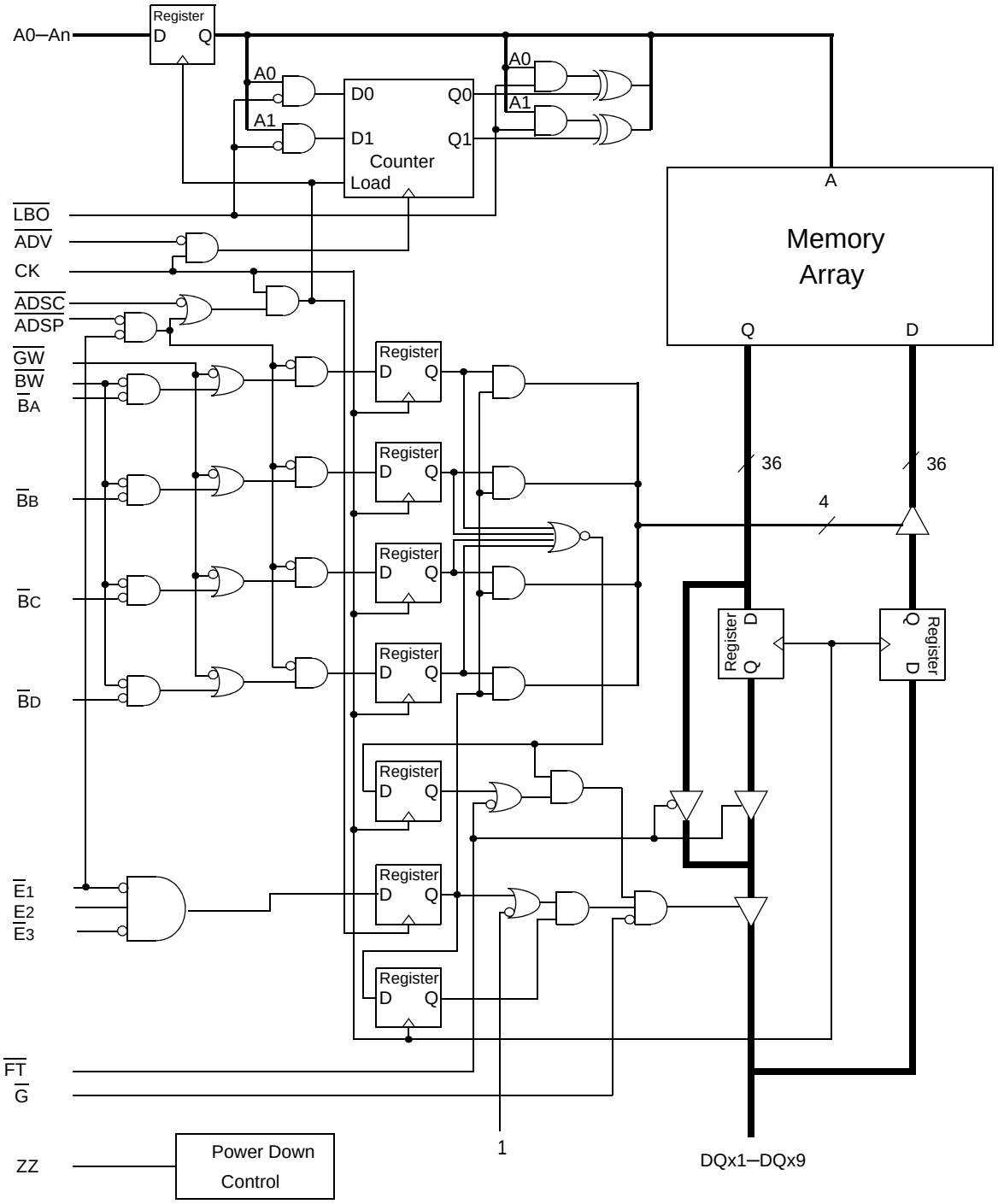


Note: Only x36 version shown for simplicity.

 © 2011, GSI Technology

Specifications cited are subject to change without notice. For latest documentation see http://www.gsitechnology.com.

## Mode Pin Functions

| Mode Name | Pin Name | State | Function |
|---|---|---|---|
| Burst Order Control | $\overline{LBO}$ | L | Linear Burst |
| | | H | Interleaved Burst |
| Output Register Control | $\overline{FT}$ | L | Flow Through |
| | | H or NC | Pipeline |
| Power Down Control | ZZ | L or NC | Active |
| | | H | Standby, $I_{DD} = I_{SB}$ |

Note:
There is a pull-up device on the $\overline{FT}$ pin and a pull-down device on the ZZ pin , so this input pin can be unconnected and the chip will operate in the default states as specified in the above tables.

Burst Counter Sequences

## Linear Burst Sequence

| | A[1:0] | A[1:0] | A[1:0] | A[1:0] |
|---|---|---|---|---|
| 1st address | 00 | 01 | 10 | 11 |
| 2nd address | 01 | 10 | 11 | 00 |
| 3rd address | 10 | 11 | 00 | 01 |
| 4th address | 11 | 00 | 01 | 10 |

Note:
The burst counter wraps to initial state on the 5th clock.

## Interleaved Burst Sequence

| | A[1:0] | A[1:0] | A[1:0] | A[1:0] |
|---|---|---|---|---|
| 1st address | 00 | 01 | 10 | 11 |
| 2nd address | 01 | 00 | 11 | 10 |
| 3rd address | 10 | 11 | 00 | 01 |
| 4th address | 11 | 10 | 01 | 00 |

Note:
The burst counter wraps to initial state on the 5th clock.

 © 2011, GSI Technology
Specifications cited are subject to change without notice. For latest documentation see http://www.gsitechnology.com.

## Byte Write Truth Table

| Function | $\overline{GW}$ | $\overline{BW}$ | $\overline{B}_A$ | $\overline{B}_B$ | $\overline{B}_C$ | $\overline{B}_D$ | Notes |
|---|---|---|---|---|---|---|---|
| Read | H | H | X | X | X | X | 1 |
| Write No Bytes | H | L | H | H | H | H | 1 |
| Write byte a | H | L | L | H | H | H | 2, 3 |
| Write byte b | H | L | H | L | H | H | 2, 3 |
| Write byte c | H | L | H | H | L | H | 2, 3, 4 |
| Write byte d | H | L | H | H | H | L | 2, 3, 4 |
| Write all bytes | H | L | L | L | L | L | 2, 3, 4 |
| Write all bytes | L | X | X | X | X | X | |

Notes:

1. All byte outputs are active in read cycles regardless of the state of Byte Write Enable inputs, $\overline{B}_A$, $\overline{B}_B$, $\overline{B}_C$ and/or $\overline{B}_D$.
2. Byte Write Enable inputs $\overline{B}_A$, $\overline{B}_B$, $\overline{B}_C$ and/or $\overline{B}_D$ may be used in any combination with $\overline{BW}$ to write single or multiple bytes.
3. All byte I/Os remain High-Z during all write operations regardless of the state of Byte Write Enable inputs.
4. Bytes "C" and "D" are only available on the x32 and x36 versions.

 © 2011, GSI Technology

Specifications cited are subject to change without notice. For latest documentation see http://www.gsitechnology.com.

## Synchronous Truth Table

| Operation | Address Used | State Diagram Key | $\overline{E}_1$ | $E_2$ | $\overline{E}_3$ | $\overline{ADSP}$ | $\overline{ADSC}$ | $\overline{ADV}$ | $\overline{W}$ | DQ[3] |
|---|---|---|---|---|---|---|---|---|---|---|
| Deselect Cycle, Power Down | None | X | L | X | H | X | L | X | X | High-Z |
| Deselect Cycle, Power Down | None | X | L | L | X | X | L | X | X | High-Z |
| Deselect Cycle, Power Down | None | X | L | X | H | L | X | X | X | High-Z |
| Deselect Cycle, Power Down | None | X | L | L | X | L | X | X | X | High-Z |
| Deselect Cycle, Power Down | None | X | H | X | X | X | L | X | X | High-Z |
| Read Cycle, Begin Burst | External | R | L | H | L | L | X | X | X | Q |
| Read Cycle, Begin Burst | External | R | L | H | L | H | L | X | F | Q |
| Write Cycle, Begin Burst | External | W | L | H | L | H | L | X | T | D |
| *Read Cycle, Continue Burst* | *Next* | *CR* | *X* | *X* | *X* | *H* | *H* | *L* | *F* | *Q* |
| Read Cycle, Continue Burst | Next | CR | H | X | X | X | H | L | F | Q |
| *Write Cycle, Continue Burst* | *Next* | *CW* | *X* | *X* | *X* | *H* | *H* | *L* | *T* | *D* |
| Write Cycle, Continue Burst | Next | CW | H | X | X | X | H | L | T | D |
| Read Cycle, Suspend Burst | Current | | X | X | X | H | H | H | F | Q |
| Read Cycle, Suspend Burst | Current | | H | X | X | X | H | H | F | Q |
| Write Cycle, Suspend Burst | Current | | X | X | X | H | H | H | T | D |
| Write Cycle, Suspend Burst | Current | | H | X | X | X | H | H | T | D |

Notes:

1. X = Don't Care, H = High, L = Low
2. E = T (True) if $E_2$ = 1 and $\overline{E}_1$ = $\overline{E}_3$ = 0; E = F (False) if $E_2$ = 0 or $\overline{E}_1$ = 1 or $\overline{E}_3$ = 1
3. W = T (True) and F (False) is defined in the Byte Write Truth Table preceding.
4. $\overline{G}$ is an asynchronous input. $\overline{G}$ can be driven high at any time to disable active output drivers. $\overline{G}$ low can only enable active drivers (shown as "Q" in the Truth Table above).
5. All input combinations shown above are tested and supported. Input combinations shown in gray boxes need not be used to accomplish basic synchronous or synchronous burst operations and may be avoided for simplicity.
6. Tying $\overline{ADSP}$ high and $\overline{ADSC}$ low allows simple non-burst synchronous operations. See **BOLD** items above.
7. Tying $\overline{ADSP}$ high and $\overline{ADV}$ low while using $\overline{ADSC}$ to load new addresses allows simple burst operations. See *ITALIC* items above.

 © 2011, GSI Technology

Specifications cited are subject to change without notice. For latest documentation see http://www.gsitechnology.com.

## Simplified State Diagram

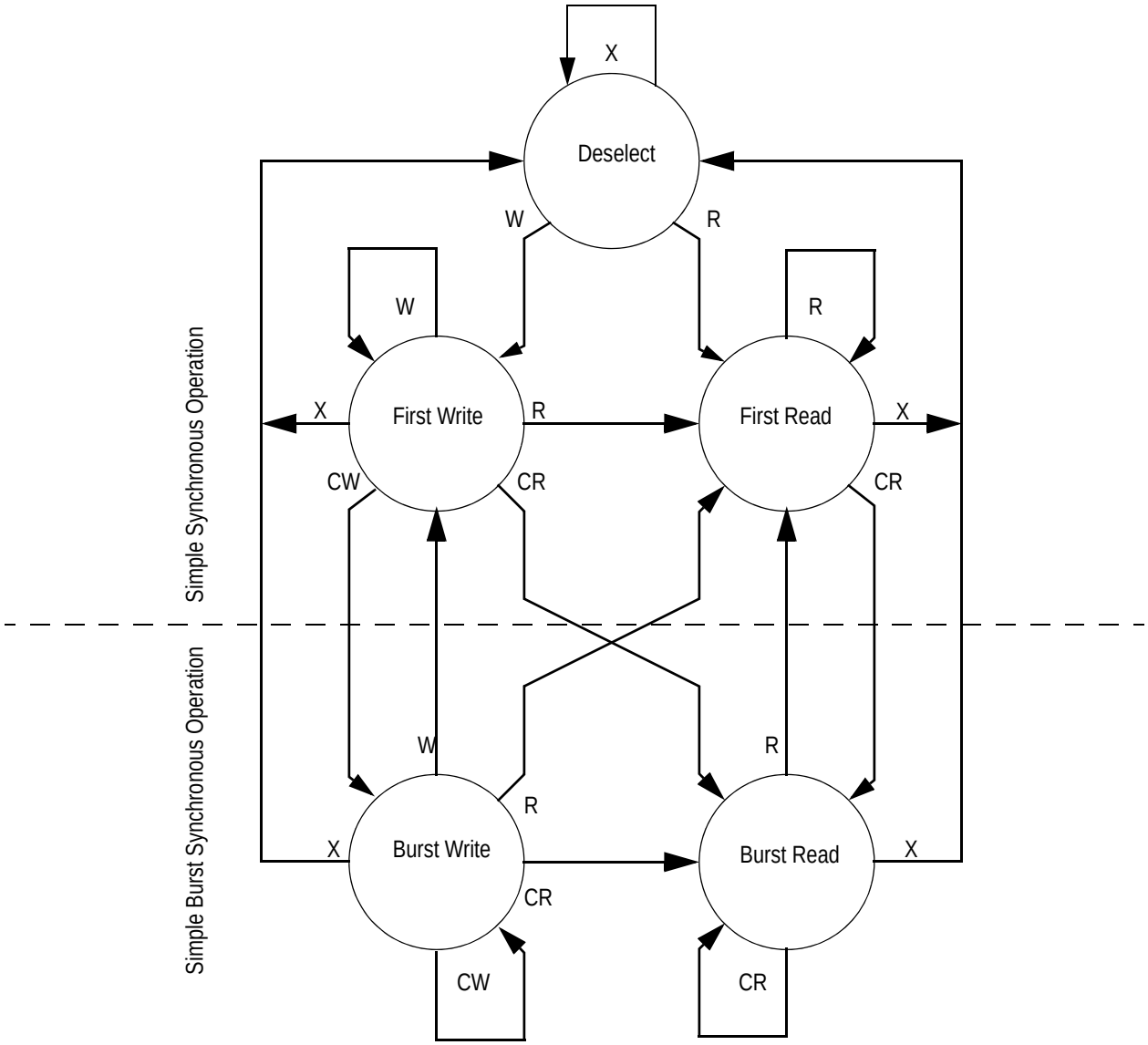


Notes:

1. The diagram shows only supported (tested) synchronous state transitions. The diagram presumes $\overline{G}$ is tied low.
2. The upper portion of the diagram assumes active use of only the Enable ($\overline{E1}$) and Write ($\overline{B_A}$, $\overline{B_B}$, $\overline{B_C}$, $\overline{B_D}$, $\overline{BW}$, and $\overline{GW}$) control inputs, and that $\overline{ADSP}$ is tied high and $\overline{ADSC}$ is tied low.
3. The upper and lower portions of the diagram together assume active use of only the Enable, Write, and $\overline{ADSC}$ control inputs, and assumes $\overline{ADSP}$ is tied high and $\overline{ADV}$ is tied low.

 © 2011, GSI Technology

Specifications cited are subject to change without notice. For latest documentation see http://www.gsitechnology.com.

## Simplified State Diagram with $\overline{G}$

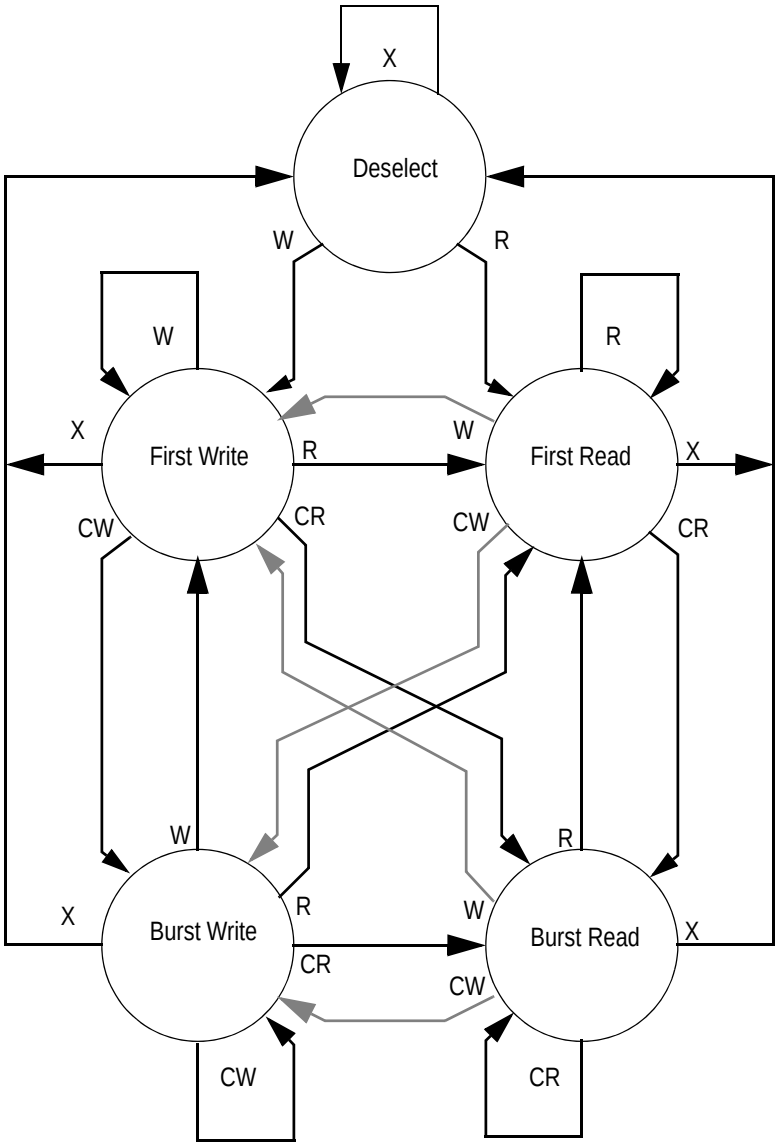


Notes:

1. The diagram shows supported (tested) synchronous state transitions plus supported transitions that depend upon the use of $\overline{G}$.
2. Use of "Dummy Reads" (Read Cycles with $\overline{G}$ High) may be used to make the transition from read cycles to write cycles without passing through a deselect cycle. Dummy read cycles increment the address counter just like normal read cycles.
3. Transitions shown in gray tone assume $\overline{G}$ has been pulsed high long enough to turn the RAM's drivers off and for incoming data to meet Data Input Set Up Time.

 © 2011, GSI Technology

Specifications cited are subject to change without notice. For latest documentation see http://www.gsitechnology.com.

## Absolute Maximum Ratings

(All voltages reference to $V_{SS}$)

| Symbol | Description | Value | Unit |
|---|---|---|---|
| $V_{DD}$ | Voltage on $V_{DD}$ Pins | –0.5 to 4.6 | V |
| $V_{DDQ}$ | Voltage in $V_{DDQ}$ Pins | –0.5 to $V_{DD}$ | V |
| $V_{I/O}$ | Voltage on I/O Pins | –0.5 to $V_{DD}$ +0.5 (≤ 4.6 V max.) | V |
| $V_{IN}$ | Voltage on Other Input Pins | –0.5 to $V_{DD}$ +0.5 (≤ 4.6 V max.) | V |
| $I_{IN}$ | Input Current on Any Pin | +/–20 | mA |
| $I_{OUT}$ | Output Current on Any I/O Pin | +/–20 | mA |
| $P_D$ | Package Power Dissipation | 1.5 | W |
| $T_{STG}$ | Storage Temperature | –55 to 125 | $^oC$ |
| $T_{BIAS}$ | Temperature Under Bias | –55 to 125 | $^oC$ |

Note:

Permanent damage to the device may occur if the Absolute Maximum Ratings are exceeded. Operation should be restricted to Recommended Operating Conditions. Exposure to conditions exceeding the Absolute Maximum Ratings, for an extended period of time, may affect reliability of this component.

## Power Supply Voltage Ranges

| Parameter | Symbol | Min. | Typ. | Max. | Unit |
|---|---|---|---|---|---|
| 3.3 V Supply Voltage | $V_{DD3}$ | 3.0 | 3.3 | 3.6 | V |
| 2.5 V Supply Voltage | $V_{DD2}$ | 2.3 | 2.5 | 2.7 | V |
| 3.3 V $V_{DDQ}$ I/O Supply Voltage | $V_{DDQ3}$ | 3.0 | 3.3 | 3.6 | V |
| 2.5 V $V_{DDQ}$ I/O Supply Voltage | $V_{DDQ2}$ | 2.3 | 2.5 | 2.7 | V |

## $V_{DD3}$ Range Logic Levels

| Parameter | Symbol | Min. | Typ. | Max. | Unit |
|---|---|---|---|---|---|
| Input High Voltage | $V_{IH}$ | 2.0 | — | $V_{DD}$ + 0.3 | V |
| Input Low Voltage | $V_{IL}$ | –0.3 | — | 0.8 | V |

Notes:

1. $V_{IH}$ (max) must be met for any instantaneous value of $V_{DD}$.
2. $V_{DD}$ needs to power-up before or at the same time as $V_{DDQ}$ to make sure $V_{IH}$ (max) is not exceeded.

 © 2011, GSI Technology

Specifications cited are subject to change without notice. For latest documentation see http://www.gsitechnology.com.

## $V_{DD2}$ Range Logic Levels

| Parameter | Symbol | Min. | Typ. | Max. | Unit |
|---|---|---|---|---|---|
| Input High Voltage | $V_{IH}$ | $0.6*V_{DD}$ | — | $V_{DD}$ + 0.3 | V |
| Input Low Voltage | $V_{IL}$ | –0.3 | — | $0.3*V_{DD}$ | V |

Notes:
1. $V_{IH}$ (max) must be met for any instantaneous value of $V_{DD}$.
2. $V_{DD}$ needs to power-up before or at the same time as $V_{DDQ}$ to make sure $V_{IH}$ (max) is not exceeded.

## Operating Temperature

| Parameter | Symbol | Min. | Typ. | Max. | Unit |
|---|---|---|---|---|---|
| Junction Temperature (Commercial Range Versions) | $T_J$ | 0 | 25 | 85 | °C |
| Junction Temperature (Industrial Range Versions)* | $T_J$ | –40 | 25 | 100 | °C |

Note:
* The part numbers of Industrial Temperature Range versions end with the character "I". Unless otherwise noted, all performance specifications quoted are evaluated for worst case in the temperature range marked on the device.

## Thermal Impedance

| Package | Test PCB Substrate | θ JA (C°/W) Airflow = 0 m/s | θ JA (C°/W) Airflow = 1 m/s | θ JA (C°/W) Airflow = 2 m/s | θ JB (C°/W) | θ JC (C°/W) |
|---|---|---|---|---|---|---|
| 165 BGA | 4-layer | 24.4 | 21.0 | 20.0 | 11.6 | 3.7 |

Notes:
1. Thermal Impedance data is based on a number of of samples from mulitple lots and should be viewed as a typical number.
2. Please refer to JEDEC standard JESD51-6.
3. The characteristics of the test fixture PCB influence reported thermal characteristics of the device. Be advised that a good thermal path to the PCB can result in cooling or heating of the RAM depending on PCB temperature.

## Undershoot Measurement and Timing

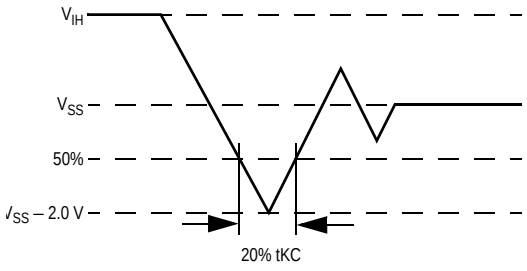


## Overshoot Measurement and Timing

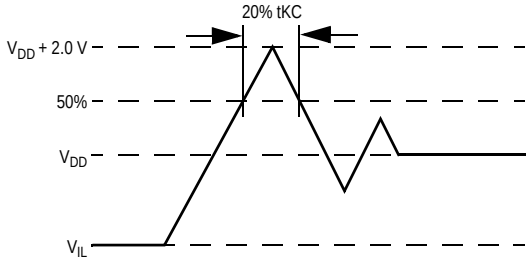


Note:
Input Under/overshoot voltage must be –2 V > Vi < $V_{DDn}$+2 V not to exceed 4.6 V maximum, with a pulse width not to exceed 20% tKC.

 © 2011, GSI Technology
Specifications cited are subject to change without notice. For latest documentation see http://www.gsitechnology.com.

## Capacitance

($T_A$ = 25°C, f = 1 MHz, $V_{DD}$ = 2.5 V)

| Parameter | Symbol | Test conditions | Typ. | Max. | Unit |
|---|---|---|---|---|---|
| Input Capacitance | $C_{IN}$ | $V_{IN}$ = 0 V | 4 | 5 | pF |
| Input/Output Capacitance | $C_{I/O}$ | $V_{OUT}$ = 0 V | 6 | 7 | pF |

Note:
These parameters are sample tested.

## AC Test Conditions

| Parameter | Conditions |
|---|---|
| Input high level | $V_{DD}$ – 0.2 V |
| Input low level | 0.2 V |
| Input slew rate | 1 V/ns |
| Input reference level | $V_{DD}$/2 |
| Output reference level | $V_{DDQ}$/2 |
| Output load | Fig. 1 |

Notes:
1. Include scope and jig capacitance.
2. Test conditions as specified with output loading as shown in Fig. 1 unless otherwise noted.
3. Device is deselected as defined by the Truth Table.

Output Load 1

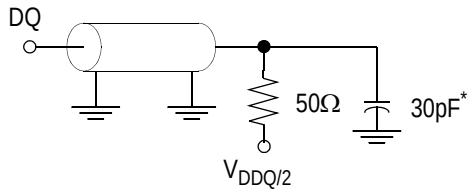


* Distributed Test Jig Capacitance

 © 2011, GSI Technology

Specifications cited are subject to change without notice. For latest documentation see http://www.gsitechnology.com.

## DC Electrical Characteristics

| Parameter | Symbol | Test Conditions | Min | Max |
|---|---|---|---|---|
| Input Leakage Current (except mode pins) | $I_{IL}$ | $V_{IN}$ = 0 to $V_{DD}$ | –1 uA | 1 uA |
| ZZ Input Current | $I_{IN1}$ | $V_{DD} \geq V_{IN} \geq V_{IH}$<br>$0\ V \leq V_{IN} \leq V_{IH}$ | –1 uA<br>–1 uA | 1 uA<br>100 uA |
| $\overline{FT}$ Input Current | $I_{IN2}$ | $V_{DD} \geq V_{IN} \geq V_{IL}$<br>$0\ V \leq V_{IN} \leq V_{IL}$ | –100 uA<br>–1 uA | 1 uA<br>1 uA |
| Output Leakage Current | $I_{OL}$ | Output Disable, $V_{OUT}$ = 0 to $V_{DD}$ | –1 uA | 1 uA |
| Output High Voltage | $V_{OH2}$ | $I_{OH}$ = –8 mA, $V_{DDQ}$ = 2.375 V | 1.7 V | — |
| Output High Voltage | $V_{OH3}$ | $I_{OH}$ = –8 mA, $V_{DDQ}$ = 3.135 V | 2.4 V | — |
| Output Low Voltage | $V_{OL}$ | $I_{OL}$ = 8 mA | — | 0.4 V |

 © 2011, GSI Technology

Specifications cited are subject to change without notice. For latest documentation see http://www.gsitechnology.com.

## Operating Currents

| Parameter | Test Conditions | Mode | | Symbol | -400 | | -375 | | -333 | | -250 | | -200 | | -150 | | Unit |
|---|---|---|---|---|---|---|---|---|---|---|---|---|---|---|---|---|---|
| | | | | | 0 to 70°C | –40 to 85°C | 0 to 70°C | –40 to 85°C | 0 to 70°C | –40 to 85°C | 0 to 70°C | –40 to 85°C | 0 to 70°C | –40 to 85°C | 0 to 70°C | –40 to 85°C | |
| Operating Current | Device Selected; All other inputs $\geq V_{IH}$ or $\leq V_{IL}$ Output open | (x32/ x36) | Pipeline | $I_{DD}$ $I_{DDQ}$ | 395 80 | 415 80 | 380 75 | 400 75 | 345 70 | 365 70 | 285 50 | 305 50 | 240 40 | 260 40 | 200 30 | 220 30 | mA |
| | | | Flow Through | $I_{DD}$ $I_{DDQ}$ | 285 50 | 305 50 | 270 50 | 290 50 | 260 45 | 280 45 | 230 40 | 250 40 | 205 35 | 225 35 | 190 30 | 210 30 | mA |
| | | (x18) | Pipeline | $I_{DD}$ $I_{DDQ}$ | 355 40 | 375 40 | 350 40 | 370 40 | 320 35 | 340 35 | 255 25 | 275 25 | 220 20 | 240 20 | 190 15 | 210 15 | mA |
| | | | Flow Through | $I_{DD}$ $I_{DDQ}$ | 265 25 | 285 25 | 250 25 | 270 25 | 235 25 | 255 25 | 215 20 | 235 20 | 185 15 | 205 15 | 175 15 | 195 15 | mA |
| Standby Current | $ZZ \geq V_{DD} - 0.2$ V | — | Pipeline | $I_{SB}$ | 55 | 75 | 55 | 75 | 55 | 75 | 55 | 75 | 55 | 75 | 55 | 75 | mA |
| | | | Flow Through | $I_{SB}$ | 55 | 75 | 55 | 75 | 55 | 75 | 55 | 75 | 55 | 75 | 55 | 75 | mA |
| Deselect Current | Device Deselected; All other inputs $\geq V_{IH}$ or $\leq V_{IL}$ | — | Pipeline | $I_{DD}$ | 100 | 120 | 100 | 120 | 100 | 120 | 100 | 120 | 100 | 120 | 100 | 120 | mA |
| | | | Flow Through | $I_{DD}$ | 100 | 120 | 100 | 120 | 100 | 120 | 100 | 120 | 100 | 120 | 100 | 120 | mA |

Notes:

1. $I_{DD}$ and $I_{DDQ}$ apply to any combination of $V_{DD3}$, $V_{DD2}$, $V_{DDQ3}$, and $V_{DDQ2}$ operation.
2. All parameters listed are worst case scenario.


© 2011, GSI Technology
Specifications cited are subject to change without notice. For latest documentation see http://www.gsitechnology.com.

## AC Electrical Characteristics

| | Parameter | Symbol | -400 | | -375 | | -333 | | -250 | | -200 | | -150 | | Unit |
|---|---|---|---|---|---|---|---|---|---|---|---|---|---|---|---|
| | | | Min | Max | Min | Max | Min | Max | Min | Max | Min | Max | Min | Max | |
| Pipeline | Clock Cycle Time | tKC | 2.5 | — | 2.66 | — | 3.3 | — | 4.0 | — | 5.0 | — | 6.7 | — | ns |
| | Clock to Output Valid | tKQ | — | 2.5 | — | 2.5 | — | 2.5 | — | 2.5 | — | 3.0 | — | 3.8 | ns |
| | Clock to Output Invalid | tKQX | 1.5 | — | 1.5 | — | 1.5 | — | 1.5 | — | 1.5 | — | 1.5 | — | ns |
| | Clock to Output in Low-Z | tLZ[1] | 1.5 | — | 1.5 | — | 1.5 | — | 1.5 | — | 1.5 | — | 1.5 | — | ns |
| | Setup time | tS | 0.9 | — | 0.9 | — | 1.0 | — | 1.2 | — | 1.4 | — | 1.5 | — | ns |
| | Hold time | tH | 0.1 | — | 0.1 | — | 0.1 | — | 0.2 | — | 0.4 | — | 0.5 | — | ns |
| Flow Through | Clock Cycle Time | tKC | 4.0 | — | 4.2 | — | 4.5 | — | 5.5 | — | 6.5 | — | 7.5 | — | ns |
| | Clock to Output Valid | tKQ | — | 4.0 | — | 4.2 | — | 4.5 | — | 5.5 | — | 6.5 | — | 7.5 | ns |
| | Clock to Output Invalid | tKQX | 2.0 | — | 2.0 | — | 2.0 | — | 2.0 | — | 2.0 | — | 2.0 | — | ns |
| | Clock to Output in Low-Z | tLZ[1] | 2.0 | — | 2.0 | — | 2.0 | — | 2.0 | — | 2.0 | — | 2.0 | — | ns |
| | Setup time | tS | 1.2 | — | 1.2 | — | 1.3 | — | 1.5 | — | 1.5 | — | 1.5 | — | ns |
| | Hold time | tH | 0.2 | — | 0.2 | — | 0.3 | — | 0.5 | — | 0.5 | — | 0.5 | — | ns |
| | Clock HIGH Time | tKH | 0.9 | — | 0.9 | — | 1.0 | — | 1.3 | — | 1.3 | — | 1.5 | — | ns |
| | Clock LOW Time | tKL | 1.1 | — | 1.1 | — | 1.2 | — | 1.5 | — | 1.5 | — | 1.7 | — | ns |
| | Clock to Output in High-Z | tHZ[1] | 1.5 | 2.5 | 1.5 | 2.5 | 1.5 | 2.5 | 1.5 | 2.5 | 1.5 | 3.0 | 1.5 | 3.8 | ns |
| | $\overline{G}$ to Output Valid | tOE | — | 2.5 | — | 2.5 | — | 2.5 | — | 2.5 | — | 3.0 | — | 3.8 | ns |
| | $\overline{G}$ to output in Low-Z | tOLZ[1] | 0 | — | 0 | — | 0 | — | 0 | — | 0 | — | 0 | — | ns |
| | $\overline{G}$ to output in High-Z | tOHZ[1] | — | 2.5 | — | 2.5 | — | 2.5 | — | 2.5 | — | 3.0 | — | 3.8 | ns |
| | ZZ setup time | tZZS[2] | 5 | — | 5 | — | 5 | — | 5 | — | 5 | — | 5 | — | ns |
| | ZZ hold time | tZZH[2] | 1 | — | 1 | — | 1 | — | 1 | — | 1 | — | 1 | — | ns |
| | ZZ recovery | tZZR | 20 | — | 20 | — | 20 | — | 20 | — | 20 | — | 20 | — | ns |

Notes:

1. These parameters are sampled and are not 100% tested.
2. ZZ is an asynchronous signal. However, In order to be recognized on any given clock cycle, ZZ must meet the specified setup and hold times as specified above.

 © 2011, GSI Technology

Specifications cited are subject to change without notice. For latest documentation see http://www.gsitechnology.com.

## Pipeline Mode Timing

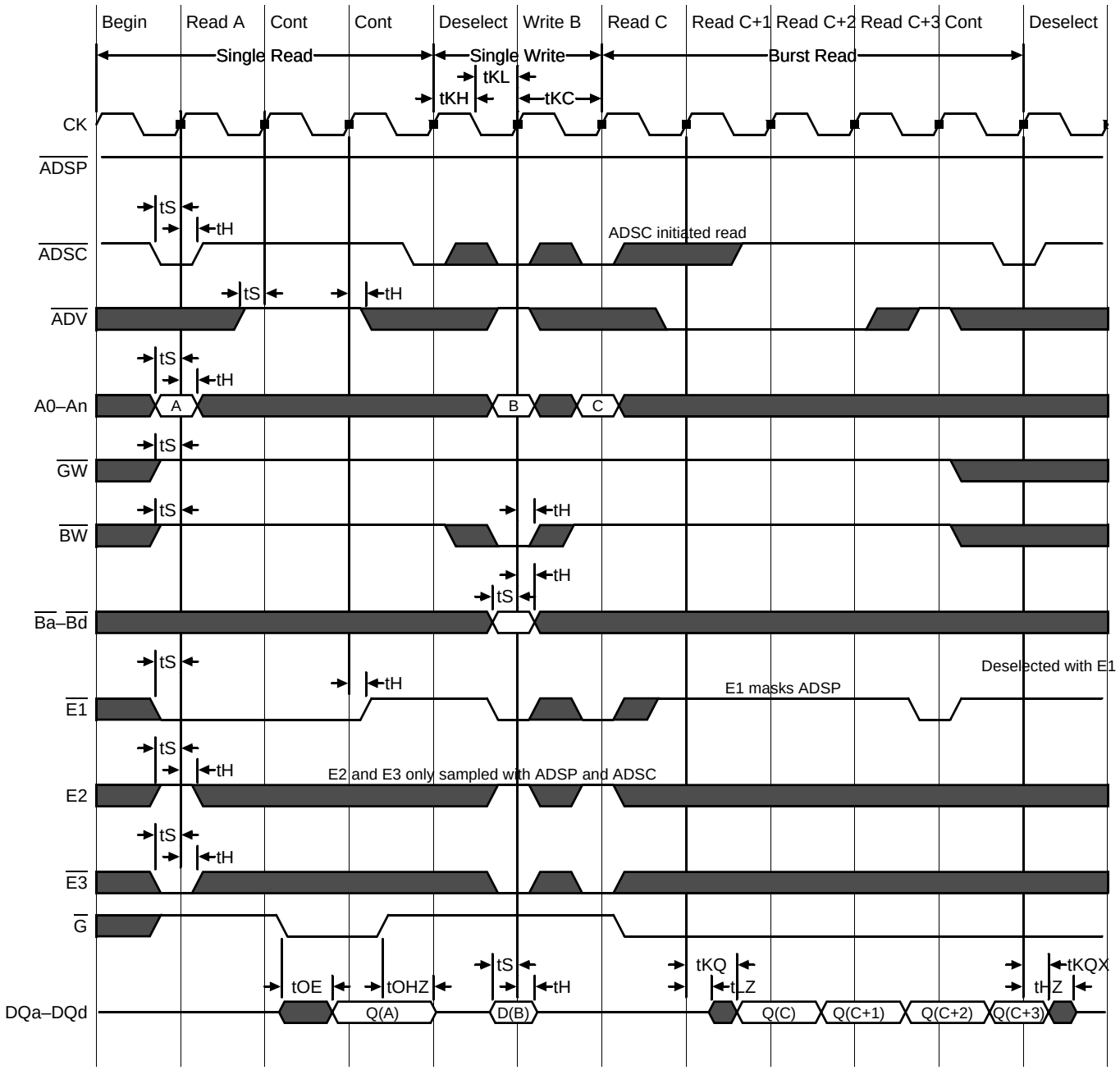


 © 2011, GSI Technology

Specifications cited are subject to change without notice. For latest documentation see http://www.gsitechnology.com.

## Flow Through Mode Timing

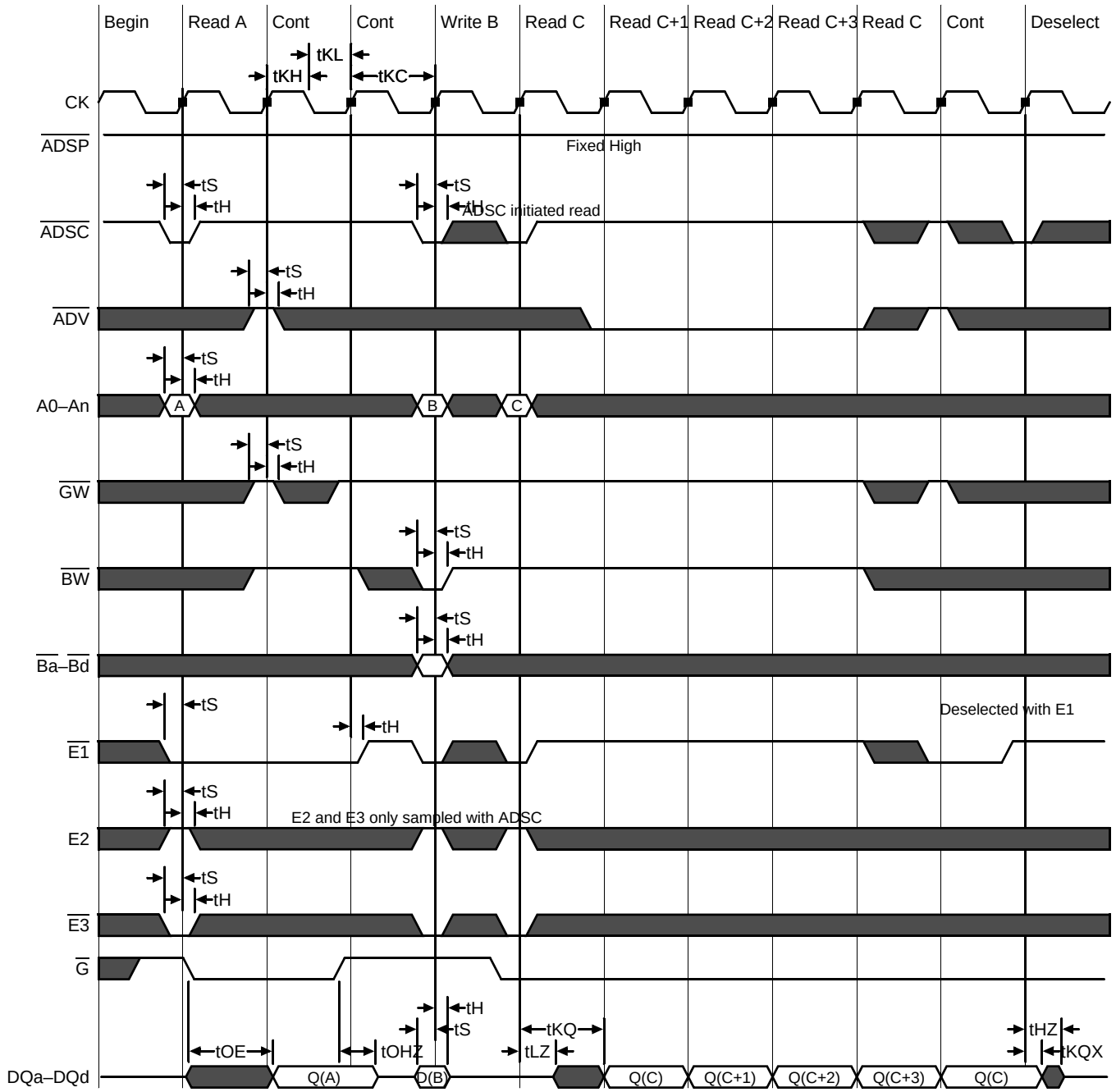


 © 2011, GSI Technology

Specifications cited are subject to change without notice. For latest documentation see http://www.gsitechnology.com.

## Sleep Mode

During normal operation, ZZ must be pulled low, either by the user or by its internal pull down resistor. When ZZ is pulled high, the SRAM will enter a Power Sleep mode after 2 cycles. At this time, internal state of the SRAM is preserved. When ZZ returns to low, the SRAM operates normally after ZZ recovery time.

Sleep mode is a low current, power-down mode in which the device is deselected and current is reduced to $I_{SB}2$. The duration of Sleep mode is dictated by the length of time the ZZ is in a High state. After entering Sleep mode, all inputs except ZZ become disabled and all outputs go to High-Z The ZZ pin is an asynchronous, active high input that causes the device to enter Sleep mode. When the ZZ pin is driven high, $I_{SB}2$ is guaranteed after the time tZZI is met. Because ZZ is an asynchronous input, pending operations or operations in progress may not be properly completed if ZZ is asserted. Therefore, Sleep mode must not be initiated until valid pending operations are completed. Similarly, when exiting Sleep mode during tZZR, only a Deselect or Read commands may be applied while the SRAM is recovering from Sleep mode.

### Sleep Mode Timing Diagram

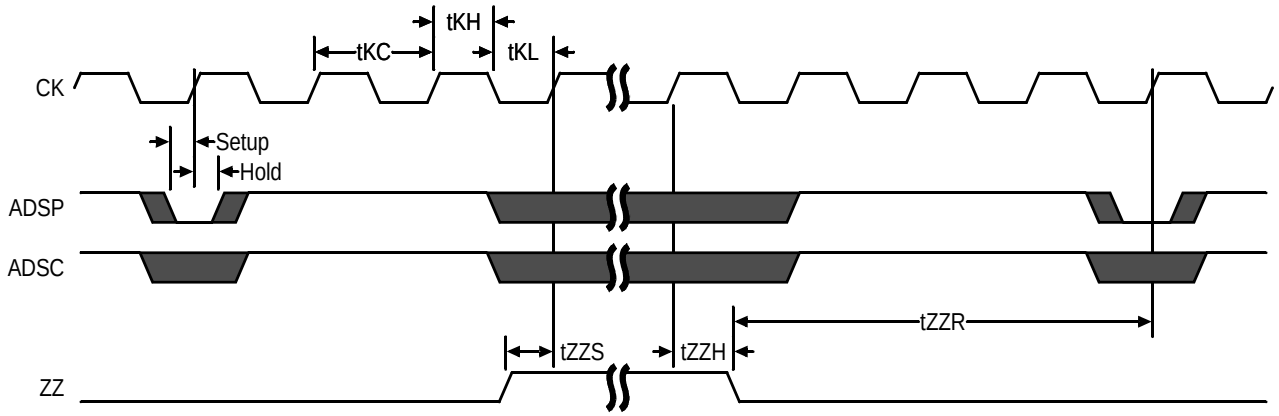


## Application Tips

### Single and Dual Cycle Deselect

SCD devices (like this one) force the use of “dummy read cycles” (read cycles that are launched normally but that are ended with the output drivers inactive) in a fully synchronous environment. Dummy read cycles waste performance but their use usually assures there will be no bus contention in transitions from reads to writes or between banks of RAMs. DCD SRAMs do not waste bandwidth on dummy cycles and are logically simpler to manage in a multiple bank application (wait states need not be inserted at bank address boundary crossings) but greater care must be exercised to avoid excessive bus contention.

## JTAG Port Operation

### Overview

The JTAG Port on this RAM operates in a manner that is compliant with IEEE Standard 1149.1-1990, a serial boundary scan interface standard (commonly referred to as JTAG). The JTAG Port input interface levels scale with $V_{DD}$. The JTAG output drivers are powered by $V_{DDQ}$.

### Disabling the JTAG Port

It is possible to use this device without utilizing the JTAG port. The port is reset at power-up and will remain inactive unless clocked. TCK, TDI, and TMS are designed with internal pull-up circuits.To assure normal operation of the RAM with the JTAG Port unused, TCK, TDI, and TMS may be left floating or tied to either $V_{DD}$ or $V_{SS}$. TDO should be left unconnected.

 © 2011, GSI Technology

Specifications cited are subject to change without notice. For latest documentation see http://www.gsitechnology.com.

## JTAG Pin Descriptions

| Pin | Pin Name | I/O | Description |
|---|---|---|---|
| TCK | Test Clock | In | Clocks all TAP events. All inputs are captured on the rising edge of TCK and all outputs propagate from the falling edge of TCK. |
| TMS | Test Mode Select | In | The TMS input is sampled on the rising edge of TCK. This is the command input for the TAP controller state machine. An undriven TMS input will produce the same result as a logic one input level. |
| TDI | Test Data In | In | The TDI input is sampled on the rising edge of TCK. This is the input side of the serial registers placed between TDI and TDO. The register placed between TDI and TDO is determined by the state of the TAP Controller state machine and the instruction that is currently loaded in the TAP Instruction Register (refer to the TAP Controller State Diagram). An undriven TDI pin will produce the same result as a logic one input level. |
| TDO | Test Data Out | Out | Output that is active depending on the state of the TAP state machine. Output changes in response to the falling edge of TCK. This is the output side of the serial registers placed between TDI and TDO. |

Note:
This device does not have a TRST (TAP Reset) pin. TRST is optional in IEEE 1149.1. The Test-Logic-Reset state is entered while TMS is held high for five rising edges of TCK. The TAP Controller is also reset automaticly at power-up.

## JTAG Port Registers

### Overview

The various JTAG registers, refered to as Test Access Port orTAP Registers, are selected (one at a time) via the sequences of 1s and 0s applied to TMS as TCK is strobed. Each of the TAP Registers is a serial shift register that captures serial input data on the rising edge of TCK and pushes serial data out on the next falling edge of TCK. When a register is selected, it is placed between the TDI and TDO pins.

### Instruction Register

The Instruction Register holds the instructions that are executed by the TAP controller when it is moved into the Run, Test/Idle, or the various data register states. Instructions are 3 bits long. The Instruction Register can be loaded when it is placed between the TDI and TDO pins. The Instruction Register is automatically preloaded with the IDCODE instruction at power-up or whenever the controller is placed in Test-Logic-Reset state.

### Bypass Register

The Bypass Register is a single bit register that can be placed between TDI and TDO. It allows serial test data to be passed through the RAM's JTAG Port to another device in the scan chain with as little delay as possible.

### Boundary Scan Register

The Boundary Scan Register is a collection of flip flops that can be preset by the logic level found on the RAM's input or I/O pins. The flip flops are then daisy chained together so the levels found can be shifted serially out of the JTAG Port's TDO pin. The Boundary Scan Register also includes a number of place holder flip flops (always set to a logic 1). The relationship between the device pins and the bits in the Boundary Scan Register is described in the Scan Order Table following. The Boundary Scan Register, under the control of the TAP Controller, is loaded with the contents of the RAMs I/O ring when the controller is in Capture-DR state and then is placed between the TDI and TDO pins when the controller is moved to Shift-DR state. SAMPLE-Z, SAMPLE/PRELOAD and EXTEST instructions can be used to activate the Boundary Scan Register.

 © 2011, GSI Technology
Specifications cited are subject to change without notice. For latest documentation see http://www.gsitechnology.com.

## JTAG TAP Block Diagram

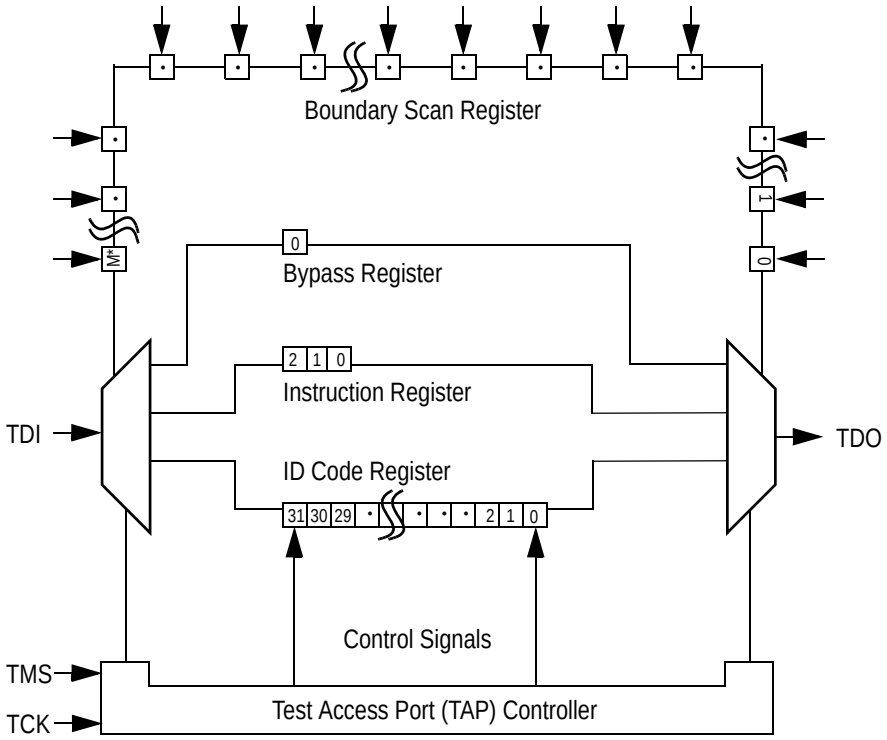


* For the value of M, see the BSDL file, which is available at by contacting us at apps@gsitechnology.com.

### Identification (ID) Register

The ID Register is a 32-bit register that is loaded with a device and vendor specific 32-bit code when the controller is put in Capture-DR state with the IDCODE command loaded in the Instruction Register. The code is loaded from a 32-bit on-chip ROM. It describes various attributes of the RAM as indicated below. The register is then placed between the TDI and TDO pins when the controller is moved into Shift-DR state. Bit 0 in the register is the LSB and the first to reach TDO when shifting begins.

## ID Register Contents

| | Not Used | | | | | | | | | | | | | | | | | | | | GSI Technology JEDEC Vendor ID Code | | | | | | | | | | | Presence Register |
|---|---|---|---|---|---|---|---|---|---|---|---|---|---|---|---|---|---|---|---|---|---|---|---|---|---|---|---|---|---|---|---|---|
| Bit # | 31 | 30 | 29 | 28 | 27 | 26 | 25 | 24 | 23 | 22 | 21 | 20 | 19 | 18 | 17 | 16 | 15 | 14 | 13 | 12 | 11 | 10 | 9 | 8 | 7 | 6 | 5 | 4 | 3 | 2 | 1 | 0 |
| | X | X | X | X | X | X | X | X | X | X | X | X | X | X | X | X | X | X | X | X | 0 | 0 | 0 | 1 | 1 | 0 | 1 | 1 | 0 | 0 | 1 | 1 |

 © 2011, GSI Technology

Specifications cited are subject to change without notice. For latest documentation see http://www.gsitechnology.com.

## Tap Controller Instruction Set

### Overview

There are two classes of instructions defined in the Standard 1149.1-1990; the standard (Public) instructions, and device specific (Private) instructions. Some Public instructions are mandatory for 1149.1 compliance. Optional Public instructions must be implemented in prescribed ways. The TAP on this device may be used to monitor all input and I/O pads, and can be used to load address, data or control signals into the RAM or to preload the I/O buffers.

When the TAP controller is placed in Capture-IR state the two least significant bits of the instruction register are loaded with 01. When the controller is moved to the Shift-IR state the Instruction Register is placed between TDI and TDO. In this state the desired instruction is serially loaded through the TDI input (while the previous contents are shifted out at TDO). For all instructions, the TAP executes newly loaded instructions only when the controller is moved to Update-IR state. The TAP instruction set for this device is listed in the following table.

JTAG Tap Controller State Diagram

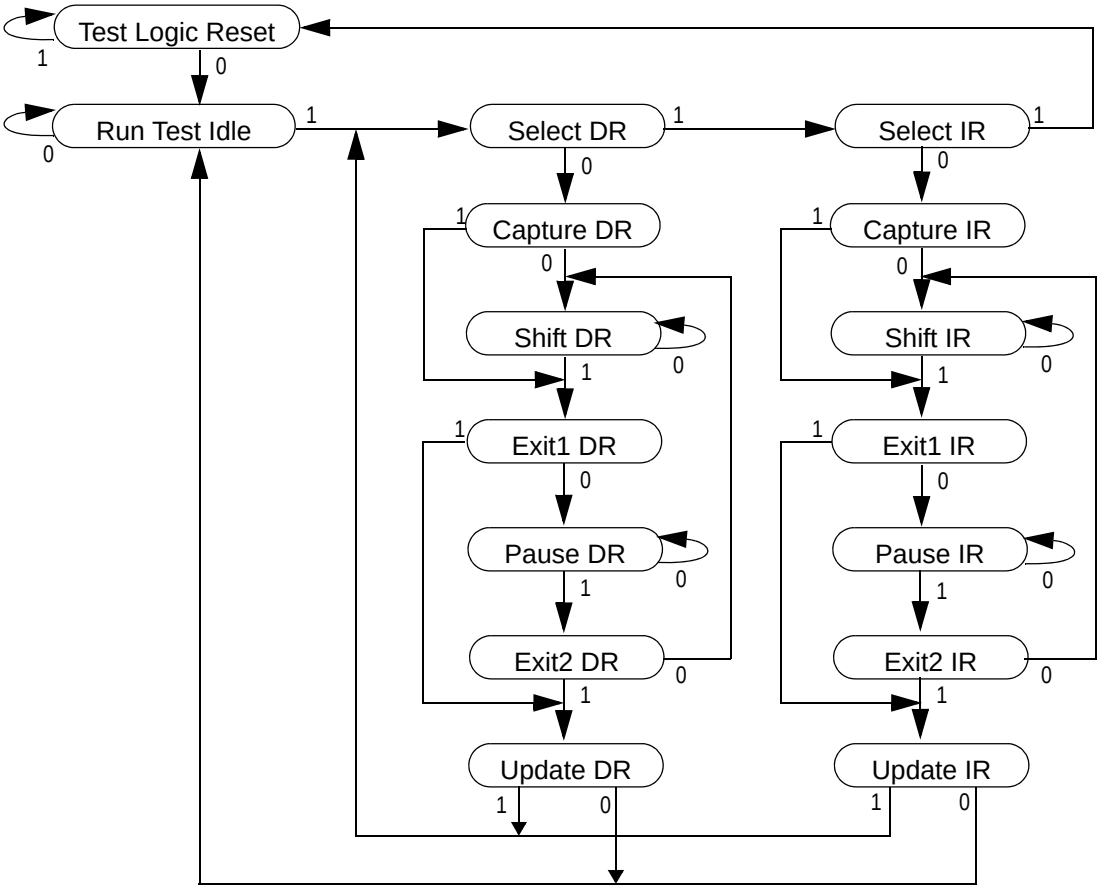


### Instruction Descriptions

#### BYPASS

When the BYPASS instruction is loaded in the Instruction Register the Bypass Register is placed between TDI and TDO. This occurs when the TAP controller is moved to the Shift-DR state. This allows the board level scan path to be shortened to facilitate testing of other devices in the scan path.

 © 2011, GSI Technology

Specifications cited are subject to change without notice. For latest documentation see http://www.gsitechnology.com.

### SAMPLE/PRELOAD

SAMPLE/PRELOAD is a Standard 1149.1 mandatory public instruction. When the SAMPLE / PRELOAD instruction is loaded in the Instruction Register, moving the TAP controller into the Capture-DR state loads the data in the RAMs input and I/O buffers into the Boundary Scan Register. Boundary Scan Register locations are not associated with an input or I/O pin, and are loaded with the default state identified in the Boundary Scan Chain table at the end of this section of the datasheet. Because the RAM clock is independent from the TAP Clock (TCK) it is possible for the TAP to attempt to capture the I/O ring contents while the input buffers are in transition (i.e. in a metastable state). Although allowing the TAP to sample metastable inputs will not harm the device, repeatable results cannot be expected. RAM input signals must be stabilized for long enough to meet the TAPs input data capture set-up plus hold time (tTS plus tTH). The RAMs clock inputs need not be paused for any other TAP operation except capturing the I/O ring contents into the Boundary Scan Register. Moving the controller to Shift-DR state then places the boundary scan register between the TDI and TDO pins.

### EXTEST

EXTEST is an IEEE 1149.1 mandatory public instruction. It is to be executed whenever the instruction register is loaded with all logic 0s. The EXTEST command does not block or override the RAM's input pins; therefore, the RAM's internal state is still determined by its input pins.

Typically, the Boundary Scan Register is loaded with the desired pattern of data with the SAMPLE/PRELOAD command. Then the EXTEST command is used to output the Boundary Scan Register's contents, in parallel, on the RAM's data output drivers on the falling edge of TCK when the controller is in the Update-IR state.

Alternately, the Boundary Scan Register may be loaded in parallel using the EXTEST command. When the EXTEST instruction is selected, the sate of all the RAM's input and I/O pins, as well as the default values at Scan Register locations not associated with a pin, are transferred in parallel into the Boundary Scan Register on the rising edge of TCK in the Capture-DR state, the RAM's output pins drive out the value of the Boundary Scan Register location with which each output pin is associated.

### IDCODE

The IDCODE instruction causes the ID ROM to be loaded into the ID register when the controller is in Capture-DR mode and places the ID register between the TDI and TDO pins in Shift-DR mode. The IDCODE instruction is the default instruction loaded in at power up and any time the controller is placed in the Test-Logic-Reset state.

### SAMPLE-Z

If the SAMPLE-Z instruction is loaded in the instruction register, all RAM outputs are forced to an inactive drive state (high-Z) and the Boundary Scan Register is connected between TDI and TDO when the TAP controller is moved to the Shift-DR state.

### RFU

These instructions are Reserved for Future Use. In this device they replicate the BYPASS instruction.

 © 2011, GSI Technology

Specifications cited are subject to change without notice. For latest documentation see http://www.gsitechnology.com.

## JTAG TAP Instruction Set Summary

| Instruction | Code | Description | Notes |
|---|---|---|---|
| EXTEST | 000 | Places the Boundary Scan Register between TDI and TDO. | 1 |
| IDCODE | 001 | Preloads ID Register and places it between TDI and TDO. | 1, 2 |
| SAMPLE-Z | 010 | Captures I/O ring contents. Places the Boundary Scan Register between TDI and TDO.<br>Forces all RAM output drivers to High-Z. | 1 |
| RFU | 011 | Do not use this instruction; Reserved for Future Use.<br>Replicates BYPASS instruction. Places Bypass Register between TDI and TDO. | 1 |
| SAMPLE/ PRELOAD | 100 | Captures I/O ring contents. Places the Boundary Scan Register between TDI and TDO. | 1 |
| GSI | 101 | GSI private instruction. | 1 |
| RFU | 110 | Do not use this instruction; Reserved for Future Use.<br>Replicates BYPASS instruction. Places Bypass Register between TDI and TDO. | 1 |
| BYPASS | 111 | Places Bypass Register between TDI and TDO. | 1 |

Notes:
1. Instruction codes expressed in binary, MSB on left, LSB on right.
2. Default instruction automatically loaded at power-up and in test-logic-reset state.

 © 2011, GSI Technology
Specifications cited are subject to change without notice. For latest documentation see http://www.gsitechnology.com.

## JTAG Port Recommended Operating Conditions and DC Characteristics (2.5/3.3 V Version)

| Parameter | Symbol | Min. | Max. | Unit | Notes |
|---|---|---|---|---|---|
| 2.5 V Test Port Input High Voltage | $V_{IHJ2}$ | 0.6 * $V_{DD2}$ | $V_{DD2}$ +0.3 | V | 1 |
| 2.5 V Test Port Input Low Voltage | $V_{ILJ2}$ | –0.3 | 0.3 * $V_{DD2}$ | V | 1 |
| 3.3 V Test Port Input High Voltage | $V_{IHJ3}$ | 2.0 | $V_{DD3}$ +0.3 | V | 1 |
| 3.3 V Test Port Input Low Voltage | $V_{ILJ3}$ | –0.3 | 0.8 | V | 1 |
| TMS, TCK and TDI Input Leakage Current | $I_{INHJ}$ | –300 | 1 | uA | 2 |
| TMS, TCK and TDI Input Leakage Current | $I_{INLJ}$ | –1 | 100 | uA | 3 |
| TDO Output Leakage Current | $I_{OLJ}$ | –1 | 1 | uA | 4 |
| Test Port Output High Voltage | $V_{OHJ}$ | 1.7 | — | V | 5, 6 |
| Test Port Output Low Voltage | $V_{OLJ}$ | — | 0.4 | V | 5, 7 |
| Test Port Output CMOS High | $V_{OHJC}$ | $V_{DDQ}$ – 100 mV | — | V | 5, 8 |
| Test Port Output CMOS Low | $V_{OLJC}$ | — | 100 mV | V | 5, 9 |

Notes:
1. Input Under/overshoot voltage must be –2 V < Vi < $V_{DDn}$ +2 V not to exceed 4.6 V maximum, with a pulse width not to exceed 20% tTKC.
2. $V_{ILJ} \leq V_{IN} \leq V_{DDn}$
3. $0\ V \leq V_{IN} \leq V_{ILJn}$
4. Output Disable, $V_{OUT}$ = 0 to $V_{DDn}$
5. The TDO output driver is served by the $V_{DDQ}$ supply.
6. $I_{OHJ}$ = –4 mA
7. $I_{OLJ}$ = + 4 mA
8. $I_{OHJC}$ = –100 uA
9. $I_{OLJC}$ = +100 uA

## JTAG Port AC Test Conditions

| Parameter | Conditions |
|---|---|
| Input high level | $V_{DD}$ – 0.2 V |
| Input low level | 0.2 V |
| Input slew rate | 1 V/ns |
| Input reference level | $V_{DDQ}/2$ |
| Output reference level | $V_{DDQ}/2$ |

Notes:
1. Include scope and jig capacitance.
2. Test conditions as shown unless otherwise noted.

JTAG Port AC Test Load

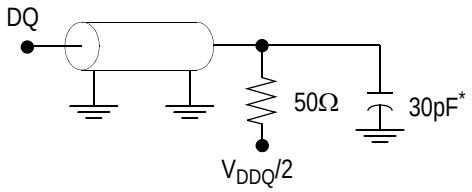


* Distributed Test Jig Capacitance

 © 2011, GSI Technology

Specifications cited are subject to change without notice. For latest documentation see http://www.gsitechnology.com.

## JTAG Port Timing Diagram

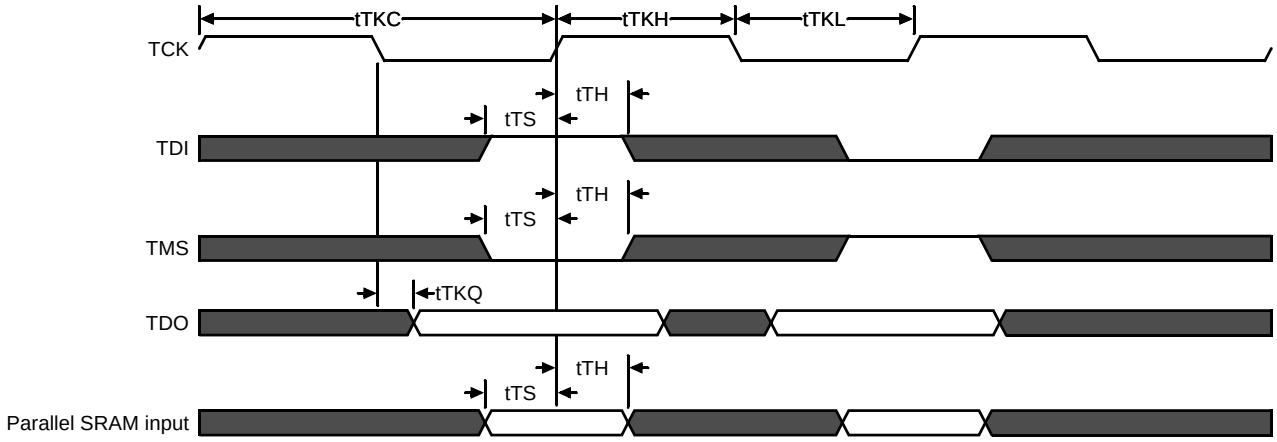


## JTAG Port AC Electrical Characteristics

| Parameter | Symbol | Min | Max | Unit |
|---|---|---|---|---|
| TCK Cycle Time | tTKC | 50 | — | ns |
| TCK Low to TDO Valid | tTKQ | — | 20 | ns |
| TCK High Pulse Width | tTKH | 20 | — | ns |
| TCK Low Pulse Width | tTKL | 20 | — | ns |
| TDI & TMS Set Up Time | tTS | 10 | — | ns |
| TDI & TMS Hold Time | tTH | 10 | — | ns |

### Boundary Scan (BSDL Files)

For information regarding the Boundary Scan Chain, or to obtain BSDL files for this part, please contact our Applications Engineering Department at: apps@gsitechnology.com.

 © 2011, GSI Technology

Specifications cited are subject to change without notice. For latest documentation see http://www.gsitechnology.com.

## Package Dimensions—165-Bump FPBGA (Package D)

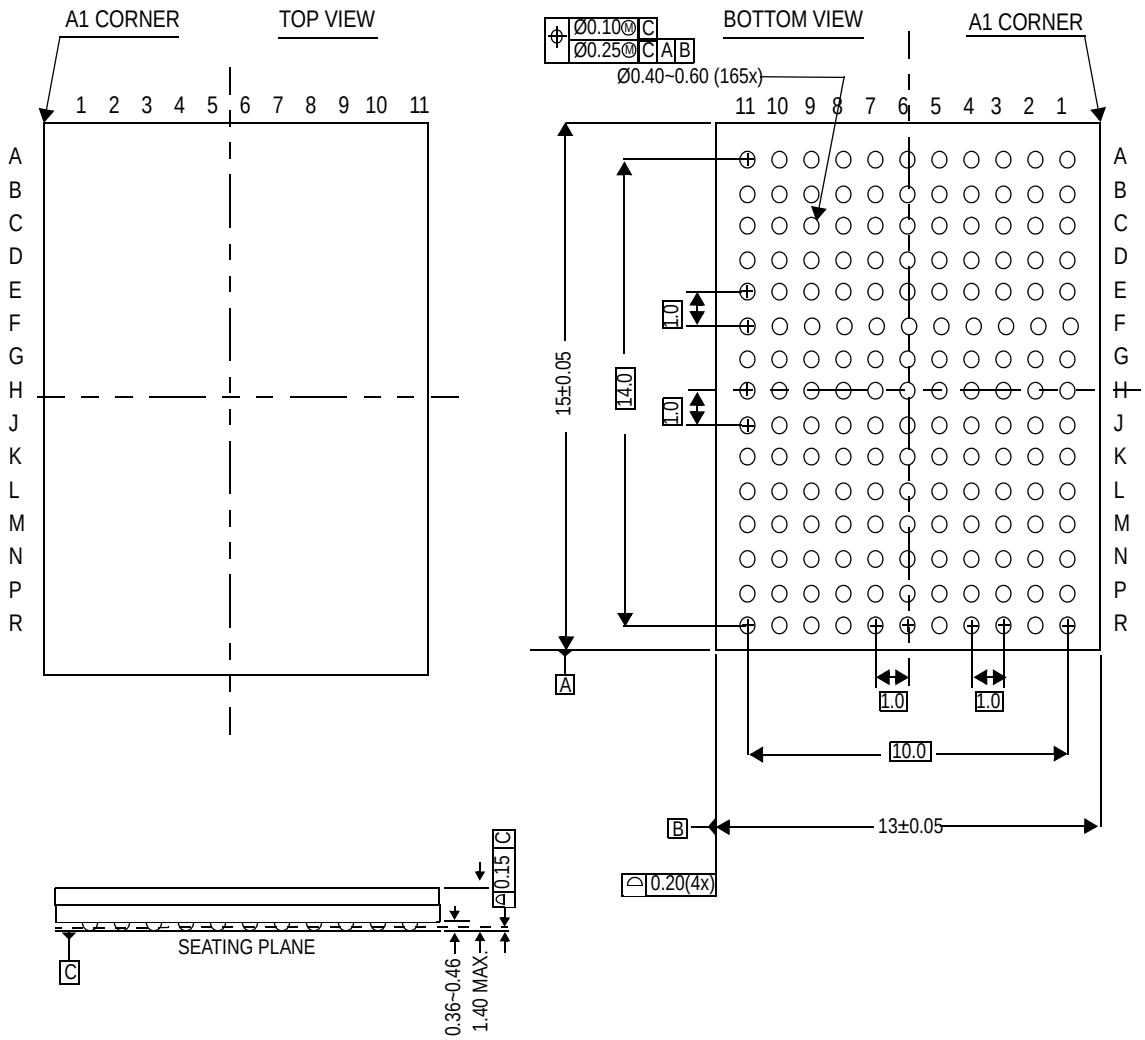


 © 2011, GSI Technology

Specifications cited are subject to change without notice. For latest documentation see http://www.gsitechnology.com.

## Ordering Information for GSI Synchronous Burst RAMs

| Org | Part Number[1] | Type | Package | Speed[2] (MHz/ns) | $T_J$[3] |
|---|---|---|---|---|---|
| 2M x 18 | GS832118AD-400 | Pipeline/Flow Through | 165 BGA | 400/4.0 | C |
| 2M x 18 | GS832118AD-375 | Pipeline/Flow Through | 165 BGA | 375/4.2 | C |
| 2M x 18 | GS832118AD-333 | Pipeline/Flow Through | 165 BGA | 333/4.5 | C |
| 2M x 18 | GS832118AD-250 | Pipeline/Flow Through | 165 BGA | 250/5.5 | C |
| 2M x 18 | GS832118AD-200 | Pipeline/Flow Through | 165 BGA | 200/6.5 | C |
| 2M x 18 | GS832118AD-150 | Pipeline/Flow Through | 165 BGA | 150/7.5 | C |
| 1M x 32 | GS832132AD-400 | Pipeline/Flow Through | 165 BGA | 333/4.5 | C |
| 1M x 32 | GS832132AD-375 | Pipeline/Flow Through | 165 BGA | 333/4.5 | C |
| 1M x 32 | GS832132AD-333 | Pipeline/Flow Through | 165 BGA | 333/4.5 | C |
| 1M x 32 | GS832132AD-250 | Pipeline/Flow Through | 165 BGA | 250/5.5 | C |
| 1M x 32 | GS832132AD-200 | Pipeline/Flow Through | 165 BGA | 200/6.5 | C |
| 1M x 32 | GS832132AD-150 | Pipeline/Flow Through | 165 BGA | 150/7.5 | C |
| 1M x 36 | GS832136AD-400 | Pipeline/Flow Through | 165 BGA | 333/4.5 | C |
| 1M x 36 | GS832136AD-375 | Pipeline/Flow Through | 165 BGA | 333/4.5 | C |
| 1M x 36 | GS832136AD-333 | Pipeline/Flow Through | 165 BGA | 333/4.5 | C |
| 1M x 36 | GS832136AD-250 | Pipeline/Flow Through | 165 BGA | 250/5.5 | C |
| 1M x 36 | GS832136AD-200 | Pipeline/Flow Through | 165 BGA | 200/6.5 | C |
| 1M x 36 | GS832136AD-150 | Pipeline/Flow Through | 165 BGA | 150/7.5 | C |
| 2M x 18 | GS832118AD-400I | Pipeline/Flow Through | 165 BGA | 333/4.5 | I |
| 2M x 18 | GS832118AD-375I | Pipeline/Flow Through | 165 BGA | 333/4.5 | I |
| 2M x 18 | GS832118AD-333I | Pipeline/Flow Through | 165 BGA | 333/4.5 | I |
| 2M x 18 | GS832118AD-250I | Pipeline/Flow Through | 165 BGA | 250/5.5 | I |
| 2M x 18 | GS832118AD-200I | Pipeline/Flow Through | 165 BGA | 200/6.5 | I |
| 2M x 18 | GS832118AD-150I | Pipeline/Flow Through | 165 BGA | 150/7.5 | I |

Notes:

1. Customers requiring delivery in Tape and Reel should add the character “T” to the end of the part number. Example: GS832118AD-200IT.
2. The speed column indicates the cycle frequency (MHz) of the device in Pipeline mode and the latency (ns) in Flow Through mode. Each device is Pipeline/Flow Through mode-selectable by the user.
3. C = Commercial Temperature Range. I = Industrial Temperature Range.
4. GSI offers other versions this type of device in many different configurations and with a variety of different features, only some of which are covered in this data sheet. See the GSI Technology web site (www.gsitechnology.com) for a complete listing of current offerings.

 © 2011, GSI Technology

Specifications cited are subject to change without notice. For latest documentation see http://www.gsitechnology.com.

## Ordering Information for GSI Synchronous Burst RAMs

| Org | Part Number[1] | Type | Package | Speed[2] (MHz/ns) | $T_J$[3] |
|---|---|---|---|---|---|
| 1M x 32 | GS832132AD-400I | Pipeline/Flow Through | 165 BGA | 333/4.5 | I |
| 1M x 32 | GS832132AD-375I | Pipeline/Flow Through | 165 BGA | 333/4.5 | I |
| 1M x 32 | GS832132AD-333I | Pipeline/Flow Through | 165 BGA | 333/4.5 | I |
| 1M x 32 | GS832132AD-250I | Pipeline/Flow Through | 165 BGA | 250/5.5 | I |
| 1M x 32 | GS832132AD-200I | Pipeline/Flow Through | 165 BGA | 200/6.5 | I |
| 1M x 32 | GS832132AD-150I | Pipeline/Flow Through | 165 BGA | 150/7.5 | I |
| 1M x 36 | GS832136AD-400I | Pipeline/Flow Through | 165 BGA | 333/4.5 | I |
| 1M x 36 | GS832136AD-375I | Pipeline/Flow Through | 165 BGA | 333/4.5 | I |
| 1M x 36 | GS832136AD-333I | Pipeline/Flow Through | 165 BGA | 333/4.5 | I |
| 1M x 36 | GS832136AD-250I | Pipeline/Flow Through | 165 BGA | 250/5.5 | I |
| 1M x 36 | GS832136AD-200I | Pipeline/Flow Through | 165 BGA | 200/6.5 | I |
| 1M x 36 | GS832136AD-150I | Pipeline/Flow Through | 165 BGA | 150/7.5 | I |
| 2M x 18 | GS832118AGD-400 | Pipeline/Flow Through | RoHS-compliant 165 BGA | 333/4.5 | C |
| 2M x 18 | GS832118AGD-375 | Pipeline/Flow Through | RoHS-compliant 165 BGA | 333/4.5 | C |
| 2M x 18 | GS832118AGD-333 | Pipeline/Flow Through | RoHS-compliant 165 BGA | 333/4.5 | C |
| 2M x 18 | GS832118AGD-250 | Pipeline/Flow Through | RoHS-compliant 165 BGA | 250/5.5 | C |
| 2M x 18 | GS832118AGD-200 | Pipeline/Flow Through | RoHS-compliant 165 BGA | 200/6.5 | C |
| 2M x 18 | GS832118AGD-150 | Pipeline/Flow Through | RoHS-compliant 165 BGA | 150/7.5 | C |
| 1M x 32 | GS832132AGD-400 | Pipeline/Flow Through | RoHS-compliant 165 BGA | 333/4.5 | C |
| 1M x 32 | GS832132AGD-375 | Pipeline/Flow Through | RoHS-compliant 165 BGA | 333/4.5 | C |
| 1M x 32 | GS832132AGD-333 | Pipeline/Flow Through | RoHS-compliant 165 BGA | 333/4.5 | C |
| 1M x 32 | GS832132AGD-250 | Pipeline/Flow Through | RoHS-compliant 165 BGA | 250/5.5 | C |
| 1M x 32 | GS832132AGD-200 | Pipeline/Flow Through | RoHS-compliant 165 BGA | 200/6.5 | C |
| 1M x 32 | GS832132AGD-150 | Pipeline/Flow Through | RoHS-compliant 165 BGA | 150/7.5 | C |
| 1M x 36 | GS832136AGD-400 | Pipeline/Flow Through | RoHS-compliant 165 BGA | 333/4.5 | C |

Notes:

1. Customers requiring delivery in Tape and Reel should add the character “T” to the end of the part number. Example: GS832118AD-200IT.
2. The speed column indicates the cycle frequency (MHz) of the device in Pipeline mode and the latency (ns) in Flow Through mode. Each device is Pipeline/Flow Through mode-selectable by the user.
3. C = Commercial Temperature Range. I = Industrial Temperature Range.
4. GSI offers other versions this type of device in many different configurations and with a variety of different features, only some of which are covered in this data sheet. See the GSI Technology web site (www.gsitechnology.com) for a complete listing of current offerings.

 © 2011, GSI Technology

Specifications cited are subject to change without notice. For latest documentation see http://www.gsitechnology.com.

## Ordering Information for GSI Synchronous Burst RAMs

| Org | Part Number[1] | Type | Package | Speed[2] (MHz/ns) | $T_J$[3] |
|---|---|---|---|---|---|
| 1M x 36 | GS832136AGD-375 | Pipeline/Flow Through | RoHS-compliant 165 BGA | 333/4.5 | C |
| 1M x 36 | GS832136AGD-333 | Pipeline/Flow Through | RoHS-compliant 165 BGA | 333/4.5 | C |
| 1M x 36 | GS832136AGD-250 | Pipeline/Flow Through | RoHS-compliant 165 BGA | 250/5.5 | C |
| 1M x 36 | GS832136AGD-200 | Pipeline/Flow Through | RoHS-compliant 165 BGA | 200/6.5 | C |
| 1M x 36 | GS832136AGD-150 | Pipeline/Flow Through | RoHS-compliant 165 BGA | 150/7.5 | C |
| 2M x 18 | GS832118AGD-400I | Pipeline/Flow Through | RoHS-compliant 165 BGA | 333/4.5 | I |
| 2M x 18 | GS832118AGD-375I | Pipeline/Flow Through | RoHS-compliant 165 BGA | 333/4.5 | I |
| 2M x 18 | GS832118AGD-333I | Pipeline/Flow Through | RoHS-compliant 165 BGA | 333/4.5 | I |
| 2M x 18 | GS832118AGD-250I | Pipeline/Flow Through | RoHS-compliant 165 BGA | 250/5.5 | I |
| 2M x 18 | GS832118AGD-200I | Pipeline/Flow Through | RoHS-compliant 165 BGA | 200/6.5 | I |
| 2M x 18 | GS832118AGD-150I | Pipeline/Flow Through | RoHS-compliant 165 BGA | 150/7.5 | I |
| 1M x 32 | GS832132AGD-400I | Pipeline/Flow Through | RoHS-compliant 165 BGA | 333/4.5 | I |
| 1M x 32 | GS832132AGD-375I | Pipeline/Flow Through | RoHS-compliant 165 BGA | 333/4.5 | I |
| 1M x 32 | GS832132AGD-333I | Pipeline/Flow Through | RoHS-compliant 165 BGA | 333/4.5 | I |
| 1M x 32 | GS832132AGD-250I | Pipeline/Flow Through | RoHS-compliant 165 BGA | 250/5.5 | I |
| 1M x 32 | GS832132AGD-200I | Pipeline/Flow Through | RoHS-compliant 165 BGA | 200/6.5 | I |
| 1M x 32 | GS832132AGD-150I | Pipeline/Flow Through | RoHS-compliant 165 BGA | 150/7.5 | I |
| 1M x 36 | GS832136AGD-400I | Pipeline/Flow Through | RoHS-compliant 165 BGA | 333/4.5 | I |
| 1M x 36 | GS832136AGD-375I | Pipeline/Flow Through | RoHS-compliant 165 BGA | 333/4.5 | I |
| 1M x 36 | GS832136AGD-333I | Pipeline/Flow Through | RoHS-compliant 165 BGA | 333/4.5 | I |
| 1M x 36 | GS832136AGD-250I | Pipeline/Flow Through | RoHS-compliant 165 BGA | 250/5.5 | I |
| 1M x 36 | GS832136AGD-200I | Pipeline/Flow Through | RoHS-compliant 165 BGA | 200/6.5 | I |
| 1M x 36 | GS832136AGD-150I | Pipeline/Flow Through | RoHS-compliant 165 BGA | 150/7.5 | I |

Notes:

1. Customers requiring delivery in Tape and Reel should add the character “T” to the end of the part number. Example: GS832118AD-200IT.
2. The speed column indicates the cycle frequency (MHz) of the device in Pipeline mode and the latency (ns) in Flow Through mode. Each device is Pipeline/Flow Through mode-selectable by the user.
3. C = Commercial Temperature Range. I = Industrial Temperature Range.
4. GSI offers other versions this type of device in many different configurations and with a variety of different features, only some of which are covered in this data sheet. See the GSI Technology web site (www.gsitechnology.com) for a complete listing of current offerings.

 © 2011, GSI Technology

Specifications cited are subject to change without notice. For latest documentation see http://www.gsitechnology.com.

## 36Mb Sync SRAM Datasheet Revision History

| File Name | Types of Changes Format or Content | Page;Revisions;Reason |
|---|---|---|
| 8321xxA_r1 | | • Creation of new datasheet |
| 8321xxA_r1_01 | Content | • Updated Absolute Maximum Ratings<br>• Added thermal information |
| 8321xxA_r1_02 | Content | • Updated to reflect MP status |
| 8321xxA_r1_03 | Content | • Updated Op current numbers |

 © 2011, GSI Technology

Specifications cited are subject to change without notice. For latest documentation see http://www.gsitechnology.com.

Компания «ЭлектроПласт» предлагает заключение долгосрочных отношений при поставках импортных электронных компонентов на взаимовыгодных условиях!

Наши преимущества:

- Оперативные поставки широкого спектра электронных компонентов отечественного и импортного производства напрямую от производителей и с крупнейших мировых складов;
- Поставка более 17-ти миллионов наименований электронных компонентов;
- Поставка сложных, дефицитных, либо снятых с производства позиций;
- Оперативные сроки поставки под заказ (от 5 рабочих дней);
- Экспресс доставка в любую точку России;
- Техническая поддержка проекта, помощь в подборе аналогов, поставка прототипов;
- Система менеджмента качества сертифицирована по Международному стандарту ISO 9001;
- Лицензия ФСБ на осуществление работ с использованием сведений, составляющих государственную тайну;
- Поставка специализированных компонентов (Xilinx, Altera, Analog Devices, Intersil, Interpoint, Microsemi, Aeroflex, Peregrine, Syfer, Eurofarad, Texas Instrument, Miteq, Cobham, E2V, MA-COM, Hittite, Mini-Circuits,General Dynamics и др.);

Помимо этого, одним из направлений компании «ЭлектроПласт» является направление «Источники питания». Мы предлагаем Вам помощь Конструкторского отдела:

- Подбор оптимального решения, техническое обоснование при выборе компонента;
- Подбор аналогов;
- Консультации по применению компонента;
- Поставка образцов и прототипов;
- Техническая поддержка проекта;
- Защита от снятия компонента с производства.

**Как с нами связаться**

**Телефон:** 8 (812) 309 58 32 (многоканальный)
**Факс:** 8 (812) 320-02-42
**Электронная почта:** org@eplast1.ru
**Адрес:** 198099, г. Санкт-Петербург, ул. Калинина, дом 2, корпус 4, литера А.