PI6C184-02

Precision 1-13 Clock Buffer

Features

- High speed, low noise non-inverting 1-13 buffer
- Supports up to four SDRAM DIMMs
- Low skew (<250ps) between any two output clocks
- I^2C Serial Configuration interface
- Multiple V_{DD}, V_{SS} pins for noise reduction
- 3.3V power supply voltage
- 28-pin SSOP and SOIC packages (H, S)

Description

The PI6C184-02 is a high-speed low-noise 1-13 non-inverting buffer designed for SDRAM clock buffer applications.

This buffer is intended to be used with the PI6C104 clock generator for Intel Architecture for both desktop and mobile systems.

At power up all SDRAM output are enabled and active. The I^2C Serial control may be used to individually activate/deactivate any of the 13 output drivers.

Note:

Purchase of I^2C components from Pericom conveys a license to use them in an I^2C system as defined by Philips.

Block Diagram

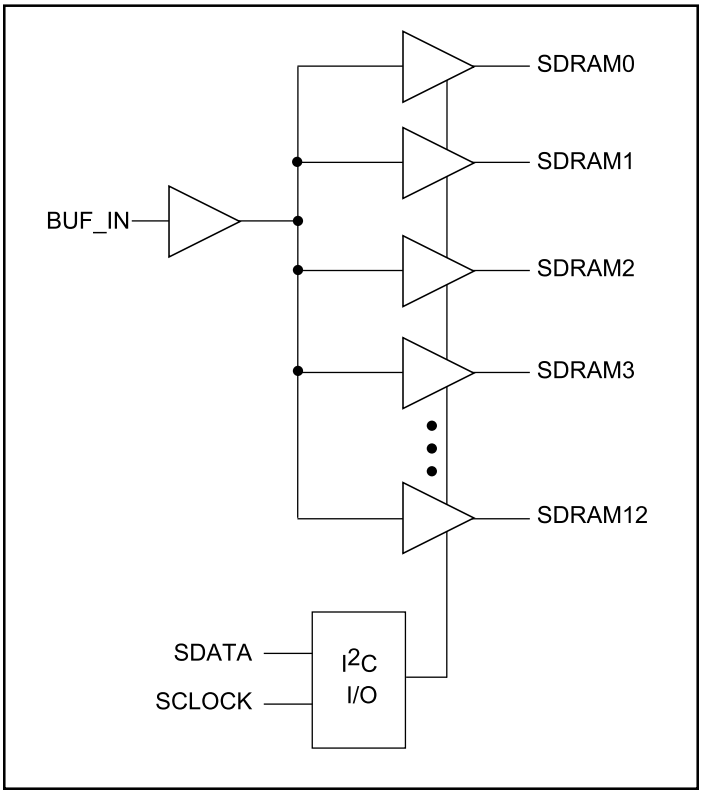

Pin Configuration

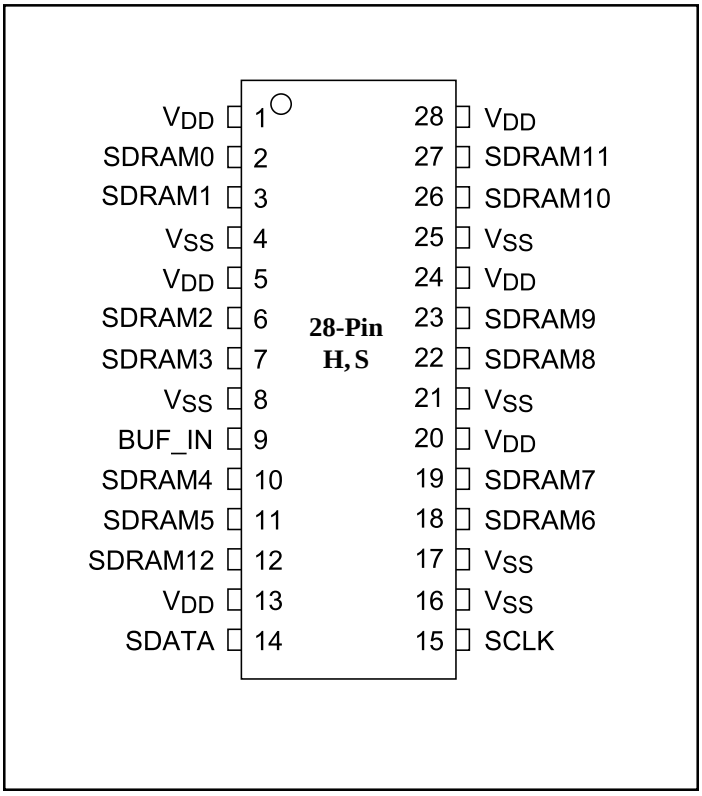

PS8319 05/03/00

Pin Description

Pin	Symbol	Type	Quantity	Description
2,3,6,7,10,11,	SDRAM [0.5]	0	6	SDRAM Byte 0 clock output
18,19,22,23,26,27	SDRAM [6.11]	0	6	SDRAM Byte 1 clock output
12	SDRAM [12]	0	1	SDRAM Byte 2 clock output
9	BUF_IN	1	1	Input for 1-13-buffer
14	SDATA	I/O	1	Data pin for I^2C circuitry. Has a 100k Internal pull-up resistor
154	SCLOCK	I/O	1	Clock pin for I^2C circuitry. Has a 100k Internal pull-up resistor
1,5,13,20,24,28	V_{DD}	Power	6	3.3V power supply for SDRAM buffer
4,8,16,17,21,25	V_{SS}	Ground	6	Ground for SDRAM Buffers

PI6C184-02 I^2C Address Assignment

A6	A5	A4	A3	A2	A1	A0	R/W
1	1	0	1	0	0	1	0

PI6C184 Serial Configuration Map

Byte0: SDRAM Active/Inactive Register
(1 = enable, 0 = disable)

Bit	Pin #	Description
Bit 7	11	SDRAM5 (Active/Inactive)
Bit 6	10	SDRAM4(Active/Inactive)
Bit 5	~	Reserved
Bit 4	~	Reserved
Bit 3	7	SDRAM3 (Active/Inactive)
Bit 2	6	SDRAM2 (Active/Inactive)
Bit 1	3	SDRAM1 (Active/Inactive)
Bit 0	2	SDRAM0 (Active/Inactive)

Note:
Inactive means outputs are held LOW and are disabled from switching

2-Wire I^{2}C Control

The I^{2}C interface permits individual enable/disable of each clock output and test mode enable.

The PI6C184-02 is a slave receiver device. It can not be read back. Sub addressing is not supported. All preceding bytes must be sent in order to change one of the control bytes.

Every bite put on the SDATA line must be 8-bits long (MSB first), followed by an acknowledge bit generated by the receiving device.
During normal data transfers Sdata changes only when SCLK is LOW. Exceptions: A HIGH to LOW transition on SDATA while SCLK is HIGH indicates a "start" condition. A LOW to HIGH transition on SDATA while SCLK is HIGH is a "stop" condition and indicates the end of a data transfer cycle.

Each data transfer is initiated with a start condition and ended with a stop condition. The first byte after a start condition is always a 7-bit address byte followed by a read/write bit. (HIGH = read from addressed device, LOW = write to addressed device). If the device's own address is detected, PI6C184-02 generates an acknowledge by pulling SDATA line LOW during ninth clock pulse, then accepts the following data bytes until another start or stop condition is detected.

Following acknowledgement of the address byte (D2), two more bytes must be sent:

1. "Command Code" byte, and
2. "Byte Count" byte.

Although the data bits on these two bytes are "don't care," they must be sent and acknowledged.

Byte1: SDRAM Active/Inactive Register (1 = enable, 0 = disable)

Bit	Pin #	Description
Bit 7	27	SDRAM11 (Active/Inactive)
Bit 6	26	SDRAM10 (Active/Inactive)
Bit 5	23	SDRAM9 (Active/Inactive)
Bit 4	22	SDRAM8 (Active/Inactive)
Bit 3	N/A	(Reserved)
Bit 2	N/A	(Reserved)
Bit 1	19	SDRAM7 (Active/Inactive)
Bit 0	18	SDRAM6 (Active/Inactive)

Byte2: Optional Register for Possible Future Requirements (1 = enable, 0 = disable)

Bit	Pin #	Description
Bit 7	N/A	(Reserved)
Bit 6	12	SDRAM12 (Active/Inactive)
Bit 5	N/A	(Reserved)
Bit 4	N/A	(Reserved)
Bit 3	N/A	(Reserved)
Bit 2	N/A	(Reserved)
Bit 1	N/A	(Reserved)
Bit 0	N/A	(Reserved)

Maximum Ratings

(Above which the useful life may be impaired. For user guidelines, not tested.)

Storage Temperature	–65°C to +150°C
Ambient Temperature with Power Applied	–0°C to +70°C
3.3V Supply Voltage to Ground Potential	–0.5V to +4.6V
DC Input Voltage	–0.5V to +4.6V

Note:
Stresses greater than those listed under MAXIMUM RATINGS may cause permanent damage to the device. This is a stress rating only and functional operation of the device at these or any other conditions above those indicated in the operational sections of this specification is not implied. Exposure to absolute maximum rating conditions for extended periods may affect reliability.

Supply Current (V_{DD} = +3.465V, Cload = max)

Symbol	Parameter	Test Condition	Min.	Typ.	Max	Units
I_{DD}	Supply Current	BUF_IN = 0 MHz			3	mA
I_{DD}	Supply Current	BUF_IN = 66.66 MHz			230	
I_{DD}	Supply Current	BUF_IN = 100.0 MHz			360	

DC Operating Specifications (V_{DD} = +3.3V ±5%, T_A = 0°C - 70°C)

Symbol	Parameter	Test Condition	Min.	Max.	Units
Input Voltage, V_{DDCORE} [0-1] = 3.3V± 5%					
V_{IH}	Input High Voltage	V_{DD}	2.0	V_{DDCORE} +0.3	V
V_{IL}	Input Low Voltage		V_{SS} –0.3	0.8	
I_{IL}	Input Leakage Current	$0 < V_{IN} < V_{DD}$	-5	+5	
V_{DD} = 3.3V ± 5%					
V_{OH}	Output High Voltage	I_{OH} = –1mA	2.4		V
V_{OL}	Output Low Voltage	I_{OL} = –1mA		0.4	
C_{IN}	Input Pin Capacitance			5	pF
C_{OUT}	Output pins Capacitance			6	
L_{PIN}	Pin Inductance			7	nH
T_A	Ambient Temperature	No Airflow	0	70	ºC

SDRAM Clock Buffer Operating Specification

Symbol	Parameter	Condition	Min.	Typ.	Max.	Units
I_{OHMIN}	Pull-up current	V_{OUT} = 2.0V	–54			mA
I_{OHMAX}	Pull-up current	V_{OUT} = 3.135V			–46	
I_{OLMIN}	Pull-down current	V_{OUT} = 1.0V	54			
I_{OLMAX}	Pull-down current	V_{OUT} = 0.4V			53	
t_{RH}SDRAM	Output rise edge rate SDRAM only	3.3V ±5% @04V-2.4V	1.5		4	V/ns
t_{FH}SDRAM	Output fall edge rate SDRAM only	3.3V ±5% @2.4V-0.4V	1.5		4	

AC Timing

Symbol	Parameter	66 MHz		100 MHz		Units
		Min.	Max.	Min.	Max.	
tSDKP	SDRAM CLK period	15.0	15.5	10.0	10.5	ns
tSDKH	SDRAM CLK high time	5.6		3.3		
tSDKL	SDRAM CLK low time	5.3		3.1		
tSDRISE	SDRAM CLK rise time	1.5	4.0	1.5	4.0	V/ns
tSDFALL	SDRAM CLK fall time	1.5	4.0	1.5	4.0	
tpLH	SDRAM Buffer LH prop delay	1.0	5.0	1.0	5.0	ns
tpHL	SDRAM Buffer HL prop delay	1.0	5.0	1.0	5.0	
tpZL,tpZH	SDRAM Buffer Enable delay	1.0	8.0	1.0	8.0	
tpLZ,tpHZ	SDRAM Buffer Disable delay	1.0	8.0	1.0	8.0	
Duty Cycle	Measured at 1.5V	45	55	45	55	%
tSDSKW	SDRAM Output to Output Skew		250		250	ps

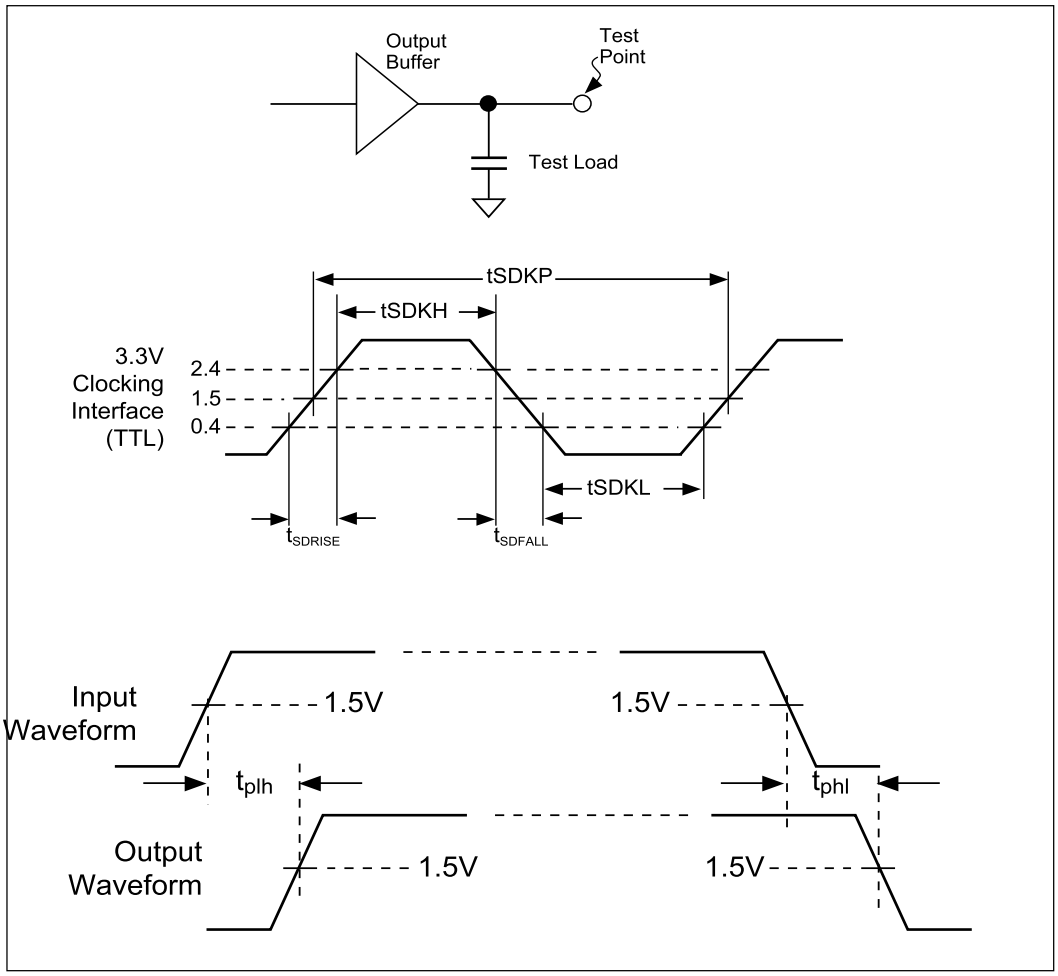

Figure 1. Clock Waveforms

Minimum and Maximum Expected Capacitive Loads

Clock	Min Load	Max Load	Units	Notes
SDRAM	20	30	pF	SDRAM DIMM Specification

Notes:

1. Maximum rise/fall times are guaranteed at maximum specified load.
2. Minimum rise/fall times are guaranteed at minimum specified load.
3. Rise/fall times are specified with pure capacitive load as shown. Testing is done with an additional 500Ω resistor in parallel.

Design Guidelines to Reduce EMI

1. Place series resistors and CI capacitors as close as possible to the respective clock pins. Typical value for CI is 10 pF. Series resistor value can be increased to reduce EMI provided that the rise and fall time are still within the specified values.
2. Minimize the number of “vias” of the clock traces.
3. Route clock traces over a continuous ground plane or over a continuous power plane. Avoid routing clock traces from plane to plane (refer to rule #2).
4. Position clock signals away from signals that go to any cables or any external connectors.

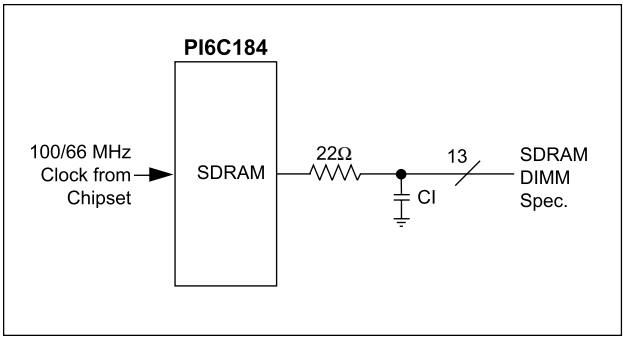

Figure 2. Design Guidelines

28-pin SSOP (H)

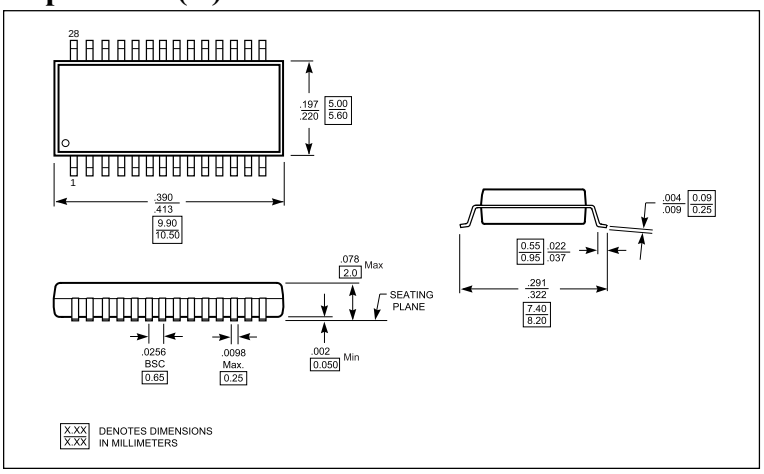

28-pin SOIC (S)

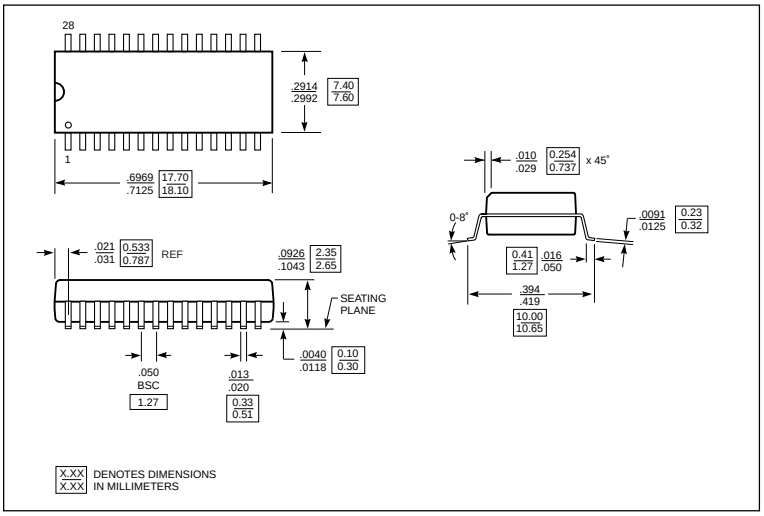

Ordering Information

P/N	Description
PI6C184-02H	28-pin SSOP Package
PI6C184-02S	28-pin SOIC Package

Pericom Semiconductor Corporation
2380 Bering Drive • San Jose, CA 95131 • 1-800-435-2336 • Fax (408) 435-1100 • http://www.pericom.com

Компания «ЭлектроПласт» предлагает заключение долгосрочных отношений при поставках импортных электронных компонентов на взаимовыгодных условиях!

Наши преимущества:

- Оперативные поставки широкого спектра электронных компонентов отечественного и импортного производства напрямую от производителей и с крупнейших мировых складов;
- Поставка более 17-ти миллионов наименований электронных компонентов;
- Поставка сложных, дефицитных, либо снятых с производства позиций;
- Оперативные сроки поставки под заказ (от 5 рабочих дней);
- Экспресс доставка в любую точку России;
- Техническая поддержка проекта, помощь в подборе аналогов, поставка прототипов;
- Система менеджмента качества сертифицирована по Международному стандарту ISO 9001;
- Лицензия ФСБ на осуществление работ с использованием сведений, составляющих государственную тайну;
- Поставка специализированных компонентов (Xilinx, Altera, Analog Devices, Intersil, Interpoint, Microsemi, Aeroflex, Peregrine, Syfer, Eurofarad, Texas Instrument, Miteq, Cobham, E2V, MA-COM, Hittite, Mini-Circuits,General Dynamics и др.);

Помимо этого, одним из направлений компании «ЭлектроПласт» является направление «Источники питания». Мы предлагаем Вам помощь Конструкторского отдела:

- Подбор оптимального решения, техническое обоснование при выборе компонента;
- Подбор аналогов;
- Консультации по применению компонента;
- Поставка образцов и прототипов;
- Техническая поддержка проекта;
- Защита от снятия компонента с производства.

Как с нами связаться

Телефон: 8 (812) 309 58 32 (многоканальный)
Факс: 8 (812) 320-02-42
Электронная почта: org@eplast1.ru
Адрес: 198099, г. Санкт-Петербург, ул. Калинина, дом 2, корпус 4, литера А.