Series 218

Half Pitch, SMD DIP Switch

- Removable tape seal to withstand IR vapor phase or wave soldering temperatures, and board washing
- Gull-wing and "J"bend terminal configurations
- Low profile actuators prevent accidental actuation
- SPST configuration available
- 0.6mm/.024" actuator travel
- Optional top tape seal for board spray washing

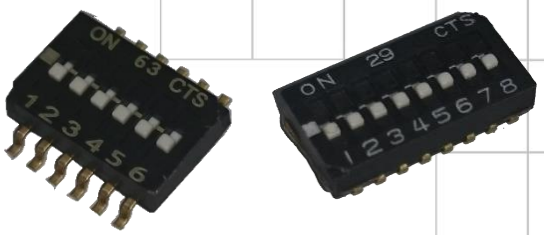

Description

Positive detent separated from contactor causes contactor does not deflect during actuation. Unique compact type design allows to be used at mini size application. Optional sealed structure is optimized for board washing during soldering process. It makes it the ideal choice for any server, security and HVAC systems

Ordering Information

Series	Number of Switch Positions	Low Profile Actuator	Bottom Epoxy Seal	Top Tape Seal	Terminal Type	Packaging Type	Actuation Preset
218-	12	LP	S	T	J	R	F

Code	No. of switch positions
2	2 positions
4	4 positions
6	6 positions
8	8 positions
10	10 positions
12	12 positions

Code	Top tape seal
Blank	No top tape seal
T	Top tape seal

Code	Spec.
Blank	Anti-static tube packaging
R	Tape & reel packaging

Code	Spec.
Blank	Gull wing terminal
J	J bend terminal

Code	Spec.
Blank	Ship at ON position
F	Ship at OFF position

Notes: Contact CTS for other common features not listed.

©2019 CTS® Corporation. Information/product(s) subject to change. No warranty that product(s) will meet the stated specifications for customer specific applications or test equipment. Visit www.ctscorp.com for list of applicable patent(s), more information, or to request a quote.

Electrical Specifications

Parameter	Conditions & Remarks	Min	Max	Unit
Circuit	SPST	2	12	position
Contact Resistance	Initial At end of life		100 100	milliohms
Insulation Resistance	Between insulated terminals	100		megohms
Dielectric Strength	350 VAC between adjacent switches		1	minute
Actuation Life	25mA @ 24 VDC		1,000	cycles
Switch Capacitance	Between adjacent closed switches		10	pF
Nonswitching Rating			100 or 50	mA or VDC

Mechanical and Environmental

Soldering	Maximum reflow temperature, 250°C for 30 seconds
MSL	Level 1
RoHS	Lead-Free. Fully compliant to RoHS Directive 2011/65/EU
Shock	Per MIL-STD-202G, method 213B, condition A(50G's) with no contact inconsistencies greater than 1 microsecond
Vibration	Per MIL-STD-202G, method 204D, condition B (.06" or 15G's between 10 HZ to 2K HZ) with no contact inconsistencies greater than 1 microsecond
Coplanarity	0.1mm/.004" maximum
Seal	Bottom epoxy seal standard Top tape seal optional
Marking	Special marking available-consult CTS
Packaging:	Standard anti-static tube packaging Optional tape and reel packaging
Operating Temperature Range	-55°C to +85°C
Storage Temperature Range	-55°C to +85°C

Soldering Profile

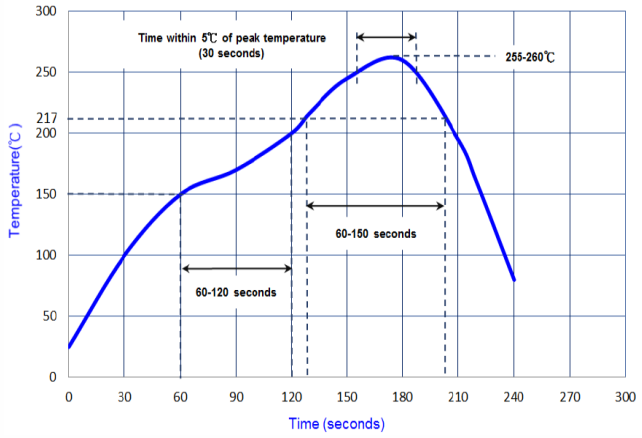

©2019 CTS® Corporation. Information/product(s) subject to change. No warranty that product(s) will meet the stated specifications for customer specific applications or test equipment. Visit www.ctscorp.com for list of applicable patent(s), more information, or to request a quote.

Mechanical Specifications

Figure 1 – Surface Mount J Bend Terminal

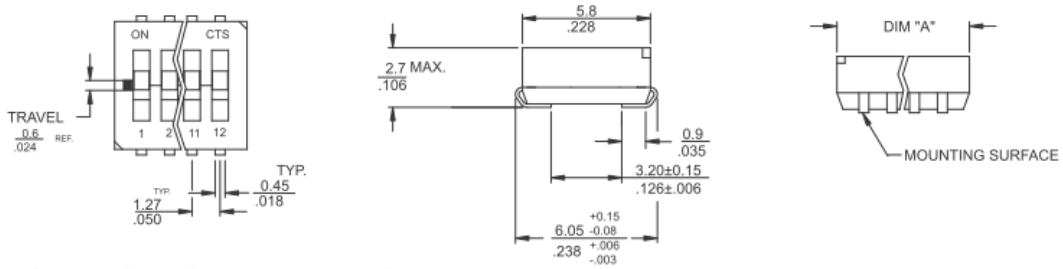

SURFACE MOUNT PAD LAYOUT

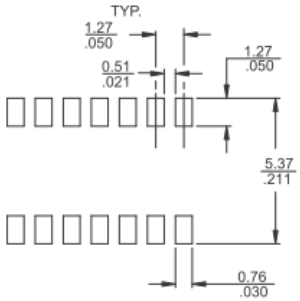

TABLE 1

NO. OF SWITCH POSITIONS	"A" OVERALL DIMENSIONS
2	3.71/.146
4	6.25/.246
6	8.79/.346
8	11.33/.446
10	13.87/.546
12	16.41/.646

Figure 2 – Surface Mount Gull Wing Terminal

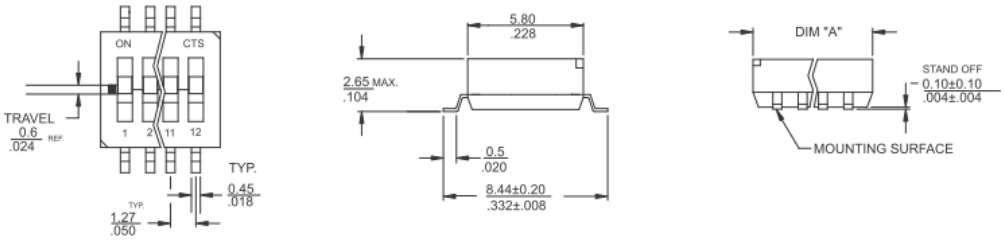

SURFACE MOUNT PAD LAYOUT

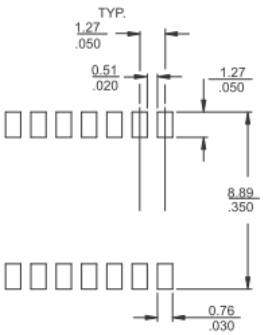

TABLE 2

NO. OF SWITCH POSITIONS	"A" OVERALL DIMENSIONS
2	3.71/.146
4	6.25/.246
6	8.79/.346
8	11.33/.446
10	13.87/.546
12	16.41/.646

DIMENSION: mm / inch

©2019 CTS® Corporation. Information/product(s) subject to change. No warranty that product(s) will meet the stated specifications for customer specific applications or test equipment. Visit www.ctscorp.com for list of applicable patent(s), more information, or to request a quote.

Packing: Tape and Reel

Unit: mm

SW Section	Fig	Bo	W	F
2	I	4.51	16.0	7.50
4	I	7.05	16.0	7.50
6	I	9.75	16.0	7.50
8	I	12.13	24.0	11.50
10	I	14.67	24.0	11.50
12	I	17.22	24.0	11.50

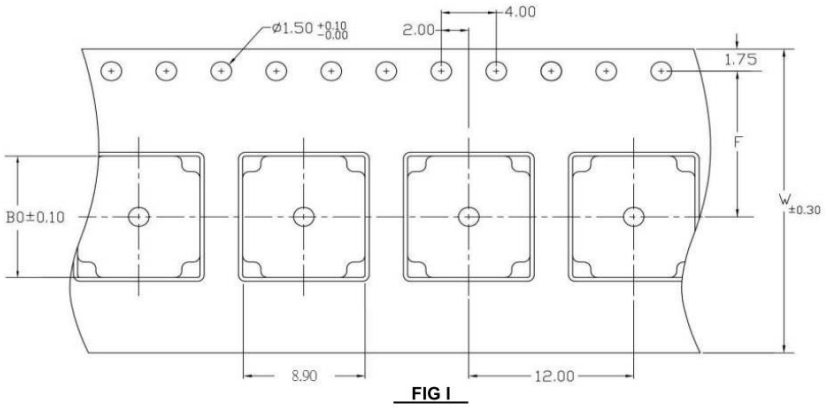

FIG I

SPECIFIED REEL PARTS DIMENSIONS:

Unit: mm

SW Section	W1	W2	W3
2	16.4	22.4 MAX.	15.9 MIN./19.5 MAX.
4	16.4	22.4 MAX.	15.9 MIN./19.5 MAX.
6	16.4	22.4 MAX.	15.9 MIN./19.5 MAX.
8	24.4	30.4 MAX.	23.9 MIN./27.4 MAX.
10	24.4	30.4 MAX.	23.9 MIN./27.4 MAX.
12	24.4	30.4 MAX.	23.9 MIN./27.4 MAX.

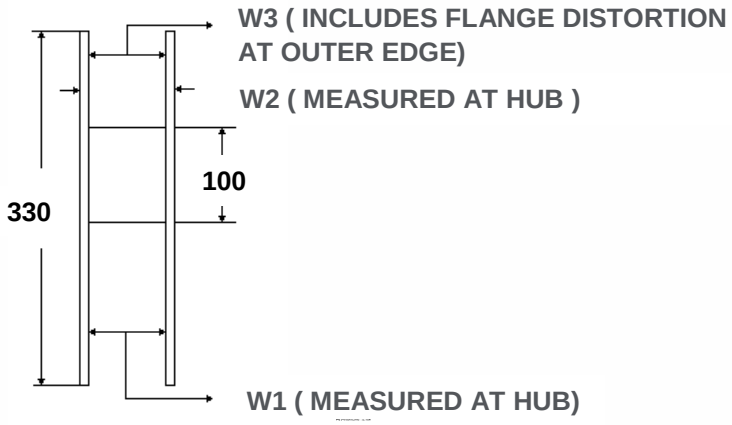

©2019 CTS® Corporation. Information/product(s) subject to change. No warranty that product(s) will meet the stated specifications for customer specific applications or test equipment. Visit www.ctscorp.com for list of applicable patent(s), more information, or to request a quote.

1. TAPE SPROCKET HOLE PITCH : 4.0 ± 0.1MM
ALL SMT ASSEMBLING MACHINES WILL PICK-UP THE COMPONENT FROM THE POINT, WHICH
IS LOCATED IN THE CENTRE OF TWO ADJACENT SPROCKET HOLES IN FEEDING DIRECTION. THIS MUST BE TAKEK INTO ACCOUNT WHEN DESIGNING THE LOCATION OF THE COMPONENT IN T&R POCKET.

2. RECOMMENDED PART ORIENTATION IN TAPE & REEL POCKET.
ORIENT SWITCH TERMINAL #1 TO THE SIDE OF ROUND SPROCKET HOLES, SEE PICTURE BELOW.

3 LENGTH OF TAPE
THERE SHALL BE A LEADER OF 400mm MINIMUM WHICH IS SEALED ONTO EMPTY CARRIER TAPE, SEE PICTURE BELOW.

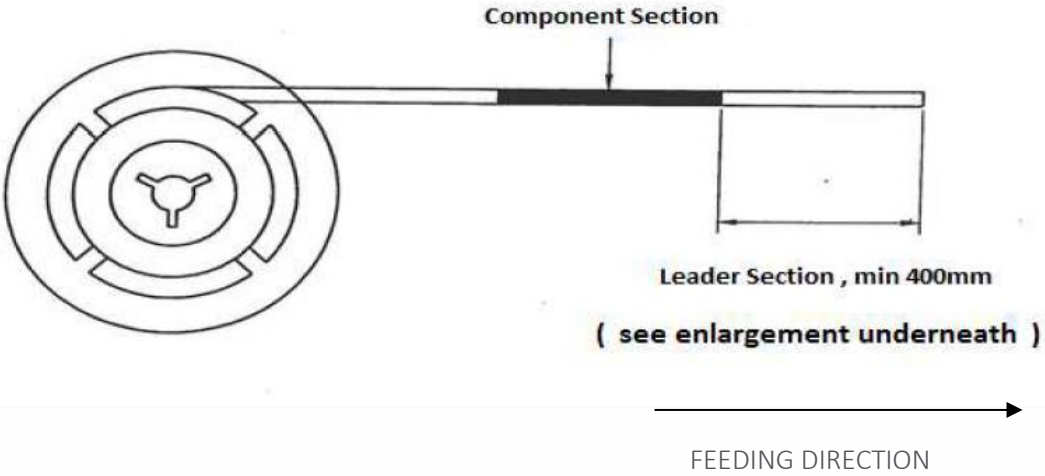

©2019 CTS® Corporation. Information/product(s) subject to change. No warranty that product(s) will meet the stated specifications for customer specific applications or test equipment. Visit www.ctscorp.com for list of applicable patent(s), more information, or to request a quote.

4. TAPE BREAK FORCE, PEEL STRENGTH AND ANGLE.
REQUIRED SETTINGS :
- TOP COVER TAPE PEEL FORCE : 10 ~ 130 gm
- ANGLE BETWEEN THE TOP COVER TAPE AND THE DIRECTION OF FEED DURING PEEL OFF : 165°~ 180°

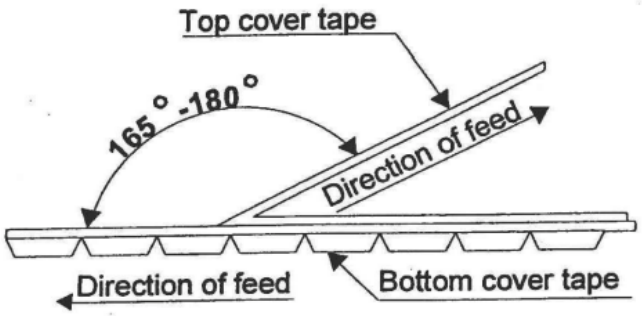

Embossed Carrier Tape

THE COVER TAPES MAY NOT EXTEND OVER THE DEGE OF THE CARRIER TAPE OR COVER ANY PART OF THE SPROCKETS HOLES.

©2019 CTS® Corporation. Information/product(s) subject to change. No warranty that product(s) will meet the stated specifications for customer specific applications or test equipment. Visit www.ctscorp.com for list of applicable patent(s), more information, or to request a quote.

Компания «ЭлектроПласт» предлагает заключение долгосрочных отношений при поставках импортных электронных компонентов на взаимовыгодных условиях!

Наши преимущества:

- Оперативные поставки широкого спектра электронных компонентов отечественного и импортного производства напрямую от производителей и с крупнейших мировых складов;
- Поставка более 17-ти миллионов наименований электронных компонентов;
- Поставка сложных, дефицитных, либо снятых с производства позиций;
- Оперативные сроки поставки под заказ (от 5 рабочих дней);
- Экспресс доставка в любую точку России;
- Техническая поддержка проекта, помощь в подборе аналогов, поставка прототипов;
- Система менеджмента качества сертифицирована по Международному стандарту ISO 9001;
- Лицензия ФСБ на осуществление работ с использованием сведений, составляющих государственную тайну;
- Поставка специализированных компонентов (Xilinx, Altera, Analog Devices, Intersil, Interpoint, Microsemi, Aeroflex, Peregrine, Syfer, Eurofarad, Texas Instrument, Miteq, Cobham, E2V, MA-COM, Hittite, Mini-Circuits,General Dynamics и др.);

Помимо этого, одним из направлений компании «ЭлектроПласт» является направление «Источники питания». Мы предлагаем Вам помощь Конструкторского отдела:

- Подбор оптимального решения, техническое обоснование при выборе компонента;
- Подбор аналогов;
- Консультации по применению компонента;
- Поставка образцов и прототипов;
- Техническая поддержка проекта;
- Защита от снятия компонента с производства.

Как с нами связаться

Телефон: 8 (812) 309 58 32 (многоканальный)
Факс: 8 (812) 320-02-42
Электронная почта: org@eplast1.ru
Адрес: 198099, г. Санкт-Петербург, ул. Калинина, дом 2, корпус 4, литера А.